CONTRACT DOCUMENTS
FOR
PUMPHOUSE #5 AND TOP OF MOUNTAIN WATER SYSTEM
LOCATED AT POWDER MOUNTAIN SKI RESORT
FOR
POWDER MOUNTAIN WATER AND SEWER IMPROVEMENT DISTRICT
POWDER MOUNTAIN, UTAH

PROJECT NO. PWM.019.21

MARCH 2022

(REV. B-ADDENDUM #2)

GILSON ENGINEERING, INC. CONSULTING ENGINEERS AND SURVEYORS

Prepared _____ James J. Milligan, P.E.

Checked _____

Approved _____ Bradley S. Gilson, P.E.

12401 South 450 East
Building C, Unit 2
Draper, Utah 84020
Phone: 801-571-9414

TABLE OF CONTENTS PAGE

00100 - Invitation To Bid 00100-1

00200 - Instructions to Bidders . . . . . 00200-1 thru 00200-4

00260 - Contractor's Qualification and Experience Affidavit . . . . . 00260-1 thru 00260-4

00410 - Bid 00410-1

00420 - Bid Schedule . . . . . 00420-1 thru 00420-7

00450 - Bid Bond . . . . . 00450-1 and 00450-2

00500 - Agreement . . . . . 00500-1 thru 00500-3

00510 - Payment Bond . . . . . 00510-1 and 00510-2

00520 - Performance Bond . . . . . 00520-1 and 00520-2

00530 - Notice of Award 00530-1

00540 - Notice to Proceed 00540-1

00560 - Change Order 00560-1

00570 - Notice of Substantial Completion 00570-1

00580 - Notice of Completion 00580-1

00700 - General Conditions
(Table of Contents Preceding)

Technical Specifications (Table of Contents Preceding)

Drawings (Enumerated in Supplemental General Conditions)

SECTION 00100

INVITATION TO BID

POWDER MOUNTAIN WATER AND SEWER IMPROVEMENT DISTRICT
298 24th Street, Suite 150
Ogden, Utah 84401

Sealed BIDS for construction of the "PUMP HOUSE #5 AND TOP OF MOUNTAIN WATER SYSTEM PROJECT, LOCATED AT POWDER MOUNTAIN SKI RESORT, --- PROJECT # PWM.019.21", will be received by the DISTRICT at the office of the DISTRICT ENGINEER, 12401 South 450 East, Unit C2, Draper, Utah 84020, until 11:00 AM, APRIL, 5, 2022; and then at said office publicly opened and read aloud. Reading of the BIDS will be broadcast Via Online Meeting (Meeting ID and Passcode; To Be Provided to all on BIDDERS LIST).

The work includes furnishing all labor, tools, materials, equipment, transportation and services required for building improvements for new pump house to be constructed, attached to, an existing culinary water pump house at the above-described location, in Weber County Utah. BASE WORK consists of the following items of work: mobilization, traffic control, and erosion control; clearing and grubbing work areas; all required general earthwork, including general excavating, backfilling, construction of embankments, grading, and compacting; furnishing, placing and compacting sub-base fill material; furnishing and placing borrow material for embankments and fill; constructing new wood frame building for new pumphouse on new concrete foundation, including all required earthwork, concrete work, metal door & frame, carpentry work, insulation, metal roof system and trim, with; plumbing system (pump and piping); controls, electric unit heaters, and electrical system supplied and installed by others; standby generator supplied and installed by others; connecting new 10-inch pump supply pipe to existing 16-inch pipe line; furnishing and installing new 10-inch water line connection to existing waterline; furnishing, placing and compacting new gravel surfaces; placing and compacting new surfaces; furnishing, including gravel road base; furnishing and installing new PRV station; and all appurtenant work; in accordance with drawings and specifications prepared by Gilson Engineering.

CONTRACT DOCUMENTS may be examined at the office of Gilson Engineering, 12401 South 450 East, Bldg. C-2, Draper, Utah.

CONTRACT DOCUMENTS can be reviewed and downloaded from DISTRICT (https://www.pmwsid.org/) website or provided via email request to Gilson Engineering at debbie@gilsonengineering.com.

Bid must be accompanied by a Bid Bond, Certified Check or Cashier's Check in the amount of 5% of the maximum bid price, drawn payable to the order of POWDER MOUNTAIN WATER AND SEWER IMPROVEMENT DISTRICT.

.

All Bids submitted shall be in conformance with the Instructions to Bidders which are included in the Contract Documents; and shall be guaranteed by the Bidder for a period of ninety (90) days from the date of Bid opening.

The District hereby reserves the right to reject any or all bids presented, to waive any informality in a bid, and to make award or refuse to make award in the interest of the DISTRICT.

Date:_____ By: _____.

SECTION 00200

INSTRUCTIONS TO BIDDERS

1. DEFINITION OF TERMS.

a. Bidder. One who submits a BID for the WORK directly to the OWNER; distinct from a sub-bidder who submits a bid to a Bidder.

b. Successful Bidder. The lowest, qualified, responsible and responsive BIDDER to whom the OWNER, on the basis of the Owner's evaluation as hereinafter provided, makes an award.

c. Bidding Documents. Documents includes the INVITATION TO BID, INSTRUCTIONS TO BIDDERS, the BID Form, and the proposed Contract Documents (including all Addenda issued prior to receipt of Bids).

d. Owner. The OWNER is the Powder Mountain Water and Sewer Improvement District, located at 298 24th Street Suite 150, Ogden, Utah 84401.

e. Project Engineer. The PROJECT ENGINEER is Gilson Engineering, located at 12401 South 450 East, Building C-2, Draper, Utah 84020.

2. BIDDING DOCUMENTS. Complete sets of BIDDING DOCUMENTS may be obtained as provided in the INVITATION TO BID. These BIDDING DOCUMENTS must be used in preparing BIDS; the OWNER does not assume any responsibility for errors or misinterpretations resulting from the use of incomplete sets of BIDDING DOCUMENTS.

3. EXAMINATION OF CONTRACT DOCUMENTS AND SITE OF WORK. Before submitting a BID, each BIDDER shall:

a. carefully examine the specifications, drawings, and other Contract Documents;

b. visit the site of the Work to become familiar with local conditions that may affect costs, progress, performance, or furnishing of the Work;

c. consider federal, state and local laws, rules and regulations that may affect costs, progress, performance, or furnishing of the Work;

d. study and carefully correlate Bidder's observations with the Contract Documents; and

e. give written notice of all conflicts, errors, or discrepancies in the Contract Documents.

The failure or omission of the BIDDER to do any of the foregoing shall in no way relieve any BIDDER from any obligation in respect to his BID.

If any BIDDER, contemplating submitting a BID for the WORK, is in doubt as to the meaning of any part of the proposed Contract Documents, or finds any discrepancies therein, such BIDDER may submit to the ENGINEER a written request for interpretation thereof no later than five (5) day prior to the date set for opening of BIDS. The BIDDER submitting such request shall be responsible for its prompt and timely delivery to the ENGINEER. Any interpretation or correction of proposed Contract Documents will be made only by Addendum; and will be mailed or delivered to each prospective Bidder of record. The OWNER will not be responsible for any other explanations or interpretations of the proposed Contract Documents.

Any reports, estimates or test results provided to BIDDERS by the OWNER or the ENGINEER are not part of the Contract Documents; and the BIDDER shall make his own interpretations, estimates, inspections, or opinions concerning matters contained therein or pertaining to the completeness thereof for the purposes of bidding on the WORK. BIDDERS shall visit the site of the WORK; and shall conduct such inspections, explorations and tests as each BIDDER deems necessary for submission of a BID. Such examinations, investigations, explorations and tests shall be performed at the BIDDER's own expense. BIDDERS shall fill all holes, cleanup and restore the site to its former condition upon completion of any such explorations or tests. BIDDERS must satisfy themselves of the accuracy of the

estimated quantities shown in the BID SCHEDULE. Inspection trips for prospective BIDDERS may be arranged by contacting the ENGINEER, phone # 801-571-9414. Submission of a BID will constitute an express representation by the BIDDER that the BIDDER has complied with every requirement of this paragraph. After the BID has been submitted, the BIDDER shall not assert that there was a misunderstanding concerning the quantities of work to be done. Without exception, the BID is premised upon performing and furnishing the WORK required by the Contract Documents and any methods or procedures required therein.

4. BID SECURITY. Each BID must be accompanied by BID Security made payable to the OWNER in an amount of five (5) percent of the BIDDER's maximum BID price; and in the form of either a BID BOND issued by a surety acceptable to the Owner, a certified check or a cashier's check. BID Security of the Successful BIDDER will be retained until such BIDDER has executed the AGREEMENT and has furnished the required Contract Security and evidence of Insurance; whereupon the BID Security will be returned. If the Successful BIDDER fails to execute and deliver the AGREEMENT, BONDS, and evidence of Insurance within five (5) days after NOTICE OF AWARD, The OWNER may annul the NOTICE OF AWARD and the BID Security of that BIDDER will be forfeited. The BID Security of all other Bidders whom the OWNER believes to have a reasonable chance of receiving the award may be retained by the OWNER until three (3) days after the effective date of the AGREEMENT. BID Security submitted with BIDS which are not competitive will be returned within ten (10) days after the date of the BID opening.

5. CONTRACT TIME AND LIQUIDATED DAMAGES. The AGREEMENT will include the requirement that the WORK be completed in Ninety (90) calendar days after the date of the NOTICE TO PROCEED. The AGREEMENT will include a stipulation that liquidated damages will be assessed in the amount of $ 600.00 per calendar day for each calendar day after the agreed completion date that the WORK is not fully certified by the DISTRICT ENGINEER as being substantially complete as defined in the Contract Documents. After the Substantial Completion, Work must be completed within 20 calendar days or Liquidated Damages will be charged at $600.00 per calendar day.

6. FORM OF BID. All BIDS shall be made on the BID Forms included with the Bidding Documents. All blank on the BID Form must be completed in ink or typewritten. No additions, deletions, or alterations shall be made to the BID Form. Any unauthorized conditions, limitations, qualifications or provisions attached to the BID may render the BID unresponsive and may cause its rejection. No telegraphic Bid or telegraphic modification of a Bid will be considered.

BIDS by corporations must be executed in the corporate name by the president or vice-president or other authorized corporate officer, accompanied by evidence of authority to sign, and the corporate seal should be affixed thereto. BIDS by partnerships shall be executed in the partnership's name and signed by a partner having authority on behalf of the partnership. All BIDS submitted must be signed by the BIDDER or the BIDDER's authorized representative. All names should be typed or printed below the signature. The BID shall contain an acknowledgment of receipt of all ADDENDA (the numbers of which must be filled in on the Bid Form). The address and telephone number of the BIDDER must be shown for communications regarding the BID.

7. SUBMISSION OF BIDS. BIDS shall be submitted at the time and place indicated in the INVITATION TO BID. BIDS shall be enclosed in a sealed envelope addressed to POWDER MOUNTAIN WATER AND SEWER IMPROVEMENT DISTRICT; and marked on the outside with "PUMPHOUSE #1 STATION PROJECT" # PWM.010.20 - PHASE II"; and the name, address, and license number of the BIDDER. BID must be accompanied by the Bid Security and all other required documents. Only the original signed copy of the BID shall be submitted. If forwarded by mail, the sealed envelope containing the BID must be enclosed in another envelope addressed to the OWNER at PO Box 6156 Clearfield, Utah 84089-6156. Any Bids received after the scheduled closing time for receipt of BIDS will not be accepted or considered and will be returned to the BIDDER unopened.

8. MODIFICATION AND WITHDRAWAL OF BIDS. BIDS may be modified or withdrawn by the BIDDER by means of a written request, signed by the BIDDER or his duly authorized representative. Such written request must be delivered to the place stipulated in the INVITATION TO BID for receipt of BIDS prior to the opening of BIDS or authorized postponement thereof.

If, within twenty-four (24) hours after BIDS are opened, any BIDDER files a duly signed, written notice with the OWNER and promptly thereafter demonstrates to the reasonable satisfaction of the OWNER that there was a material and substantial mistake in the preparation on its BID, that BIDDER may withdraw its BID and the BID Security will be returned. Thereafter, that BIDDER will be disqualified from further bidding on the WORK to be provided under the Contract Documents.

Except as provided above, no BIDDER may withdraw a BID within sixty (60) days after the actual date of the opening thereof. Should there be reasons why the contract cannot be awarded within the specified period, the time may be extended by mutual agreement between the OWNER and the BIDDER.

9. OPENING OF BIDS. BIDS will be opened as indicated in the INVITATION TO BID and, unless obviously non-responsive, read aloud publicly. All BIDS will remain subject to acceptance for sixty (60) days after the day of the BID Opening; but the OWNER may, in its sole discretion, release any BID and return the BID Security prior to that date.

10. DETERMINATION OF BID AMOUNT. Determination of the total amount of the BID shall be based on the correct extension and addition of BID SCHEDULE items. Discrepancies in the multiplication of units of work and unit prices will be resolved in favor of the unit prices. Discrepancies between the indicated sum of any column of any figures and the correct sum thereof will be resolved in favor of the correct sum.

11. AWARD OF CONTRACT. The OWNER reserves the right to reject any and all BIDS, to waive any and all informalities not involving price, time, or changes in the WORK, and to negotiate contract terms with the Successful BIDDER; and the right to disregard all nonconforming, non-responsive, unbalanced, or conditional BIDS. The OWNER further reserves the right to reject the BID of any BIDDER if the OWNER believes it would not be in the best interest of the Project to make an award to that BIDDER, whether because that BID is non-responsive or the BIDDER is unqualified or of doubtful financial ability or fails to meet any other pertinent standards or criteria established by the OWNER.

To demonstrate qualifications to perform the work, each BIDDER must be prepared to submit, within five (5) days of the OWNER's request, written evidence, such as financial statements, previous work experience, present commitments, and other such information and data as may be required. BIDDERS must hold an appropriate, valid Contractor's license and be properly qualified to do business in the Spanish Fork area.

The OWNER may consider the qualifications and experience of sub-contractors, suppliers and other organizations or persons proposed for portions of the WORK. The apparent low BIDDER shall supply the names and addresses of suppliers, subcontractors and other persons for portions of the work when requested to do so by the OWNER. The OWNER may also consider the operating costs, maintenance requirements, performance data, and guarantees of major items of the materials and equipment proposed for incorporation into the WORK when such data is required to be submitted prior to the NOTICE OF AWARD.

The OWNER may conduct such investigations as the OWNER deems necessary or desirable to assist in the evaluation of any BID to establish the responsibility, qualifications and financial ability of BIDDER, proposed subcontractors, suppliers, and other persons and organizations to perform and furnish the WORK in accordance with the Contract Documents to the OWNER's satisfaction within the prescribed time.

If the Contract is to be awarded, it will be awarded to the lowest, responsible BIDDER whose evaluation by the OWNER indicates to the OWNER that the award will be in the best interest of the City.

If the Contract is to be awarded, the OWNER will give the Successful BIDDER a NOTICE OF AWARD within sixty (60) days after the date of the BID opening, unless a longer waiting period before award is expressly provided in the INVITATION TO BID.

12. EXECUTION OF AGREEMENT. The form of AGREEMENT which the Successful BIDDER will be required to execute is included in the Contract Documents. The BIDDER to whom the AWARD OF CONTRACT is made shall, within TEN (10) calendar days after the NOTICE OF AWARD from the OWNER, execute the AGREEMENT on the form provided, secure and furnish to the OWNER all insurance and all bonds required by the Contract Documents and the signed AGREEMENT. All bonds and certificates of insurance shall be submitted to and approved by the OWNER before the Successful BIDDER may proceed with the WORK. Failure or refusal to enter into and deliver the AGREEMENT as herein provided or to comply with any of the requirements connected thereto shall be just cause for annulment of the award and the forfeiture of the BID security. If the Successful BIDDER refuses or fails to execute the AGREEMENT, the OWNER may award the Contract to the next lowest, responsible BIDDER.

13. CONTRACT SECURITY. When the Successful BIDDER delivers the executed AGREEMENT to the OWNER, it must be accompanied by the required Labor and Materials PAYMENT BOND and a PERFORMANCE BOND, each in the amount of ONE HUNDRED (100) PERCENT of the Contract Price and each on the forms provided in the Contract Documents or accepted form. These BONDS shall be issued by a surety acceptable to the Owner and the cost of such BONDS shall be included in the BID. Attorneys-in-fact who sign BID BONDS or PAYMENT BONDS and PERFORMANCE BONDS must file with each BOND a certified and effective dated copy of their Power-of-Attorney.

14. INSURANCE. When the Successful BIDDER delivers the executed AGREEMENT to the OWNER, it must be accompanied by the required insurance as evidenced by certificates of insurance issued by a reputable insurance company acceptable to the Owner.

15. EXECUTION BY OWNER. Within TEN (10) calendar days of receipt of the signed AGREEMENT from the Successful BIDDER, together with the required Contract Security and insurance in a form acceptable to the OWNER, the OWNER shall cause its duly authorized representative to execute the AGREEMENT and the OWNER shall deliver one fully signed AGREEMENT to the Successful BIDDER. Each counterpart of the AGREEMENT shall be executed by the OWNER and the Successful BIDDER.

16. NOTICE TO PROCEED. A NOTICE TO PROCEED shall be issued within TEN (10) day of the execution of the AGREEMENT by the OWNER. Should there be reasons why the NOTICE TO PROCEED cannot be issued within such period, the time may be extended by mutual agreement between the OWNER and CONTRACTOR. If the NOTICE TO PROCEED has not been issued within the TEN (10) day period or within the period mutually agreed upon, the CONTRACTOR may terminate the AGREEMENT without further liability on the part of either party.

17. CLAIMS BY BIDDER. By submitting a BID, each BIDDER agrees to waive any claim it has or may have against the OWNER, the Engineer, and their respective employees, arising out of or in connection with the administration, evaluation or recommendations of any BID.

18. SRF SPECIAL CONDITIONS. BIDDER is required to comply with the SRF SPECIAL CONDITIONS as described within the contract documents (See Division 01 – General Requirements).

SECTION 00260

CONTRACTOR'S QUALIFICATION AND EXPERIENCE AFFIDAVIT

The BIDDER shall furnish all of the following information. Failure to comply with this requirement will render the BID non-responsive and will cause its rejection. Additional sheets shall be attached as required.

Award of Contract will be based upon review and evaluation of this Affidavit.

A. Contractor's name and address:

_____

_____

_____

B. Contractor's Telephone Number: _____Fax_____

C. Contractor's Email Address:_____

D. Contractor's License: Primary Classification _____

State License No. _____

Supplemental Classification held, if any: _____

E. Number of years as a contractor in Construction Work of this type: _____

F. Names and titles of Principal Officers of Contractor's Firm:

Name	Title

G. Name of person who inspected site of proposed work for your firm:

Name: _____ Date of Inspection: _____

H. Name, address, and telephone number of surety company and agent who will provide the required bonds on this Contract:

_____

_____

I. List of current jobs now under construction:

Client	Telephone No.	Dollar Amount.	Type of Job

J. List two projects of this size and complexity completed within the last five years:

Client	Telephone No.	Dollar Amount.	Type of Job

K. List history of similar projects with PMWSID:

Project	Project History	Was City Satisfied with Work?

L. List History of Product to be used on the Project:

_____

_____

M. List History of service for Product to be used on the Project:

_____

_____

N. Have you ever failed to complete any work awarded to your company? If so, when, where and why?

_____

O. List your major equipment available for this Contract:

_____ _____

_____ _____

_____ _____

_____ _____

_____ _____

P. List projects that you have failed to complete on the original schedule over the past two years:

Client	Telephone No.	Dollar Amount.	Type of Job

Q. List projects that you have failed to complete on the adjusted schedule over the past two years:

Client	Telephone No.	Dollar Amount.	Type of Job

R. Submit a copy of OSHA 300 for the past two years.

S. Submit a copy of citation history from OSHA for past two years.

T. Have you had any problems with OSHA in the last two years? If so, identify the problems and specify how the problems were resolved.

U. Are you in compliance with all applicable laws and governmental regulations? _____

V. Will you complete the project on time, as specified? _____

LIST OF SUBCONTRACTORS

The BIDDER shall list below the names and business address of each subcontractor who will perform Work under this Contract in excess of five percent (0.05) of the total bid price; and shall also list the portion of the Work which will be done by such subcontractor. After the opening of proposals, no changes or substitutions will be allowed without the written approval of the Engineer. Note: Attach additional sheets if required.

	WORK TO BE PERFORMED	SUBCONTRACTOR'S NAME AND ADDRESS
1.		
2.		
3.		
4.		
5.		
6.		

Respectively Submitted:

Signature	Address
Title	Date
Contractor License No.	Taxpayer Identification No.

SECTION 00410

BID

Proposal of _____ (hereinafter called "BIDDER"), organized and existing under the laws of the State of _____ doing business as _____.*

To POWDER MOUNTAIN WATER AND SEWER IMPROVEMENT DISTRICT, (hereinafter called "OWNER").

Hereby proposes to perform all WORK for construction of the "PUMPHOUSE #5 AND TOP OF MOUNTAIN WATER SYSTEM --- PROJECT # PMW.019.21, in strict accordance with the CONTRACT DOCUMENTS and DISTRICT'S TECHNICAL SPECIFICATIONS AND DRAWINGS, within the time set forth therein, and at the prices stated herein.

By submission of this BID, each BIDDER certifies, and in the case of a joint BID each party thereto certifies as to his own organization, that this BID has been arrived at independently, without consultation, communication, or agreement as to any matter relating to this BID with any other BIDDER or with any competitor.

BIDDER hereby agrees to commence WORK under this contract on or before a date to be specified in the NOTICE TO PROCEED and to fully complete the PROJECT within ONE HUNDRED FIFTY (150) calendar days thereafter. BIDDER further agrees to pay as liquidated damages, the sum of $ 600.00 for each calendar day thereafter.

BIDDER acknowledges receipt of the following ADDENDUM:

ADDENDUM #1
ADDENDUM #2

* Insert "a corporation", "a partnership"' or "an individual" as applicable.

Bond Number: _____

SECTION 00450

BID BOND

KNOW ALL MEN BY THESE PRESENTS, that we, the undersigned,_____ as principal, and _____ as Surety, are hereby held and firmly bound unto _____ as OWNER in the penal sum of _____ for the payment of which, well and truly to be made, we hereby jointly and severally bind ourselves, successors, and assigns.

Signed this _____ day of _____, 20___.

The condition of the above obligation is such that whereas the Principal has submitted to _____ a certain BID, attached hereto and hereby made a part hereof to enter into a contract in writing, for the _____ _____. NOW, THEREFORE,

(a) If said BID shall be rejected; or

(b) If said BID shall be accepted and the Principal shall execute and deliver a contract in the Form of Contract attached hereto (properly completed in accordance with said BID) and shall furnish a BOND for his faithful performance of said Contract, and for the payment of all persons performing labor or furnishing materials in connection therewith, and shall in all other respects perform the agreement created by the acceptance of said BID, then this obligation shall be void, otherwise the same shall remain in force and effect: it being expressly understood and agreed that the liability of the Surety for any and all claims hereunder shall, in no event, exceed the penal amount of this obligation as herein stated.

The Surety, for value received, hereby stipulates and agrees that the obligations of said Surety and its BOND shall be in no way impaired or affected by any extension of the time within which the OWNER may accept such BID; and said Surety does hereby waive notice of any such extension.

IN WITNESS WHEREOF, the Principal and the Surety have hereunto set their hands and seals, and such of them as are corporations have caused their corporate seals to be hereto affixed and these presents to be signed by their proper officers, the day and year first set forth above.

_____ (L.S.)
Principal

_____
Surety

By: _____

IMPORTANT – Surety companies executing bonds must appear on the Treasury Department's most current list (Circular 570, as amended) and be authorized to transact business in the state where the PROJECT is located.

00420 BID SCHEDULE

3/31/2022

TOP OF MOUNTAIN WATER SYSTEM AND PUMPHOUSE #5 PROJECT

NO.	ITEM	QTY	UNIT	UNIT PRICE	BID TOTAL
1	MOBILIZATION	1	LUMP		
2	TRAFFIC CONTROL	1	LUMP		
3	CONSTRUCT AND MAINTAIN EROSION CONTROL: BMP'S	1	LUMP		
4	GENERAL SITE WORK AT PUMPHOUSE #5 SITE AND PIPELINES, COMPLETE INCLUDING CLEARING AND GRUBBING, GENERAL EXCAVATION, GRADING, BACKFILL, AND ALL APPURTENANT WORK	1	LUMP		
5	GENERAL SITE WORK AT NORTH ACCESS ROAD, COMPLETE INCLUDING CLEARING AND GRUBBING, GENERAL EXCAVATION, GRADING, BACKFILL, AND ALL APPURTENANT WORK	1	LUMP		
6	COMPLETE INVESTIGATIVE POTHOLES TO LOCATE EXISTING WATER PIPELINE, UTILITY CROSSINGS, AND OTHER MISC. UTILITIES REQUIRED, COMPLETE	14	EA		
7	FURNISH AND INSTALL PUMPHOUSE PLUMBING INCLUDING; DUCTILE IRON PIPE, FITTINGS, AND ALL APPURTENANCES FROM CONNECTION TO EXISITNG PIPELINE OUTSIDE OF NEW BUILDING AND ALL PIPING INSIDE BUILDING, COMPLETE	1	LUMP		
8	NOT USED				
9	FURNISH AND INSTALL; 1500 GPM PUMP (TDH=120-FT) (75 HP) (PENTAIR AURORA 413 SERIES 8X8X11) UL LISTED FIRE PUMP REQ'D W/ CONCRETE PEDESTAL, AND ALL APPURTENANCES, COMPLETE *(NOTE: PUMP CONTROLS WITH VFD AND ELECTRICAL EQUIPMENT FOR PUMPS SHALL BE FURNISHED AND INSTALLED BY OTHERS)*	1	LUMP		
10	FURNISH AND INSTALL; SKID MOUNTED PUMP STATION WITH GRUNDFOS PUMPS; TWO PUMPS (HYDRO MPC-E 2CRE) (20 GPM @ TDH=150') (5 HP) SYSTEM INCLUDES: UPSTREAM; ISOLATION VALVE AND PRESSURE GAUGE, DOWNSTREAM; CHECK VALVE ISOLATION VALVE AND PRESSURE GAUGE W/ CONCRETE PEDESTAL, AND ALL APPURTENANCES, COMPLETE *(NOTE: ELECTRICAL EQUIPMENT FOR PUMPS SHALL BE FURNISHED AND INSTALLED BY OTHERS)*	1	LUMP		
11	CONSTRUCT NEW WOOD FRAMED PUMP HOUSE, GENERATOR ROOM, AND PUMP TO WASTE ENCLOSURE ON NEW CONCRETE FOUNDATION, COMPLETE, INCLUDING MODIFICATIONS TO EXISTING PUMPHOUSE AND; ALL REQUIRED STRUCTURAL EARTHWORK, CONCRETE WORK AND REINFORCEMENT, METAL DOORS AND FRAMES, CARPENTRY WORK, INSULATION, METAL ROOF SYSTEM & TRIM, STEEL STEPS, AND ALL APPURTENANT WORK *(NOTE: ELECTRICAL EQUIPMENT FOR BUILDING INCLUDING; OUTLETS, LIGHTING, HEATERS, EXHAUST FANS, AND GENERATOR(S) SHALL BE FURNISHED AND INSTALLED BY OTHERS)*	1	LUMP		
12	CONSTRUCT PUMP PEDESTAL, COMPLETE	2	EA		
13	CONSTRUCT 6" THICK CONCRETE PAD SITE IMPROVEMENTS, COMPLETE	75	SF		

BIDDER agrees to perform all the work described in the CONTRACT DOCUMENTS for the following unit prices or lump sum prices.

NOTE: BIDS shall include sales tax and all other applicable taxes and fees.

00420 BID SCHEDULE

3/31/2022

TOP OF MOUNTAIN WATER SYSTEM AND PUMPHOUSE #5 PROJECT

NO.	ITEM	QTY	UNIT	UNIT PRICE	BID TOTAL
14	FURNISH AND INSTALL 12" PVC SDR-35 DRAIN PIPE, COMPLETE	10	FT		
15	FURNISH AND INSTALL 18" RCP DRAIN PIPE, COMPLETE	82	FT		
16	CORE CUT EXISTING CONCRETE DRAIN BOX FOR NEW 12" PVC DRAIN CONNECTION, COMPLETE	1	EA		
17	FURNISH AND INSTALL 2'x4' DRAIN BOX WITH GRATE, OR 4' DIAMETER MANHOLE, INSIDE BUILDING, COMPLETE	1	EA		
18	FURNISH AND INSTALL 4'x4' DRAIN BOX WITH GRATE, OR 5' DIAMETER MANHOLE, AND 9 L.F. 12" RCP, AT NORTH ACCESS ROAD, COMPLETE	1	EA		
19	FURNISH AND INSTALL 4'x4' DRAIN BOX WITH GRATE, FOR 18" DRAIN EXTENSION, COMPLETE	1	EA		
20	FURNISH AND INSTALL 5' DIAMETER STORM DRAIN MANHOLE, FOR 18" DRAIN EXTENSION, COMPLETE	1	EA		
21	CONSTRUCT PARKING AREA SURFACE; FURNISH, PLACE, AND COMPACT GENERAL FILL (TYPE I) SURFACES (THICKNESS VARIES), COMPLETE; INCLUDING ALL REQUIRED EARTHWORK AND FINE GRADING PROVIDING POSITIVE DRAINAGE AWAY FROM BUILDINGS	6810	SQ FT		
22	CONSTRUCT NORTH ACCESS ROAD; PLACE, AND COMPACT NATIVE GENERAL FILL (TYPE I) SURFACES (THICKNESS VARIES), COMPLETE; INCLUDING ALL REQUIRED EARTHWORK	8000	SQ FT		
23	FURNISH AND INSTALL 2-INCH DIAMETER HDPE (DR 11) CULINARY WATER PIPE AT 9-FT DEEP (MIN.), COMPLETE	62	LF		
24	9-FT DEEP (MIN.), COMPLETE (PIPE SUPPLIED BY DISTRICT FITTINGS SUPPLIED BY CONTRACTOR)	200	LF		
25	FURNISH AND INSTALL 10-INCH DIAMETER WELDED HDPE (DR 11) CULINARY WATER PIPE AT 9-FT DEEP (MIN.), COMPLETE	640	LF		
26	FURNISH AND INSTALL 10-INCH DIAMETER WELDED HDPE (DR 11) CULINARY WATER PIPE AT 7-FT DEEP (MIN.), COMPLETE	1040	LF		
27	FURNISH AND INSTALL 6-INCH DIAMETER DUCTILE IRON (CL 150) CULINARY WATER PIPE AT 9-FT DEEP (MIN.), COMPLETE	20	LF		
28	FURNISH AND INSTALL 10-INCH HDPE (DR11) OR PVC (C900) 45 DEG. BEND, COMPLETE	5	EA		
29	FURNISH AND INSTALL 8-INCH DIAMETER GATE VALVE, COMPLETE	2	EA		
30	FURNISH AND INSTALL 10-INCH DIAMETER GATE VALVE, COMPLETE	2	EA		
31	FURNISH AND INSTALL AIR VACUUM RELIEF VALVE (ARV), COMPLETE (SEE DETAIL A/D.101)	1	EA		
32	INSTALL 8-INCH DIAMETER WELDED HDPE (DR 11) DRAIN PIPE AT (ARV), COMPLETE (PIPE SUPPLIED BY DISTRICT FITTINGS SUPPLIED BY CONTRACTOR)	82	LF		
33	FURNISH AND INSTALL HDPE (DR11) OR PVC (C900) 10"X10"X8" TEE, COMPLETE	1	EA		
34	EXISTING WATER SERVICE: CAP AND PLUG CONNECTION TO EXISTING 4" DIP AND RECONNECT TO NEW 10" WATER MAIN, COMPLETE.	1	EA		

00420 BID SCHEDULE

3/31/2022

TOP OF MOUNTAIN WATER SYSTEM AND PUMPHOUSE #5 PROJECT

NO.	ITEM	QTY	UNIT	UNIT PRICE	BID TOTAL
35	FURNISH AND INSTALL 10-INCH HDPE (DR11) OR PVC (C900) CONNECTION AT EXISTING 10" PVC (C900), COMPLETE	1	EA		
36	FURNISH AND INSTALL FIRE HYDRANT ASSEMBLY, COMPLETE (SEE DETAIL C/D.104)	2	EA		
37	FURNISH AND INSTALL 8"X2" HDPE (DR11) REDUCER, COMPLETE	1	EA		
38	FURNISH AND INSTALL 2-INCH HDPE (DR11) 45 DEG. BEND, COMPLETE	1	EA		
39	FURNISH AND INSTALL 2-INCH WATER SERVICE LINE CONNECTION TO EXISTING 1½" WATER SERVICE LINE, COMPLETE (SEE DETAIL B/D.104)	1	EA		
40	FURNISH AND INSTALL 1-INCH DIAMETER CULINARY WATER METER, COMPLETE	2	EA		
41	FURNISH AND INSTALL HDPE THRUST BLOCK, COMPLETE (SEE DETAIL B/D.102)	3	EA		
42	FURNISH AND INSTALL PRE-CAST CONCRETE PRV VAULT INCLUDING; PRE-CAST VAULT, ALL PIPING AND FITTINGS SHOWN ON DETAIL (EXCEPT FOR 6" DIP, KEY NOTE #21 WHICH IS TO BE PAID PER L.F. PER BID ITEM #25), COMPLETE (SEE SHEET C.504 / DETAIL B), (NOTE: ELECTRICAL EQUIPMENT FOR PRV VAULT INCLUDING; OUTLETS, LIGHTING, AND HEATER(S) SHALL BE FURNISHED AND INSTALLED BY OTHERS)	1	LUMP		
43	FURNISH AND PLACE 6" D50 RIPRAP DOWNSTREAM FROM ARV DRAIN, COMPLETE	36	SQ FT		
44	FURNISH AND PLACE NATIVE SEED MIX, OVER ALL DISTURBED UNIMPROVED AREAS WITH SLOPES UP TO 10%, COMPLETE	2600	SQ FT		
45	FURNISH AND PLACE EROSION CONTROL BLANKET, DEWITT #AEC-SEGRN4 (OR EQUAL), WITH NATIVE SEED MIX, OVER ALL DISTURBED UNIMPROVED AREAS WITH SLOPES OVER 10%	17740	SQ FT		
				TOTAL BID	

ADDITIVE BID ALTERNATES

46	FURNISH AND INSTALL 10-INCH DIAMETER PVC (C900) CULINARY WATER PIPE AT 9-FT DEEP (MIN.), COMPLETE	640	LF		
47	FURNISH AND INSTALL 10-INCH DIAMETER PVC (C900) CULINARY WATER PIPE AT 7-FT DEEP (MIN.), COMPLETE	1040	LF		
48	FURNISH AND PLACE IMPORTED GENERAL FILL (TYPE I) (IF REQ'D)	100	CY		
49	FURNISH AND PLACE IMPORTED STRUCTURAL FILL (TYPE II) (IF REQ'D)	100	CY		
50	FURNISH AND PLACE IMPORTED BORROW MATERIAL FOR PIPE BEDDING (IF REQ'D)	100	CY		
51	FURNISH AND PLACE IMPORTED BORROW MATERIAL FOR TRENCH BACKFILL (IF REQ'D)	100	CY		
52	COMPLETE ROCK EXCAVATION, COMPLETE (IF REQ'D)	100	CY		

SECTION 00500

AGREEMENT

THIS AGREEMENT, made this 1 day of _____, 2022, by and between the POWDER MOUNTAIN WATER AND SEWER IMPROVEMENT DISTRICT__, hereinafter called "OWNER" and _____ doing business as _____, hereinafter called "CONTRACTOR".

WITNESSETH: That for and in consideration of the payments and agreements hereinafter mentioned:

1. The CONTRACTOR will commence and complete construction of the "PUMPHOUSE #5 AND TOP OF MOUNTAIN WATER SYSTEM--- PROJECT # PMW.019.21".

2. The CONTRACTOR will furnish all of materials, supplies, tools, equipment, labor and other services necessary for the construction and completion of the PROJECTS described herein.

3. The CONTRACTOR will commence the WORK required by the CONTRACT DOCUMENTS within SEVEN (7) calendar days after the date of the NOTICE TO PROCEED; and will complete the same within NINETY (90) calendar days after the date of the NOTICE TO PROCEED; unless the period for completion is extended otherwise by the CONTRACT DOCUMENTS.

4. The CONTRACTOR agrees to perform all of the WORK described in the CONTRACT DOCUMENTS and comply with the terms therein for the sum as shown in the BID schedule.

5. The term "CONTRACT DOCUMENTS" means and includes the following:

(A) SECTION 00410 - BID
(B) SECTION 00420 - BID SCHEDULE
(C) SECTION 00450 - BID BOND
(C) SECTION 00500 – AGREEMENT
(D) SECTION 00510 – PAYMENT BOND
(E) SECTION 00520 – PERFORMANCE BOND
(K) SECTION 00530 - NOTICE OF AWARD
(L) SECTION 00540 - NOTICE TO PROCEED
(M) SECTION 00560 - CHANGE ORDER
(N) SECTION 00570 - NOTICE OF SUBSTANTIAL COMPLETION
(O) SECTION 00580 - NOTICE OF COMPLETION
(P) GENERAL CONDITIONS
(Q) SUPPLEMENTAL GENERAL CONDITIONS
(D) SPECIFICATIONS prepared and issued by GILSON ENGINEERING, Consulting Engineers, dated FEBRUARY, 2022.

(E) DRAWINGS prepared by Gilson Engineering, Consulting Engineers
(See enumeration in Supplemental General Conditions)

(F) ADDENDA:

No. 1 dated MARCH 28, 2022.
No. 2 dated MARCH 31, 2022.

6. The OWNER will pay to the CONTRACTOR, in the manner and at such times as set forth in the General Conditions, such amounts as required by the CONTRACT DOCUMENTS.

7. This Agreement shall be binding upon all parties hereto and their respective heirs, executors, administrators, successors, and assigns.

IN WITNESS WHEREOF, the parties hereto have executed, or caused to be executed by their duly authorized officials, this Agreement in five (5) copies, each of which shall be deemed an original on the date first above written.

OWNER:

_____

BY _____

NAME _____
(Please Type)

TITLE _____

(SEAL)

ATTEST:

_____

NAME _____
(Please Type)

TITLE _____

CONTRACTOR:

_____

BY _____

NAME _____
(Please Type)

ADDRESS _____

_____

(SEAL)

ATTEST:

_____

NAME _____
(Please Type)

TITLE_____

SECTION 00510 Bond Number:_____

PAYMENT BOND

CONTRACTOR (Name and Address):
_____
_____
_____

SURETY (Name and Principal Place of Business):
_____
_____
_____

OWNER (Name of Address):
_____
_____
_____

CONSTRUCTION CONTRACT
Date: _____
Amount: _____
Description (Name and Location): _____

BOND:
Date (Not earlier than Construction Contract Date): _____
Amount: _____

Modification to this Bond: ___ None ___ See Page 2

CONTRACTOR AS PRINCIPAL

Company: (Corporate Seal)
_____

Signature: _____

Name and Title: _____

SURETY

Company: (Corporate Seal)
_____

Signature: _____

Name and Title: _____

(Any additional signatures appear on Page 2)

(FOR INFORMATION ONLY -- Name, Address and Telephone)
AGENT or BROKER: _____
_____

OWNER'S REPRESENTATIVE (Architect, Engineer or other party): _____
_____

1. The Contractor and the Surety, jointly and severally, bind themselves, their heirs, executors, administrators, successors and assigns to the Owner to pay for labor, materials and equipment furnished for use in the performance of the Construction Contract, which is incorporated herein by reference.
2. With respect to the Owner, this obligation shall be null and void if the Contractor:
   - 2.1 Promptly makes payment, directly or indirectly, for all sums due Claimants, and
   - 2.2 Defends, indemnifies and holds harmless the Owner from claims, demands, liens or suits by any person or entity whose claim, demand, lien or suit is for the payment of labor, materials or equipment furnished for use in the performance of the Construction Contract, provided the Owner has promptly notified the Contractor and the Surety (at the address described in Paragraph 12) of any claims, demands, liens or suits and tendered defense of such claims, demands, liens or suits to the Contractor and the Surety, and provided there is no Owner Default.
3. With respect to Claimants, this obligation shall be null and void if the Contractor promptly makes payment, directly or indirectly, for all sums due.
4. The Surety shall have no obligation to Claimants under this Bond until:
   - 4.1 Claimants who are employed by or have a direct contract with the Contractor have given notice to the Surety (at the address described in Paragraph 12) and sent a copy, or notice thereof, to the Owner, stating that a claim is being made under this Bond and, with substantial accuracy, the amount of the claim.
   - 4.2 Claimants who do not have a direct contract with the Contractor:
     - 4.2.1 Have furnished written notice to the Contractor and sent a copy, or notice thereof, to the Owner, within 90 days after having last performed labor or last furnished materials or equipment included in the claim stating, with substantial accuracy, the amount of the claim and the name of the party to whom the material were furnished or supplied or for whom the labor was done or performed; and
     - 4.2.2 Have either received a rejection in whole or in part from the Contractor, or not received within 30 days of furnishing the above notice any communication from the Contractor by which the Contractor has indicated the claim will be paid directly or indirectly; and
     - 4.2.3 Not having been paid within the above 30 days, have sent a written notice to the Surety (at the address described in Paragraph 12) and sent a copy, or notice thereof, to the Owner, stating that a claim is being made under this Bond and enclosing a copy of the previous written notice furnished to the Contractor.
5. If a notice required by Paragraph 4 is given by the Owner to the Contractor or to the Surety, that is sufficient compliance.

6. When the Claimant has satisfied the conditions of Paragraph 4, the Surety shall promptly and at the Surety's expense take the following actions:
   6.1 Send an answer to the Claimant, with a copy to the Owner, within 45 days after receipt of the claim, stating the amounts that are undisputed and the basis for challenging any amounts that are disputed.
   6.2 Pay or arrange for payment of any undisputed amounts.
7. The Surety's total obligation shall not exceed the amount of this Bond, and the amount of this Bond shall be credited for any payments made in good faith by the Surety.
8. Amounts owed by the Owner to the Contractor under the Construction Contract shall be used for the performance of the Construction Contract and to satisfy claims, if any, under any Construction Performance Bond. By the Contractor furnishing and the Owner accepting this Bond, they agree that all funds earned by the Contractor in the performance of the Construction Contract are dedicated to satisfy obligations of the Contractor and the Surety under this Bond, subject to the Owner's priority to use the funds for the completion of the work.
9. The Surety shall not be liable to the Owner, Claimants or others for obligations of the Contractor that are unrelated to the Construction Contract. The Owner shall not be liable for payment of any costs or expenses of any Claimant under this Bond, and shall have under this Bond no obligation to make payments to, give notices on behalf of, or otherwise have obligations to Claimants under this Bond.
10. The Surety hereby waives notice of any change, including changes of time, to the Construction Contract or to related sub-contracts, purchase orders and other obligations.
11. No suit or action shall be commenced by a Claimant under this Bond other than in a court of competent jurisdiction in the location in which the work or part of the work is located or after the expiration of one year from the date (1) on which the Claimant gave the notice required by Subparagraph 4.1 or Clause 4.2.3, or (2) on which the last labor or service was performed by anyone or the last materials or equipment were furnished by anyone under the Construction Contract, whichever of (1) or (2) first occurs. If the provisions of this Paragraph are void or prohibited by law, the minimum period of limitation available to sureties as a defense in the jurisdiction of the suit shall be applicable.
12. Notice to the Surety, the Owner or the Contractor shall be mailed or delivered to the address shown on the signature page. Actual receipt of notice by Surety, the Owner or the Contractor, however accomplished, shall be sufficient compliance as of the date received at the address shown on the signature page.
13. When this Bond has been furnished to comply with a statutory or other legal requirement in the location where the construction was to be performed, any provision in this Bond conflicting with said statutory or legal requirement shall be deemed deleted herefrom and provisions conforming to such statutory or other legal requirement shall be deemed incorporated herein. The intent is that this Bond shall be construed as a statutory bond and not as a common law bond.
14. Upon request by any person or entity appearing to be a potential beneficiary of this Bond, the Contractor shall promptly furnish a copy of this Bond or shall permit a copy to be made.
15. DEFINITIONS:
   15.1 Claimant: An individual or entity having a direct contract with the Contractor or with a subcontractor of the Contractor to furnish labor, materials or equipment for use in the performance of the Contract. The intent of this Bond shall be to include without limitation in the terms "labor, materials or equipment" that part of water, gas, power, light, heat, oil, gasoline, telephone service or rental equipment used in the Construction Contract, architectural and engineering services required for performance of the work of the Contractor and the Contractor's subcontractors, and all other items for which a mechanic's lien may be asserted in the jurisdiction where the labor, materials or equipment were furnished.
   15.2 Construction Contract: The agreement between the Owner and the Contractor identified on the signature page, including all Contract Documents and changes thereto.
   15.3 Owner Default: Failure of the Owner, which has neither been remedied nor waived, to pay the Contractor as required by the Construction Contract or to perform and complete or comply with the other terms thereof.

MODIFICATIONS TO THIS BOND ARE AS FOLLOWS:

_____
_____
_____
_____
_____
_____

(Space is provided below for additional signatures of added parties, other than those appearing on the cover page.)

CONTRACTOR AS PRINCIPAL (Corporate Seal)	SURETY (Corporate Seal)
Company: _____	Company: _____
_____	_____
_____	_____
Signature: _____	Signature: _____
Name and Title: _____	Name and Title: _____
Address: _____	Address: _____
_____	_____
_____	_____

IMPORTANT – Surety companies executing bonds much appear on the Treasury Department's most current list (Circular 570, as amended) and be authorized to transact business in the State of UTAH.

SECTION 00520 Bond Number:_____

PERFORMANCE BOND

CONTRACTOR (Name and Address):
_____
_____
_____

SURETY (Name and Principal Place of Business):
_____
_____
_____

OWNER (Name of Address):
_____
_____
_____

CONSTRUCTION CONTRACT
Date: _____
Amount: _____
Description (Name and Location): _____

BOND:
Date (Not earlier than Construction Contract Date): _____
Amount: _____

Modification to this Bond: ___ None ___ See Page 2

CONTRACTOR AS PRINCIPAL

Company: (Corporate Seal)
_____

Signature: _____

Name and Title: _____

SURETY

Company: (Corporate Seal)
_____

Signature: _____

Name and Title: _____

(Any additional signatures appear on Page 2)

(FOR INFORMATION ONLY -- Name, Address and Telephone)
AGENT or BROKER: _____
_____

OWNER'S REPRESENTATIVE (Architect, Engineer or other party): _____
_____

1. The Contractor and the Surety, jointly and severally, bind themselves, their heirs, executors, administrators, successors and assigns to the Owner for the performance of the Construction Contract, which is incorporated herein by reference.
2. If the Contractor performs the Construction Contract, the Surety and the Contractor shall have no obligation under this Bond, except to participate in conferences as provided in Subparagraph 3.1:
3. If there is no Owner Default, the Surety's obligation under this Bond shall arise after:
   3.1 The Owner has notified the Contractor and the Surety at its address described in Paragraph 10 below that the Owner is considering declaring a Contractor Default and has requested and attempted to arrange a conference with the Contractor and the Surety to be held not later than fifteen days after receipt of such notice to discuss methods of performing the Construction Contract. If the Owner, the Contractor and the Surety agree, the Contractor shall be allowed a reasonable time to perform the Construction Contract, but such an arrangement shall not waive the Owner's right, if any, subsequently to declare a Contractor Default; and
   3.2 The Owner has declared a Contractor Default and formally terminated the Contractor's right to complete the contract. Such Contractor Default shall not be declared earlier than twenty days after the Contractor and Surety have received notice as provided in Subparagraph 3.1; and
   3.3 The Owner has agreed to pay the Balance of the Contract Price to the Surety in accordance with the terms of the Construction Contract or to a contractor selected to perform the Construction Contract in accordance with the terms of the contract with the Owner.
4. When the Owner has satisfied the conditions of Paragraph 3, the Surety shall promptly and at the Surety's expense take one of the following actions:
   4.1 Arrange for the Contractor with consent of the Owner, to perform and complete the Construction Contract; or
   4.2 Undertake to perform and complete the Construction Contract itself, through its agents or through independent contractors; or
   4.3 Obtain bids or negotiate proposals from qualified contractors acceptable to the Owner for a contract for performance and completion of the Construction Contract, arrange for a contract to be prepared for execution by the Owner and the contractor selected with the Owner's concurrence, to be secured with performance and payment bonds executed by a qualified surety equivalent to the bonds issued on the Construction Contract, and pay to the Owner the amount of damages as described in Paragraph 6 in excess of the Balance of the Contract Price incurred by the Owner resulting from the Contractor's default; or

4.4 Waive its right to perform and complete, arrange for completion, or obtain a new contractor, and with reasonable promptness under the circumstances:

4.4.1 After investigation, determine the amount for which it may be liable to the Owner and, as soon as practicable after the amount is determined, tender payment therefor to the Owner; or

4.4.2 Deny liability in whole or in part and notify the Owner citing reasons therefor.

5. If the Surety does not proceed as provided in Paragraph 4 with reasonable promptness, the Surety shall be deemed to be in default on this Bond fifteen days after receipt of an additional written notice from the Owner to the Surety demanding that the Surety performs its obligations under this Bond, and the Owner shall be entitled to enforce any remedy available to the Owner. If the Surety proceeds as provided in Subparagraph 4.4, and the Owner refuses the payment tendered or the Surety has denied liability, in whole or in part, without further notice, the Owner shall be entitled to enforce any remedy available to the Owner.

6. After the Owner has terminated the Contractor's right to complete the Construction Contract, and if the Surety elects to act under Subparagraph 4.1, 4.2 or 4.3 above, then the responsibility of the Surety to the Owner shall not be greater than those of the Contractor under the Construction Contract, and the responsibilities of the Owner to the Surety shall not be greater than those of the Owner under the Construction Contract. To the limit of the amount of this Bond, but subject to commitment by the Owner of the Balance of the Contract Price to mitigation of costs and damages on the Construction Contract, the Surety is obligated without duplication for:

6.1 The responsibilities of the Contractor for correction of defective work and completion of the Construction Contract;

6.2 Additional legal design professional and delay costs resulting from the Contractor's Default, and resulting from the actions or failure to act of the Surety under Paragraph 4; and

6.3 Liquidated damages, or if no liquidated damages are specified in the Construction Contract, actual damages caused by delayed performance or non-performance of the Contractor.

7. The Surety shall not be liable to the Owner or others for obligations of the Contractor that are unrelated to the Construction Contract and the Balance of the Contract Price shall not be reduced or set off on account of any such unrelated obligations. No right of action shall accrue on this Bond to any person or entity other than the Owner or its heirs, executors, administrators or successors.

8. The Surety hereby waives notice of any change, including changes of time, to the Construction Contract or to related sub-contracts, purchase orders and other obligations.

9. Any proceeding, legal or equitable, under this Bond may be instituted in any court of competent jurisdiction in the location in which the work or part of the work is located and shall be instituted within two years after Contractor Default or within two years after the Contractor ceased working or within two years after the Surety refuses or fails to perform its obligations under this Bond, whichever occurs first. If the provisions of this Paragraph are void or prohibited by law, the minimum period of limitation available to sureties as a defense in the jurisdiction of the suit shall be applicable.

10. Notice to the Surety, the Owner or the Contractor shall be mailed or delivered to the address shown on the signature page.

11. When this Bond has been furnished to comply with a statutory or other legal requirement in the location where the construction was to be performed, any provision in this Bond conflicting with said statutory or legal requirement shall be deemed deleted herefrom and provisions conforming to such statutory or other legal requirement shall be deemed incorporated herein. The intent is that this Bond shall be construed as a statutory bond and not as a common law bond.

12. DEFINITIONS:

12.1 Balance of the Contact Price: The total amount payable by the Owner to the Contractor under the Construction Contract after all proper adjustments have been made, including allowance to the Contractor of any amounts received or to be received by the Owner in settlement of insurance or other claims for damages to which the Contractor is entitled, reduced by all valid and proper payments made to or on behalf of the Contractor under the Construction Contract.

12.2 Construction Contract: The agreement between the Owner and the Contractor identified on the signature page, including all Contract Documents and changes thereto.

12.3 Contractor Default: Failure of the Contractor, which has neither been remedied nor waived, to perform or otherwise to comply with the terms of the Construction Contract.

12.4 Owner Default: Failure of the Owner, which has neither been remedied nor waived, to pay the Contractor as required by the Construction Contract or to perform and complete or comply with the other terms thereof.

MODIFICATIONS TO THIS BOND ARE AS FOLLOWS:

_____
_____
_____
_____
_____
_____

(Space is provided below for additional signatures of added parties, other than those appearing on the cover page.)

CONTRACTOR AS PRINCIPAL (Corporate Seal)	SURETY (Corporate Seal)
Company: _____	Company: _____
_____	_____
_____	_____
Signature: _____	Signature: _____
Name and Title: _____	Name and Title: _____
Address: _____	Address: _____
_____	_____

SECTION 00530

NOTICE OF AWARD

TO:

PROJECT DESCRIPTION:

The OWNER has considered the BID submitted by you for the above-described WORK in response to its INVITATION TO BID, dated _____, and INSTRUCTIONS TO BIDDERS.

You are hereby notified that your BID has been accepted for the WORK in the amount of $_____.

You are required by the INSTRUCTIONS TO BIDDERS to execute the AGREEMENT and furnish the required CONTRACTORS PERFORMANCE BOND, PAYMENT BOND and certificates of insurance within ten (10) calendar days from the date of this Notice to you.

If you fail to execute said AGREEMENT and to furnish said BONDS within ten (10) days from the date of this Notice, said OWNER will be entitled to consider all your rights arising out of the OWNERS acceptance of your BID as abandoned and as a forfeiture of your BID BOND. The OWNER will be entitled to such other rights as may be granted by law.

You are required to return an acknowledged copy of this NOTICE OF AWARD to the OWNER.

Dated this ___ day of _____, 20__,

_____

BY: _____

TITLE:_____

ACCEPTANCE OF NOTICE

Receipt of the above NOTICE OF AWARD is hereby acknowledged by _____.
on this _____ day of _____, 20__.

_____

BY: _____

TITLE: _____

SECTION 00540

NOTICE TO PROCEED

TO:

PROJECT DESCRIPTION:

You are hereby notified to commence WORK on this PROJECT in accordance with the AGREEMENT, dated _____, 20____, on or before _____, 20____; and you are to fully complete the WORK within _____90_____ calendar days thereafter. The date of completion of all WORK is therefore _____, 20____.

Receipt of the above NOTICE TO PROCEED is hereby acknowledged on this _____ day of _____, 20___.

_____

BY: _____

TITLE: _____

- -

ACCEPTANCE OF NOTICE

Receipt of the above NOTICE TO PROCEED is hereby acknowledged on this _____ day of _____, 20___.

BY: _____

TITLE: _____

SECTION 00560

DATE

CHANGE ORDER NO.

PROJECT:

CONTRACTOR:

You are hereby requested to comply with the following changes from the contract plans and specifications.

Item No. (1)	DESCRIPTION OF CHANGES: quantities, units, prices, schedule, etc. (2)	Decrease (3)	Increase (4)
	Total of Decreases:		
	Total of Increases:		
	Net contract change		

The sum of $ is added to the total contract price. The total adjusted contract price to date is $

This document shall become an amendment to the contract and all provisions of the contract will apply hereby.

Accepted by Contractor:

Date:

Contractor

Recommended by Inspector:

Date:

Inspector

Recommended by Engineer:

Date:

GILSON ENGINEERING, INC.

Approved by Owner:

Date:

City/Client

SECTION 00570
CERTIFICATE OF SUBSTANTIAL COMPLETION

PROJECT:

DATE OF ISSUANCE:

OWNER:

ENGINEER: Gilson Engineering, Inc.
12401 South 450 East C2
Draper, Utah 84020

Contract Nº:

CONTRACTOR:

CONTRACT FOR:

CONTRACT DATE:

This Certificate of Substantial Completion applies to all Work under the Contract Documents or the following parts thereof:

PER SPECIFICATIONS

To:_____
Owner

And To_____
Contractor

The Work to which this Certificate applies has been inspected by authorized representatives of OWNER, CONTRACTOR AND ENGINEER, and that Work is hereby declared to be substantially complete in accordance with the Contract Documents on:

_____
DATE OF SUBSTANTIAL COMPLETION

A tentative list of items to be completed or corrected is attached hereto. This list may not be all-inclusive, and the failure to include an item in it does not alter the responsibility of CONTRACTOR to complete all the Work in accordance with the Contract documents. The items in the tentative list shall be completed or corrected by the CONTRACTOR within ***30*** days of the above date of Substantial Completion.

The responsibilities between OWNER and CONTRACTOR for security, operation, safety, maintenance, heat, utilities, insurance and warranties shall be as follows:

RESPONSIBILITIES

OWNER: SECURITY, OPERATION, MAINTENANCE, HEAT, UTILITIES, AND INSURANCE

CONTRACTOR: INSURANCE, WARRANTY, AND SAFETY .

The following work must be completed:

This certificate does not constitute an acceptance of Work not in accordance with the contract documents nor is it a release of Contractor's obligation to complete the work in accordance with the contract documents.

Executed by the ENGINEER on _____

Gilson Engineering, Inc.
ENGINEER

By _____

CONTRACTOR accepts this certificate of Substantial Completion on _____, 20 .

_____
CONTRACTOR

By _____

OWNER accepts this certificate of Substantial Completion on _____, 20 .

_____
OWNER

By _____

SECTION 00580
NOTICE OF COMPLETION
DATE:

PROJECT:

TO:

CONTRACTOR:

You are hearby notified, in accordance with the Contract Documents including all changes and amendments, and no outstanding claims exist, that the WORK on this project is complete.

_____
OWNER

By _____

Date _____

Receipt of the above NOTICE OF COMPLETION if hereby acknowledged on

this _____ day of _____,21____.

_____
CONTRACTOR

By _____

Date _____

CONTRACT DOCUMENTS
FOR
PUMPHOUSE #5 AND TOP OF MOUNTAIN WATER SYSTEM
LOCATED AT POWDER MOUNTAIN SKI RESORT
FOR
POWDER MOUNTAIN WATER AND SEWER IMPROVEMENT DISTRICT
POWDER MOUNTAIN, UTAH

PROJECT NO. PWM.019.21

MARCH 2022

(REV. B-ADDENDUM #2)

GILSON ENGINEERING, INC. CONSULTING ENGINEERS AND SURVEYORS

Prepared _____ James J. Milligan, P.E.

Checked _____

Approved _____ Bradley S. Gilson, P.E.

12401 South 450 East
Building C, Unit 2
Draper, Utah 84020
Phone: 801-571-9414

SECTION 00700

GENERAL CONDITIONS

TABLE OF CONTENTS

Article Number	Title	Page
1.	DEFINITIONS AND TERMINOLOGY	
	A. Definitions	4
	B. Terminology	6
2.	PRELIMINARY MATTERS	
	A. Delivery of Bonds and Evidence of Insurance	7
	B. Copies of Documents	7
	C. Commencements of Contract Time; Notice to Proceed	7
	D. Starting the Project	7
	E. Time for Completion and Liquidated Damages	8
	F. Before Starting Construction	8
	G. Preconstruction Conference	8
	H. Finalizing Schedules	8
	I. Progress Meetings	9
3.	CONTRACT DOCUMENTS: INTENT, AMENDING, REUSE	
	A. Intent	9
	B. Reference Standards	9
	C. Reporting and Resolving Discrepancies	9
	D. Amending and Supplementing Contract Documents	10
	E. Reuse of Documents	10
	F. Electronic Data	10
4.	AVAILABILITY OF LANDS; SUBSURFACE AND PHYSICAL CONDITIONS; HAZARDOUS ENVIRONMENTAL CONDITONS; REFERENCE POINTS	
	A. Availability of Lands	11
	B. Subsurface and Physical Conditions	11
	C. Differing Subsurface or Physical Conditions	11
	D. Underground Facilities	12
	E. Reference Points	13
	F. Hazardous Environmental Condition at Site	13
5.	BONDS AND INSURANCE	
	A. Performance, Payment and Other Bonds	14
	B. Licensed Sureties and Insurers	15
	C. Certificates of Insurance	15
	D. Contractor's Liability Insurance	15
	E. Owner's Liability Insurance	16
	F. Property Insurance	16
	G. Waiver of Rights	17
	H. Receipt and Application of Insurance Proceeds	17
	I. Acceptance of Bonds and Insurance; Option to Replace	17
	J. Partial Utilization, Acknowledgment of Property Insurer	18
6.	CONTRACTOR'S RESPONSIBILITIES	
	A. Supervision and Superintendence	18
	B. Labor; Working Hours	18
	C. Services, Materials, and Equipment	18
	D. Progress Schedule	18
	E. Substitutes and "Or-Equals"	19
	F. Concerning Subcontractors, Suppliers, and Others	20
	G. Patent Fees and Royalties	21
	H. Permits	21
	I. Laws and Regulations	21
	J. Taxes	21
	K. Use of Site and Other Areas	21
	L. Record Documents	22
	M. Safety and Protection	22

Article Number	Title	Page
	N. Safety Representative	22
	O. Hazard Communication Programs	23
	P. Emergencies	23
	Q. Shop Drawings and Samples	23
	R. Continuing the Work	24
	S. Contractor's General Warranty and Guarantee	24
	T. Indemnification	25
	U. Delegation of Professional Design Services	25
7.	OTHER WORK AT THE SITE	
	A. Related Work at Site	26
	B. Coordination	26
	C. Legal Relationships	26
8.	OWNER'S RESPONSIBILITIES	
	A. Communication to Contractor	26
	B. Replacement of Engineer	27
	C. Furnish Data	27
	D. Pay When Due	27
	E. Lands and Easements; Reports and Tests	27
	F. Insurance	27
	G. Change Orders	27
	H. Inspections, Tests and Approvals	27
	I. Limitations on Owner's Responsibilities	27
	J. Undisclosed Hazardous Environmental Condition	27
	K. Evidence of Financial Arrangements	27
9.	ENGINEER'S STATUS DURING CONSTRUCTION	
	A. Owner's Representative	28
	B. Visits to Site	28
	C. Project Representative	28
	D. Authorized Variations in Work	28
	E. Rejecting Defective Work	28
	F. Shop Drawings, Change Orders and Payments	28
	G. Determination of Unit Price Work	29
	H. Decisions on Requirements of Contract Documents and Acceptability of Work	29
	I. Limitations on Engineer's Authority and Responsibilities	29
10.	CHANGES IN THE WORK; CLAIMS	
	A. Authorized Changes in the Work	30
	B. Unauthorized Changes in the Work	30
	C. Execution of Change Orders	30
	D. Notification to Surety	30
	E. Claims	30
11.	COST OF THE WORK; ALLOWANCES; UNIT PRICE WORK	
	A. Cost of the Work	31
	B. Allowances	32
	C. Unit Price Work	33
12.	CHANGE OF CONTRACT PRICE; CHANGE OF CONTRACT TIME	
	A. Change of Contract Price	33
	B. Change of Contract Times	34
	C. Delays	34
13.	TESTS AND INSPECTIONS; CORRECTION, REMOVAL OR ACCEPTANCE OF DEFECTIVE WORK	
	A. Notice of Defects	34
	B. Access to Work	34
	C. Tests and Inspections	35
	D. Uncovering Work	35
	E. Owner May Stop the Work	35
	F. Correction or Removal of Defective Work	36
	G. Correction Period	36

Article Number	Title	Page
	H. Acceptance of Defective Work	36
	I. Owner May Correct Defective Work	37
14.	PAYMENTS TO CONTRACTOR AND COMPLETION	
	A. Schedule of Values	37
	B. Progress Payments	37
	C. Contractor's Warranty of Title	39
	D. Substantial Completion	39
	E. Partial Utilization	39
	F. Final Inspection	40
	G. Final Payment	40
	H. Final Completion Delayed	40
	I. Waiver of Claims	41
15.	SUSPENSION OF WORK AND TERMINATION	
	A. Owner May Suspend Work	41
	B. Owner May Terminate For Cause	41
	C. Owner May Terminate For Convenience	42
	D. Contractor May Stop Work or Terminate	42
16.	DISPUTE RESOLUTION	
	A. Methods and Procedures	42
17.	MISCELLANEOUS	
	A. Giving Notice	43
	B. Computation of Times	43
	C. Cumulative Remedies	43
	D. Survival of Obligations	43
	E. Controlling Law	43
	F. Headings	43

SECTION 00700

GENERAL CONDITIONS

ARTICLE 1 — DEFINITIONS AND TERMINOLOGY

A. DEFINITIONS. Wherever used in these GENERAL CONDITIONS or in the other CONTRACT DOCUMENTS, the terms listed below will have the meanings indicated, which are applicable to both the singular and plural thereof:

1.1. ADDENDA -- Written or graphic instruments issued prior to the opening of BIDS which clarify, correct or change the BIDDING requirements or the CONTRACT DOCUMENTS, including SPECIFICATIONS and DRAWINGS.

1.2. AGREEMENT -- The written agreement between the OWNER and CONTRACTOR covering the WORK to be performed; other CONTRACT DOCUMENTS are attached to the AGREEMENT and made a part thereof as provided therein.

1.3. APPLICATION FOR PAYMENT -- Form accepted by the ENGINEER which is to be used by the CONTRACTOR in requesting progress or final payments; and which is to be accompanied by such supporting documentation as is required by the CONTRACT DOCUMENTS.

1.4. ASBESTOS -- Any material that contains more than one percent asbestos and is friable or is releasing asbestos fibers into the air above current action levels established by the United States Occupational Safety and Health Administration.

1.5. BID -- Offer or proposal of BIDDER submitted on the prescribed form setting forth prices for the WORK to be performed.

1.6. BIDDER -- Any person, firm or corporation submitting a BID for the WORK.

1.7. BIDDING DOCUMENTS -- The Invitation to Bid, Instructions to Bidders, Additional Invitation to Bidders, the BID form, and the proposed CONTRACT DOCUMENTS (including all ADDENDA issued prior to receipt of BIDS).

1.8. BIDDING REQUIREMENTS -- Invitation to Bid, Instructions to Bidders, Additional Instructions to Bidders and the BID form.

1.9. BONDS -- Bid, Performance and Payment Bonds and other instruments of security; furnished by the CONTRACTOR and his surety in accordance with the CONTRACT DOCUMENTS.

1.10. CHANGE ORDER -- A document recommended by the ENGINEER, which is signed by the CONTRACTOR and OWNER and authorizes an addition, deletion or revision in the WORK, or an adjustment in the CONTRACT PRICE or CONTRACT TIME, issued on or after the Effective Date of the AGREEMENT.

1.11. CONTRACT DOCUMENTS -- The AGREEMENT, ADDENDA (which pertain to the CONTRACT DOCUMENTS), CONTRACTOR's BID (including documentation accompanying the BID and any post-Bid documentation submitted prior to the NOTICE OF AWARD) when attached as an exhibit to the AGREEMENT, the BONDS, the NOTICE TO PROCEED, these GENERAL CONDITIONS, the SUPPLEMENTAL GENERAL CONDITIONS, the SPECIFICATIONS and the DRAWINGS, the same are more specifically identified in the AGREEMENT, together with all Written Amendments, Change Orders, Work Change Directives, Field Orders and ENGINEER's written interpretations and clarifications issued pursuant to paragraphs 3.5, 3.6.1, and 3.6.3 on or after the Effective Date of the AGREEMENT.

1.11.1. Shop Drawing submittals approved pursuant to paragraphs 6.26 and 6.27 and the reports and drawings referred to in paragraph 4.2.1 are not CONTRACT DOCUMENTS.

1.12. CONTRACT PRICE -- The moneys payable by the OWNER to the CONTRACTOR for completion of the WORK in accordance with the CONTRACT DOCUMENTS as stated in the AGREEMENT (subject to the provisions of paragraph 11.9.1 in the case of Unit Price Work).

1.13. CONTRACT TIMES -- The number of days (computed as provided in paragraph 17.2) or the dates stated in the AGREEMENT: (i) to achieve Substantial Completion, and (ii) to complete the WORK so that it is ready for final payment as evidenced by the ENGINEER's written recommendation of final payment in accordance with paragraph 14.13.

1.14. CONTRACTOR -- The person, firm or corporation with whom the OWNER has entered into the Agreement.

1.15. DEFECTIVE -- An adjective which when modifying the word WORK refers to the WORK that is unsatisfactory, faulty of deficient, in that it does not conform to the CONTRACT DOCUMENTS; or does not meet the requirements of any inspection, reference standard, test or approval referred to in the CONTRACT DOCUMENTS; or has been damaged prior to the ENGINEER's recommendation of final payment (unless responsibility for the protection thereof has been assumed by the OWNER at Substantial Completion in accordance with paragraph 14.8 or 14.10)

1.16. DRAWINGS -- Drawings which show scope, extent and character of the WORK to be furnished and performed by the CONTRACTOR; and which have been prepared or approved by the ENGINEER and referred to in the CONTRACT DOCUMENTS.

1.16.1. Shop drawings are not Drawings as so defined.

1.17. EFFECTIVE DATE OF THE AGREEMENT -- Date indicated in the AGREEMENT on which it becomes effective, but if no such date is indicated it means the date on which the AGREEMENT is signed and delivered by the last of the two parties to sign and deliver.

1.18. ENGINEER -- The person, firm or corporation named as such in the AGREEMENT.

1.19. ENGINEER'S CONSULTANT -- A person, firm or corporation having a contract with the ENGINEER to furnish services as the ENGINEER's independent professional associate or consultant with respect to the Project and who is identified as such in the Supplementary Conditions.

1.20. FIELD ORDER -- A written order issued by the ENGINEER which orders minor changes in the WORK in accordance with paragraph 9.5, but which does not involve a change in CONTRACT PRICE or CONTRACT TIME.

1.21. GENERAL REQUIREMENTS -- Section 00600 of the Specifications.

1.22. HAZARDOUS WASTE -- The term Hazardous Waste shall have the meaning provided in Section 1004 of the Solid Waste Disposal Act (42 USC Section 6903) as amended from time to time.

1.23. INSPECTOR -- The authorized representative of the OWNER or ENGINEER who is assigned to observe the work on the PROJECT.

1.24. LAWS AND REGULATIONS; LAWS OR REGULATIONS -- Any and all applicable laws, rules, regulations, ordinances, codes and orders of any and all governmental bodies, agencies, authorities and courts having jurisdiction.

1.25. LIENS -- Liens, charges, security interests or encumbrances upon real property or personal property.

1.26. MILESTONES -- A principal event specified in the Contract Documents relating to an intermediate completion date or time prior to Substantial Completion of all the Work.

1.27. NOTICE OF AWARD -- The written notice by the OWNER to the apparent successful BIDDER stating that upon compliance by the apparent successful BIDDER with the conditions precedent enumerated therein, within the time specified, the OWNER will sign and deliver the AGREEMENT.

1.28. NOTICE TO PROCEED -- A written notice given by the OWNER to the CONTRACTOR (with a copy to the ENGINEER) fixing the date on which the CONTRACT TIME will commence to run and on which the CONTRACTOR shall start to perform the CONTRACTOR's obligations under the CONTRACT DOCUMENTS.

1.29. NOTICE OF SUBSTANTIAL COMPLETION -- A written notice from the OWNER to the CONTRACTOR that the WORK on the PROJECT is substantially complete.

1.30. NOTICE OF COMPLETION -- A written notice from the OWNER to the CONTRACTOR that the WORK on the PROJECT is complete.

1.31. OWNER -- The public body or authority, corporation, association, firm or person with whom the CONTRACTOR has entered into the AGREEMENT and for whom the WORK is to be provided.

1.32. PARTIAL UTILIZATION -- Use by the OWNER of a substantially completed part of the WORK for the purpose for which it is intended (or a related purpose) prior to SUBSTANTIAL COMPLETION of all the WORK.

1.33. PCBs – Polychlorinated biphenyls.

1.34. PETROLEUM -- Petroleum, including crude oil or any fraction thereof which is liquid at standard conditions of temperature and pressure (60 degrees Fahrenheit and 14.7 pounds per square inch absolute), such as oil, petroleum, fuel oil, oil sludge, oil refuse, gasoline, kerosene, and oil mixed with other non-Hazardous Wastes and crude oils.

1.35. PROJECT -- The total construction of which the WORK to be provided under the CONTRACT DOCUMENTS may be the whole, or a part as indicated elsewhere in the CONTRACT DOCUMENTS.

1.36. RADIOACTIVE MATERIAL -- Source, special nuclear, or by-product material as defined by the Atomic Energy Act of 1954

(42 USC Section 2011 et seq.) as amended from time to time.

1.37. RESIDENT PROJECT REPRESENTATIVE -- The authorized representative of the OWNER or ENGINEER who may be assigned to the site or any part thereof.

1.38. SAMPLES -- Physical examples of materials, equipment, or workmanship that are representative of some portion of the WORK and which establish the standards by which such portion of the WORK will be judged.

1.39. SHOP DRAWINGS -- All drawings, diagrams, illustrations, schedules and other data or information which are specifically prepared or assembled by or for the CONTRACTOR and submitted by the CONTRACTOR to illustrate how specific portions of the WORK shall be fabricated or installed.

1.40. SPECIFICATIONS -- Those portions of the CONTRACT DOCUMENTS consisting of written technical descriptions of materials, equipment, construction systems, standards and workmanship as applied to the WORK and certain administrative details applicable thereto.

1.41. SUBCONTRACTOR -- An individual, firm or corporation having a direct contract with the CONTRACTOR or with any other SUBCONTRACTOR for the performance of a part of the WORK at the site.

1.42. SUBSTANTIAL COMPLETION -- The WORK (or a specified part thereof) has progressed to the point where, in the opinion of ENGINEER, as evidenced by the ENGINEER's definitive certificate of SUBSTANTIAL COMPLETION, it is sufficiently complete, in accordance with the CONTRACT DOCUMENTS, so that the WORK (or specified part) can be utilized for the purposes for which it is intended; or if no such certificate is issued, when the WORK is complete and ready for final payment as evidenced by the ENGINEER’s written recommendation of final payment in accordance with paragraph 14.13. The terms "substantially complete" and "substantially completed" as applied to all or part of the WORK refer to SUBSTANTIAL COMPLETION thereof.

1.43. SUPPLEMENTAL GENERAL CONDITIONS -- The part of the CONTRACT DOCUMENTS which amends or supplements these GENERAL CONDITIONS.

1.44. SUPPLIER -- A manufacturer, fabricator, supplier, distributor, material man or vendor having a direct contract with the CONTRACTOR or with any Subcontractor to furnish materials or equipment to be incorporated in the WORK by the CONTRACTOR or any Subcontractor.

1.45. UNDERGROUND FACILITIES -- All pipelines, conduits, ducts, cables, wires, manholes, vaults, tanks, tunnels or other such facilities or attachments, and any encasements containing such facilities which have been installed underground to furnish any of the following services or materials: electricity, gases, steam, liquid petroleum products, telephone or other communications, cable television, sewage and drainage removal, traffic or other control systems or water.

1.46. UNIT PRICE WORK -- WORK to be paid for on the basis of unit prices.

1.47. WORK - The entire completed construction or the various separately identifiable parts thereof required to be furnished under the CONTRACT DOCUMENTS. The WORK includes and is the result of performing or furnishing labor and furnishing and incorporating materials and equipment into the construction, and performing or furnishing services and furnishing documents, all as required by the CONTRACT DOCUMENTS.

1.48. WORK CHANGE DIRECTIVE -- A written directive to the CONTRACTOR, issued on or after the Effective Date of the AGREEMENT and signed by the OWNER and recommended by the ENGINEER, ordering an addition, deletion or revision in the WORK, or responding to differing or unforeseen physical conditions under which the WORK is to be performed as provided in paragraph 4.2 or 4.3 or to emergencies under paragraph 6.23. A WORK CHANGE DIRECTIVE may not change the CONTRACT PRICE or the CONTRACT TIME, but is evidence that the parties expect that the change directed or documented by a WORK CHANGE DIRECTIVE will be incorporated in a subsequently issued CHANGE ORDER following negotiations by the parties as to its effect, if any, on the CONTRACT PRICE or CONTRACT TIME, as provided in paragraph 10.2.

1.49. WRITTEN AMENDMENT -- A written amendment of the CONTRACT DOCUMENTS, signed by the OWNER and CONTRACTOR on or after the Effective Date of the AGREEMENT and normally dealing with the non-engineering or non-technical rather than strictly construction-related aspects of the CONTRACT DOCUMENTS.

1.50. WRITTEN NOTICE -- A written notice to any party of the AGREEMENT relative to any part of this AGREEMENT, in writing and considered delivered and the service thereof completed, when posted by certified or registered mail to the said party at his last given address, or delivered in person to said party or his authorized representative on the WORK.

B. TERMINOLOGY.

1.51. INTENT OF CERTAIN TERMS OR ADJECTIVES -- The Contract Documents include the terms “as allowed”, “as approved”, “as ordered”, “as directed”, or terms of like effect or import to authorize an exercise of professional judgment by the ENGINEER. In addition, the adjectives “reasonable”, “suitable”, “acceptable”, “proper”, “satisfactory”, or adjectives of like effect or import are used to describe an action or determination of the ENGINEER as to the Work. It is intended that such exercise of

profession judgment, action or determination will be solely to evaluate, in general, the Work for compliance with the requirements of and information in the Contract Documents and conformance with the design concept of the completed Project as a functioning whole as shown or indicated in the Contract Documents (unless there is a specific statement indicating otherwise). The use of any such term or adjective is not intended to and shall not be effective to assign to the ENGINEER any duty or authority to supervise or

direct the performance of the Work, or any duty or authority to undertake responsibility contrary to the provisions of Paragraph 9.13 or any other provisions of the Contract Documents.

1.52. DAY -- The word “day” means a calendar day of 24 hours measured from midnight to the next midnight.

1.53. DEFECTIVE -- The word “defective”, when modifying the word “Work”, refers to Work that is unsatisfactory, faulty, or deficient in that it:

1.53.1. does not conform to the Contract Documents; or

1.53.2. does not meet the requirements of any applicable inspection, reference standard, test, or approved referred to in the Contract Documents; or

1.53.3. has been damaged prior to the ENGINEER’s recommendation of final payment (unless responsibility for the protection thereof has been assumed by the OWNER at Substantial Completion in accordance with Paragraphs 14.9 and 14.10).

1.54. FURNISH, INSTALL, PERFORM, PROVIDE.

1.54.1. The word “furnish”, when used in connection with services, materials, or equipment, shall mean to supply and deliver said services, materials, or equipment to the Site (or some other specified location) ready for use or installation, and in usable or operable condition.

1.54.2. The word “install”, when used in connection with services, materials, or equipment, shall mean to put into use or place in final position said services, materials, or equipment complete and ready for intended use.

1.54.3. The words “perform” or “provide”, when used in connection with services, materials, or equipment, shall mean to furnish and install said services, materials, or equipment complete and ready for intended use.

1.54.4. When “furnish”, “install”, “perform”, or “provide” is not used in connection with services, materials, or equipment in a context clearly requiring an obligation of the CONTRACTOR, “provide” is implied.

1.55. Unless stated otherwise in the Contract Documents, words or phrases which have a well-known technical or construction industry or trade meaning are used in the Contract Documents in accordance with such recognized meaning.

ARTICLE 2 --- PRELIMINARY MATTERS.

A. DELIVERY OF BONDS AND EVIDENCE OF INSURANCE:

2.01.1. When the CONTRACTOR delivers executed counterparts of the AGREEMENT to the OWNER, the CONTRACTOR shall also deliver to the OWNER such BONDS as CONTRACTOR may be required to furnish in accordance with paragraph 5.1.

2.01.2. Before any Work at the Site is started, the CONTRACTOR and OWNER shall each deliver to the other, with copies to each additional insured indentified in the Supplemental General Conditions, certificates of insurance (and other evidence of insurance which either of them or any additional insured may reasonably request) which the CONTRACTOR and OWNER respectively are required to purchase and maintain in accordance with Article 5.

B. COPIES OF DOCUMENTS:

2.02. The OWNER shall furnish to the CONTRACTOR two copies of the CONTRACT DOCUMENTS (unless otherwise specified in the SUPPLEMENTAL GENERAL CONDITIONS) as are necessary for the execution of the WORK. Additional copies will be furnished, upon request, at the cost of reproduction.

C. COMMENCEMENT OF CONTRACT TIME; NOTICE TO PROCEED:

2.03. The CONTRACT TIME will commence to run on the day indicated in the NOTICE TO PROCEED. A NOTICE TO PROCEED may be given at any time within thirty days after the Effective Date of the AGREEMENT. In no event will the CONTRACT TIME commence to run later than the sixty days after the day of the BID opening or the thirtieth day after the Effective Date of the AGREEMENT, whichever date is earlier.

D. STARTING THE PROJECT:

2.04. The CONTRACTOR shall start to perform the WORK on the date when the CONTRACT TIME commences to run, but no WORK shall be done at the site prior to the date on which the CONTRACT TIME commences to run.

E. TIME FOR COMPLETION AND LIQUIDATED DAMAGES:

2.05.1. The date of beginning and the time for completion of the WORK are essential conditions of the CONTRACT DOCUMENTS and the WORK embraced shall be commenced on a date specified in the NOTICE TO PROCEED.

2.05.2. The CONTRACTOR will proceed with the WORK at such rate of progress to insure full completion within the CONTRACT TIME. It is expressly understood and agreed, by and between the CONTRACTOR and the OWNER, that the

CONTRACT TIME for the completion of the WORK described herein is a reasonable time, taking into consideration the average climatic and economic conditions and other factors prevailing in the locality of the WORK.

2.05.3. If the CONTRACTOR shall fail to complete the WORK within the CONTRACT TIME, or extension of time granted by the OWNER, then the contractor will pay to the OWNER the amount for liquidated damages as specified in the BID for each calendar day that the CONTRACTOR shall be in default after the time stipulated in the CONTRACT DOCUMENTS.

2.05.4. The CONTRACTOR shall not be charged with liquidated damages or any excess cost when the delay in completion of the WORK is due to the following and the CONTRACTOR has promptly given WRITTEN NOTICE of such delay to the OWNER or ENGINEER.

a. To any preference, priority or allocation order duly issued by the OWNER.

b. To unforeseeable causes beyond the control and without the fault or negligence of the CONTRACTOR, including but not restricted to, acts of God or of the public enemy, acts of the OWNER, acts of other CONTRACTOR in the performance of a contract with the OWNER, fires, floods, epidemics, quarantine restrictions, strikes, freight embargoes, and abnormal and unforeseeable weather; and

c. To any delays of SUBCONTRACTORS occasioned by any of the causes specified in paragraphs 2.8.1 and 2.8.2 of this article.

F. BEFORE STARTING CONSTRUCTION:

2.06.1. Before undertaking each part of the WORK, the CONTRACTOR shall carefully study and compare the CONTRACT DOCUMENTS and check and verify pertinent figures shown thereon and all applicable field measurements. The CONTRACTOR shall promptly report in writing to the ENGINEER any conflict, error, ambiguity or discrepancy which the CONTRACTOR may discover and shall obtain a written interpretation or clarification from the ENGINEER before proceeding with any WORK affected thereby; however, the CONTRACTOR shall not be liable to the OWNER or ENGINEER for failure to report any conflict, error, ambiguity or discrepancy in the CONTRACT DOCUMENTS, unless the CONTRACTOR knew or reasonably should have known thereof.

2.06.2. Within ten days after the Effective Date of the AGREEMENT (unless otherwise specified in the General Requirements), the CONTRACTOR shall submit to the ENGINEER for review:

a. a preliminary progress schedule indicating the times (numbers of days or dates) for starting and completing the various stages of the WORK, including any Milestones specified in the CONTRACT DOCUMENTS;

b. a preliminary schedule of SHOP DRAWING and Sample submittals which will list each required submittal and the times for submitting, reviewing and processing such submittal;

c. a preliminary schedule of values for all of the WORK which will include quantities and prices of items aggregating the CONTRACT PRICE and will subdivide the WORK into component parts in sufficient detail to serve as the basis for progress payments during construction. Such prices will include an appropriate amount of overhead and profit applicable to each item of the WORK.

G. PRECONSTRUCTION CONFERENCE:

2.07. Within twenty days after the Effective Date of the AGREEMENT, but before the CONTRACTOR starts the WORK at the site, a conference attended by the CONTRACTOR, ENGINEER, OWNER and others as appropriate will be held to establish a working understanding among the parties as to the WORK; and to discuss the schedules referred to in paragraph 2.6, procedures for handling SHOP DRAWINGS and other submittals, and for processing APPLICATIONS FOR PAYMENT, and maintaining

required records. The preconstruction conference shall be as described in Section 01300, ADMINISTRATIVE REQUIREMENTS.

H. FINALIZING SCHEDULES:

2.08. Unless otherwise provided in the CONTRACT DOCUMENTS, at least ten days before submission of the first APPLICATION FOR PAYMENT a conference attended by the CONTRACTOR, ENGINEER and others as appropriate will be held to review for acceptability to the ENGINEER as provided below the schedules submitted in accordance with paragraph 2.6 and Section 01300. The CONTRACTOR shall have an additional ten days to make corrections and adjustments and to complete and re-submit the schedules. No progress payment shall be made to the CONTRACTOR until the schedules are submitted to and acceptable to the ENGINEER, as provided below. The progress schedule will be acceptable to the ENGINEER as providing an orderly progression of the WORK to completion within any specified Milestones and the CONTRACT TIME, but such acceptance will neither impose on the ENGINEER responsibility for the sequencing, scheduling or progress of the WORK nor interfere with or relieve the CONTRACTOR from the CONTRACTOR's full responsibility therefore. The CONTRACTOR's schedule of SHOP DRAWING and Sample submissions will be acceptable to the ENGINEER as providing a workable arrangement for reviewing and processing the required submissions. The CONTRACTOR's schedule of values will be acceptable to the ENGINEER as to form and substance.

I. PROGRESS MEETINGS:

2.09. Progress meeting shall be scheduled by the CONTRACTOR as described in Section 01300.

ARTICLE 3 --- CONTRACT DOCUMENTS: INTENT, AMENDING, REUSE.

A. INTENT:

3.01.1. The CONTRACT DOCUMENTS comprise the entire agreement between the OWNER and the CONTRACTOR concerning the WORK. The CONTRACT DOCUMENTS are complementary; what is called for by one is as binding as if called for by all. The CONTRACT DOCUMENTS will be construed in accordance with the law of the place of the Project.

3.01.2. It is the intent of the CONTRACT DOCUMENTS (including technical specifications and project drawings) to describe a functionally complete PROJECT (or part thereof) to be constructed in accordance with the CONTRACT DOCUMENTS. Any WORK, materials or equipment that may reasonably be inferred from the CONTRACT DOCUMENTS or from prevailing custom or trade usage as being required to produce the intended result will be furnished and performed whether or not specifically called for, at no additional cost to the OWNER. When words or phrases which have a well-known technical or construction industry or trade meaning are used to describe the WORK, materials or equipment, such words or phrases shall be interpreted in accordance with that meaning.

3.01.3. Clarifications and interpretations of the CONTRACT DOCUMENTS shall be issued by the ENGINEER as provided in Article 9.

B. REFERENCE STANDARDS

3.02. Standards, Specifications, Codes, Laws, and Regulations.

3.02.1. Reference to standards, specifications, manuals or codes of any technical society, organization or association, or to the LAWS or REGULATIONS of any governmental authority, whether such reference be specific or by implication, shall mean the latest standard, specification, manual, code or LAWS or REGULATIONS in effect at the time of the opening of BIDS (or, on the Effective Date of the AGREEMENT if there were no BIDS); except as may be otherwise specifically stated in the CONTRACT DOCUMENTS.

3.02.2. No provision of any such standard, specification, manual, code or any instruction of a Supplier shall be effective to change the duties and responsibilities of the OWNER, CONTRACTOR or ENGINEER, or any of their subcontractors, consultants, agents or employees from those set forth in the CONTRACT DOCUMENTS. No such provision or instruction shall be effective to assign to the OWNER, ENGINEER, or any of their related consultants, agents or employees, any duty or authority to supervise or direct the performance of the WORK, or any duty or authority to undertake responsibility inconsistent with the provisions of the CONTRACT DOCUMENTS.

C. REPORTING AND RESOLVING DISCREPANCIES

3.03.1 Reporting Discrepancies.

a. Contractor's Review of Contract Documents Before Starting Work: Before undertaking each part of the Work, the CONTRACTOR shall carefully study and compare the CONTRACT DOCUMENTS and check and verify pertinent figures therein and all applicable field measurements. The CONTRACTOR shall promptly report in writing to the ENGINEER any conflict, error,

ambiguity, or discrepancy which the CONTRACTOR may discover and shall obtain a written interpretation or clarification from the ENGINEER before proceeding with any WORK affected thereby.

b. Contractor's Review of Contract Documents During Performance of Work: If, during the performance of the WORK, the CONTRACTOR discovers a conflict, error, ambiguity or discrepancy within the CONTRACT DOCUMENTS or between the CONTRACT DOCUMENTS and any provision of any such Law or Regulation applicable to the performance of the WORK or of any standard, specification, manual or code or of any instruction of any Supplier, the CONTRACTOR shall promptly report it to the ENGINEER in writing. The CONTRACTOR shall not proceed with the WORK affected thereby (except in an emergency as required by Article 6) until an amendment or supplement to the CONTRACT DOCUMENTS has been issued by one of the methods indicated in Article 3.

c. The CONTRACTOR shall not be liable to the OWNER or ENGINEER for failure to report any conflict, error, ambiguity or discrepancy in the CONTRACT DOCUMENTS unless the CONTRACTOR knew or reasonably should have known thereof.

3.03.2. Resolving Discrepancies.

a. Except as otherwise specifically stated in the CONTRACT DOCUMENTS or as may be provided by amendment or supplement thereto issued by one of the methods indicated in Article 3, the provisions of the CONTRACT DOCUMENTS shall take precedence in resolving any conflict, error, ambiguity or discrepancy between the provisions of the CONTRACT DOCUMENTS, and:

(1) the provisions of any such standard, specification, manual, code or instruction (whether or not specifically incorporated by reference in the CONTRACT DOCUMENTS); or

(2) the provisions of any Laws or Regulations applicable to the performance of the Work (unless such an interpretation of the provisions of the CONTRACT DOCUMENTS would result in violation of such Law or Regulation).

D. AMENDING AND SUPPLEMENTING CONTRACT DOCUMENTS:

3.04.1. The CONTRACT DOCUMENTS may be amended to provide for additions, deletions and revisions in the WORK or to modify the terms and conditions thereof by either a Change Order or a Written Change Directive.

3.04.2. The requirements of the CONTRACT DOCUMENTS may be supplemented, and minor variations and deviations in the WORK may be authorized, in one or more of the following ways:

a. a Field Order (subject to the provisions of to Article 9);

b. ENGINEER's acceptance of a SHOP DRAWING or sample (subject of the provisions of Article 6); or

c. ENGINEER's written interpretation or clarification (pursuant to paragraph 9.4); or

d. additional instructions and detail drawings, as necessary to carry out the WORK in accordance with the requirements of the CONTRACT DOCUMENTS. The additional drawings and instruction thus supplied will become a part of the CONTRACT DOCUMENTS. The CONTRACTOR shall carry out the WORK in accordance with the additional detail drawings and instruction.

E. REUSE OF DOCUMENTS:

3.05.1. The CONTRACTOR, and any Subcontractor or Supplier or other individual or entity performing or furnishing any of the WORK under a direct or indirect contract with the CONTRACTOR, shall not:

a. have or acquire any title to or ownership rights in any of the DRAWINGS, SPECIFICATIONS or other documents (or copies of any thereof) prepared by or bearing the seal of the ENGINEER or the ENGINEER's consultants, including electronic media editions; or

b. reuse any of such DRAWINGS, SPECIFICATIONS, or other documents or copies on extensions of the Project or any other project without written consent of OWNER and ENGINEER and specific written verification or adaption by the ENGINEER.

3.05.2. The prohibition of this Paragraph B will survive final payment, or termination of the CONTRACT. Nothing herein shall preclude the CONTRACTOR from retaining copies of the CONTRACT DOCUMENTS for record purposes.

F. ELECTRONIC DATA

3.06.1. Copies of data furnished by the OWNER or ENGINEER to the CONTRACTOR or CONTRACTOR to OWNER or ENGINEER that may be relied upon are limited to the printed copies (also known as hard copies). Files in electronic media format or text, data, graphics, or other types are furnished only for the convenience of the receiving party. Any conclusion or information obtained or derived from such electronic files will be at the user's sole risk. If there is a discrepancy between the electronic files and the hard copies, the hard copies govern.

3.06.2. Because data stored in electronic media format can deteriorate or be modified inadvertently or otherwise without authorization of the data's creator, the party receiving electronic files agrees that it will perform acceptance tests or procedures within 60 days, after which the receiving party shall be deemed to have accepted the data thus transferred. Any errors detected within the 60-day acceptance period will be corrected by the transferring party.

3.06.3. When transferring documents in electronic media format, the transferring party makes not representations as to long term compatibility, usability, or readability of documents resulting from the use of software application packages, operating systems, or computer hardware differing from those used by the data's creator.

ARTICLE 4 --- AVAILABILITY OF LANDS; SUBSURFACE AND PHYSICAL CONDITIONS; HAZARDOUS ENVIRONMENTAL CONDITIONS; REFERENCE POINTS

A. AVAILABILITY OF LANDS:

4.01.1. The OWNER shall furnish the lands upon which the WORK is to be performed, rights-of-way and easements for access thereto, and such other lands which are designated for the use of the CONTRACTOR, as indicated in the CONTRACT DOCUMENTS. Easements for permanent structures or permanent changes in existing facilities will be obtained and paid for by the OWNER, unless otherwise provided in the CONTRACT DOCUMENTS.

a. The OWNER shall provide the CONTRACTOR with information which delineates and describes the lands owned, and easements and rights-of-way acquired on the lands upon which the WORK is to be performed.

b. The OWNER shall notify the CONTRACTOR of any encumbrances or restrictions not of general application but specifically related to use of lands so furnished with which the CONTRACTOR will have to comply in performing the WORK.

c. Easements for permanent structures or permanent changes in existing facilities will be obtained and paid for by the OWNER, unless otherwise provided in the CONTRACT DOCUMENTS.

d. If the CONTRACTOR and OWNER are unable to agree on entitlement to or on the amount or extent, if any, of any adjustments in the CONTRACT PRICE or CONTRACT TIME or both, as a result of any delay in the OWNER's furnishing these lands, rights-of-way, easements, or parts thereof, the CONTRACTOR may make a claim therefore as provided in Article 11 and 12.

4.01.2. Upon reasonable written request, the OWNER shall furnish the CONTRACTOR with a current statement of record legal title and legal description of the lands upon which the Work is to be performed and the OWNER's interest therein as necessary for giving notice of or filing a mechanic's or construction lien against such lands in accordance with applicable Laws and Regulations.

4.01.3. The CONTRACTOR shall provide, at his own expense and without liability to the OWNER, for all additional lands and access thereto that may be required for temporary construction facilities or storage of materials and equipment.

B. SUBSURFACE AND PHYSICAL CONDITIONS:

4.02.1. Reports and Drawings. Reference is made to the Supplemental General Conditions for identification of:

a. Those reports of explorations and tests of subsurface conditions at or contiguous to the site that have been utilized by the ENGINEER in preparing the CONTRACT DOCUMENTS; and

b. Those drawings of physical conditions in or relating to existing surface or subsurface structures at or contiguous to the site (except Underground Facilities) that have been utilized by the ENGINEER in preparing the CONTRACT DOCUMENTS.

4.02.2. Limited Reliance by CONTRACTOR on Technical Data Authorized: The CONTRACTOR may rely upon the general accuracy of the "technical data" contained in such reports and drawings, but such reports and drawings are not CONTRACT DOCUMENTS. Such "technical data" is identified in the Supplemental General Conditions. Except for such reliance on such "technical data", the CONTRACTOR may not rely upon or make any claim against the OWNER, ENGINEER or any of the ENGINEER's consultants with respect to:

a. the completeness of such reports and drawings for the CONTRACTOR's purposes, including, but not limited to, any aspects of the means, methods, techniques, sequences and procedures of construction to be employed by the CONTRACTOR and safety precautions and programs incident thereto; or

b. other data, interpretations, opinions and information contained in such reports or shown or indicated in such drawings; or

c. any CONTRACTOR interpretation of or conclusion drawn from any "technical data" or any such data, interpretations, opinions, or information.

C. DIFFERING SUBSURFACE OR PHYSICAL CONDITIONS

4.03.1. Notice of Differing Subsurface or Physical Conditions: If the CONTRACTOR believes that any subsurface or physical condition at or contiguous to the site that is uncovered or revealed either:

a. is of such a nature as to establish that any "technical data" on which the CONTRACTOR is entitled to rely as provided in paragraphs 4.02 is materially inaccurate; or

b. is of such a nature as to require a change in the CONTRACT DOCUMENTS; or

c. differs materially from that shown or indicated in the CONTRACT DOCUMENTS; or

d. is of an unusual nature, and differs materially from conditions ordinarily encountered and generally recognized as inherent in work of the character provided for in the CONTRACT DOCUMENTS; then

e. the CONTRACTOR shall, promptly after becoming aware thereof and before further disturbing the subsurface or physical conditions affected thereby or performing any WORK in connection therewith (except in an emergency as permitted by Article 6), notify the OWNER and ENGINEER in writing about such conditions. The CONTRACTOR shall not further disturb such conditions or perform any WORK in connection therewith (except as aforesaid) until receipt of written order to do so.

4.03.2. ENGINEER's Review. After receipt of written notice as required above, the ENGINEER will promptly review the pertinent conditions, determine the necessity of the OWNER's obtaining additional explorations or tests with respect thereto and advise the OWNER in writing (with a copy to the CONTRACTOR) of the ENGINEER's findings and conclusions.

4.03.3. Possible Contract Document Change. If the ENGINEER concludes that a change in the CONTRACT DOCUMENTS is required as a result of a condition that meets one or more of the categories in paragraphs 4.03, a WORK CHANGE DIRECTIVE or a CHANGE ORDER will be issued as provided in Article 10 to reflect and document the consequences of such change.

4.03.4. Possible Price and Time Adjustments.

a. An equitable adjustment in the CONTRACT PRICE or CONTRACT TIME, or both, will be allowed to the extent that the existence of such uncovered or revealed condition causes an increase or decrease in the CONTRACTOR's cost of, or time required for performance of, the WORK; subject, however, to the following:

(1) such condition must meet any one or more of the categories described in paragraphs 4.03.1; and

(2) a change in the CONTRACT DOCUMENTS pursuant to paragraph 4.03.3 will not be an automatic authorization of nor a condition precedent to entitlement to any such adjustment; and

(3) with respect to Work that is paid for on a Unit Price Basis, any adjustment in the CONTRACT PRICE will be subject to the provisions of Articles 9 and 11.

b. The CONTRACTOR shall not be entitled to any adjustment in the CONTRACT PRICE or TIME if:

(1) the CONTRACTOR knew of the existence of such conditions at the time the CONTRACTOR made a final commitment to the OWNER in respect of CONTRACT PRICE and CONTRACT TIME by the submission of a bid or becoming bound under a negotiated contract; or

(2) the existence of such conditions could reasonably have been discovered or revealed as a result of any examination, investigation, exploration, test or study of the site and contiguous areas required by the BIDDING Requirements or the CONTRACT DOCUMENTS to be conducted by or for the CONTRACTOR prior to the CONTRACTOR's making such final commitment; or

(3) the CONTRACTOR failed to give the written notice within the time and as required by this paragraph.

c. If the OWNER and CONTRACTOR are unable to agree on entitlement to or as to the amount or extent, of any, of any adjustment in the CONTRACT PRICE or CONTRACT TIME, or both, a claim may be made therefore as provided in Articles 11 and 12. However, the OWNER, ENGINEER, and any of ENGINEER's consultants shall not be liable to the CONTRACTOR for any claims, costs, losses or damages (including but not limited to all fees and charges of engineers, attorneys, and other professionals and all court or arbitration or other dispute resolution costs) sustained by the CONTRACTOR on or in connection with any other project or anticipated project.

D. UNDERGROUND FACILITIES

4.04.1. Shown or Indicated. The information and data shown or indicated in the CONTRACT DOCUMENTS with respect to existing Underground Facilities at or contiguous to the site is based on information and data furnished to the OWNER or ENGINEER by the owners of such Underground Facilities or by others. Unless it is otherwise expressly provided in the Supplemental General Conditions:

a. the OWNER and ENGINEER shall not be responsible for the accuracy or completeness of any such information or data; and

b. The cost of all of the following will be included in the CONTRACT PRICE and the CONTRACTOR shall have full responsibility for:

(1) reviewing and checking all such information and data,
(2) locating all Underground Facilities shown or indicated in the CONTRACT DOCUMENTS,
(3) coordination of the WORK with the owners of such Underground Facilities during construction, and
(4) the safety and protection of all such Underground Facilities and repairing any damage thereto resulting from the WORK.

4.04.2. Not Shown or Indicated:

a. If an Underground Facility is uncovered or revealed at or contiguous to the site which was not shown or indicated in the CONTRACT DOCUMENTS, the CONTRACTOR shall promptly after becoming aware thereof and before further disturbing conditions affected thereby or performing any WORK in connection therewith (except in an emergency as permitted by Article 6), identify the owner of such Underground Facility and give written notice thereof to that owner and to the OWNER and ENGINEER. The ENGINEER will promptly review the Underground Facility to determine the extent, if any, to which a change is required in the CONTRACT DOCUMENTS to reflect and document the consequences of the existence of the Underground Facility. During such time, the CONTRACTOR shall be responsible for the safety and protection of such Underground Facility.

b. If the ENGINEER concludes that a change in the CONTRACT DOCUMENTS is required, a Work Change Directive or a Change Order will be issued as provided in Article 10 to reflect and document such consequences. An equitable adjustment shall be made in the CONTRACT PRICE or CONTRACT TIME, or both, to the extent that they are attributable to the existence or location of any Underground Facility that was not shown or indicated with reasonable accuracy in the CONTRACT DOCUMENTS and the CONTRACTOR did not know of and could not reasonably have been expected to be aware of or to have anticipated. If the OWNER and CONTRACTOR are unable to agree on entitlement to or the amount or extent, if any, of any such adjustment in CONTRACT PRICE or CONTRACT TIME, the OWNER or CONTRACTOR may make a claim therefore as provided in Articles 11 and 12. However, the OWNER, ENGINEER, and ENGINEER's Consultants shall not be liable to the CONTRACTOR for any claims, costs, losses, or damages incurred or sustained by the CONTRACTOR on or in connection with any other project or anticipated project.

E. REFERENCE POINTS.

4.05, The OWNER shall provide engineering surveys to establish reference points for construction which in the ENGINEER's judgment are necessary to enable the CONTRACTOR to proceed with the WORK. The CONTRACTOR shall be responsible for laying out the WORK (unless otherwise specified in the General Requirements), shall protect and preserve the established reference points and shall make no changes or relocations without the prior written approval of the OWNER. The CONTRACTOR shall report to the ENGINEER whenever any reference point or property monument is lost or destroyed or requires relocation because of necessary changes in grades or locations, and shall be responsible for the accurate replacement or relocation of such reference points and property monuments by professionally qualified personnel.

F. HAZARDOUS ENVIRONMENTAL CONDITION AT SITE

4.06.1. Reports and Drawings: Reference is made to the Supplemental General Conditions for the identification of those reports and drawings relating to a Hazardous Environmental Condition identified at the Site, if any, that have been utilized by the ENGINEER in the preparation of the CONTRACT DOCUMENTS.

4.06.2. Limited Reliance by CONTRACTOR on Technical Data Authorized: The CONTRACTOR may rely upon the general accuracy of the "technical data" contained in such reports and drawings, but such reports and drawings are not CONTRACT DOCUMENTS. Such "technical data" is identified in the Supplemental General Conditions. Except for such reliance on such "technical data", the CONTRACTOR may not rely upon or make any claim against the OWNER, ENGINEER or any of the ENGINEER's consultants with respect to:

a. the completeness of such reports and drawings for the CONTRACTOR's purposes, including, but not limited to, any aspects of the means, methods, techniques, sequences and procedures of construction to be employed by the CONTRACTOR and safety precautions and programs incident thereto; or

b. other data, interpretations, opinions and information contained in such reports or shown or indicated in such drawings; or

c. any CONTRACTOR interpretation of or conclusion drawn from any "technical data" or any such data, interpretations, opinions, or information.

4.06.3. The CONTRACTOR shall not be responsible for any Hazardous Environmental Condition uncovered or revealed at the Work Site which was not shown or indicated in the Drawings and Specification or indentified in the CONTRACT DOCUMENTS to be within the scope of the Work. The CONTRACTOR shall be responsible for a Hazardous Environmental Condition created with any materials brought to the Site by the CONTRACTOR, Subcontractors, Suppliers, or anyone else for whom the CONTRACTOR is

responsible.

4.06.4. If the CONTRACTOR encounters a Hazardous Environmental Condition or if the CONTRACTOR or anyone for whom the CONTRACTOR is responsible creates a Hazardous Environmental Condition, the CONTRACTOR shall immediately: (i) secure or otherwise isolate such condition; (ii) stop all work in connection with such hazardous condition and in any area affected thereby (except in an emergency as required by Article 6; and (iii) notify the OWNER and ENGINEER (and promptly thereafter confirm such notice in writing).

a. The OWNER shall promptly consult with the ENGINEER concerning the necessity for the OWNER to retain a qualified expert to evaluate such hazardous condition or take corrective action, if any.

4.06.5. The CONTRACTOR shall not be required to resume work in connection with such hazardous condition or in any such affected area until after the OWNER has obtained any required permits related thereto and deliver to the CONTRACTOR special written notice: (i) specifying that such condition and any affected area is or has been rendered safe for the resumption of Work, or (ii) specifying any special conditions under which such Work may be resumed safely.

a. If the OWNER and CONTRACTOR cannot agree as to entitlement to or the amount or extent of an adjustment, if any, in the CONTRACT PRICE or CONTRACT TIMES as a result of such Work stoppage or such special conditions under which Work is agreed by the CONTRACTOR to be resumed, either party may make a claim therefore as provided in Articles 11 and 12.

4.06.6. If after receipt of such special written notice the CONTRACTOR does not agree to resume such Work based on a reasonable belief it is unsafe, or does not agree to resume such Work under such special conditions, then the OWNER may order such portion of the Work that is in connection with such hazardous condition or in such affected area to be deleted from the Work.

a. If the OWNER and CONTRACTOR cannot agree as to entitlement to or the amount or extent of an adjustment, if any, in the CONTRACT PRICE or CONTRACT TIMES as a result of deleting such portion of the Work, then either party may make a claim therefore as provided in Articles 11 and 12.

b. The OWNER may have such deleted portion of the Work performed by the OWNER's own forces or others in accordance with Article 7.

4.06.7. To the fullest extent permitted by Laws and Regulations, the OWNER shall indemnify and hold harmless the CONTRACTOR, Subcontractors, ENGINEER, ENGINEER's Consultants and the officers, directors, employees, agents, other consultants and subcontractors of each and any of them from and against all claims, costs, losses and damages (including but not limited to all fees and charges of engineers, attorneys, and other professionals and all court or arbitration or other dispute resolution costs) arising out of or relating to a Hazardous Environmental Condition, provided that such Condition: (i) was not shown or indicated in the Drawings or Specifications or identified in the CONTRACT DOCUMENTS to be included within the scope of the Work, and (ii) was not created by the CONTRACTOR or by anyone for whom the CONTRACTOR is responsible. Nothing in this Paragraph shall obligate the OWNER to indemnify any individual or entity from and against the consequences of that individual's or entity's own negligence.

4.06.8. To the fullest extent permitted by Laws and Regulations, the CONTRACTOR shall indemnify and hold harmless the OWNER and ENGINEER, and the officers, directors, partners, employees, agents, consultants, and subcontractors of each and any of them from and against all claims, costs, losses, and damages (including but not limited to all fees and charges of engineers, attorneys, and other professionals and all court or arbitration or other dispute resolution costs) arising out of or relating to a Hazardous Environmental Condition created by the CONTRACTOR or by anyone for whom the CONTRACTOR is responsible. . Nothing in this Paragraph shall obligate the CONTRACTOR to indemnify any individual or entity from and against the consequences of that individual's or entity's own negligence.

4.06.9. The provisions of Paragraphs B, C and D do not apply to a Hazardous Environmental uncovered or revealed at the Work Site.

ARTICLE 5 — BONDS AND INSURANCE.

A. PERFORMANCE, PAYMENT AND OTHER BONDS:

5.01.1. The CONTRACTOR shall furnish PERFORMANCE and PAYMENT BONDS, each in an amount at least equal to the CONTRACT PRICE as security for the faithful performance and payment of all CONTRACTOR's obligations under the CONTRACT DOCUMENTS. These BONDS shall remain in effect at least until one year after the date when final payment becomes due, except as otherwise provided by LAW or REGULATION or by the CONTRACT DOCUMENTS. The CONTRACTOR shall also furnish such other Bonds as are required by the Supplemental General Conditions.

5.01.2. All BONDS shall be in the forms prescribed by the CONTRACT DOCUMENTS, except as provided by LAWS or REGULATIONS, and be executed by such sureties as are named in the current list of "Companies Holding Certificates of Authority as Acceptable Sureties on Federal Bonds and as Acceptable Reinsuring Companies" as published in Circular 570 (amended) by the

Audit Staff, Bureau of Government Financial Operations, U.S. Treasury Department. All BONDS signed by an agent must be accompanied by a certified copy of such agent's authority to act.

5.01.3. If the surety on any BOND furnished by the CONTRACTOR is declared a bankrupt or becomes insolvent or its right to do business is terminated in any state where any part of the Project is located or it ceases to meet the requirements of paragraph 5.01.2, the CONTRACTOR shall promptly notify the OWNER and ENGINEER and shall, within 20 days after the event giving rise to such notification, provide another bond and surety, both of which shall comply with the requirements of Paragraph 5.01.2 and Paragraph B, and shall be acceptable to the OWNER.

B. LICENSED SURETIES AND INSURERS

5.02. All BONDS and insurance required by the CONTRACT DOCUMENTS to be purchased and maintained by the OWNER or CONTRACTOR shall be obtained from surety or insurance companies that are duly licensed or authorized in the jurisdiction in which the Project is located to issue the BONDS or insurance policies for the limits and coverages so required.
Such surety and insurance companies shall also meet such additional requirements and qualifications as may be provided in the Supplemental General Conditions.

C. CERTIFICATES OF INSURANCE

5.03.1. The CONTRACTOR shall deliver to the OWNER, with copies to each additional insured identified in the Supplemental General Conditions, certificates of insurance (and other evidence of insurance requested by the OWNER or any other additional insured) which the CONTRACTOR is required to purchase and maintain in accordance with Article 5.

5.03.2. The OWNER shall deliver to the CONTRACTOR, with copies to each additional insured identified in the Supplemental Conditions, certificates of insurance (and other evidence of insurance requested by the CONTRACTOR or any other additional insured) which the OWNER is required to purchase and maintain in accordance with Article 5.

D. CONTRACTOR'S LIABILITY INSURANCE:

5.04.1. The CONTRACTOR shall purchase and maintain such comprehensive general liability and other insurance as is appropriate for the WORK being performed and furnished and as will provide protection from claims set forth below which may arise out of or result from the CONTRACTOR's performance and furnishing of the WORK and CONTRACTOR's other obligations under the CONTRACT DOCUMENTS, whether it is to be performed or furnished by the CONTRACTOR, any Subcontractor or Supplier, or by anyone directly or indirectly employed by any of them to perform or furnish any of the WORK, or by anyone for whose acts any of them may be liable:

a. Claims under workers' compensation, disability benefits and other similar employee benefit acts;

b. Claims for damages because of bodily injury, occupational sickness or disease, or death of the CONTRACTOR's employees;

c. Claims for damages because of bodily injury, sickness or disease, or death of any person other than the CONTRACTOR's employees;

d. Claims for damages insured by customary personal injury liability coverage which are sustained: (i) by any person as a result of an offense directly or indirectly related to the employment of such person by the CONTRACTOR; or (ii) by any other person for any other reason;

e. Claims for damages, other than to the WORK itself, because of injury to or destruction of tangible property wherever located, including loss of use resulting there from; and

f. Claims for damages because of bodily injury or death of any person or property damage arising out of the ownership, maintenance or use of any motor vehicle.

5.04.2. The policies of insurance so required by paragraph 5.04 to be purchased and maintained shall:

a. with respect to insurance required by paragraphs 5.04, include as additional insured (subject to any customary exclusion in respect of professional liability) the OWNER, ENGINEER, and any other persons or entities identified in the Supplemental General Conditions, all of whom shall be listed as additional insured, and include coverage for the respective officers, directors, partners, employees, agents, consultants and subcontractors of each and any of all such additional insured, and the insurance afforded to these additional insured shall provide primary coverage for all claims covered thereby;

b. include at least the specific coverages and be written for not less than the limits of liability provided in the Supplemental General Conditions or required by Laws and Regulations, whichever is greater;

c. include completed operations insurance;

d. include contractual liability insurance covering the CONTRACTOR's indemnity obligations under applicable portions of Article 6;

e. contain a provision or endorsement that the coverage afforded will not be cancelled, materially changed or renewal refused until at least 30 days prior written notice has been given to the OWNER and CONTRACTOR and to each other additional insured identified in the Supplemental General Conditions to whom a certificate of insurance has been issued (and the certificates of insurance furnished by the CONTRACTOR pursuant to Article 5 will so provide);

f. remain in effect in effect at least until final payment and at all times thereafter when the CONTRACTOR may be correcting, removing or replacing defective WORK in accordance with Article 13; and

g. with respect to completed operations insurance, and any insurance coverage written on a claims-made basis, remain in effect for at least two years after final payment.

(1) the CONTRACTOR shall furnish the OWNER and each other additional insured identified in the Supplemental General Conditions to whom a certificate of insurance has been issued evidence, satisfactory to the OWNER and any such additional insured, of continuation of such insurance at final payment and one year thereafter.

E. OWNER'S LIABILITY INSURANCE:

5.05. In addition to the insurance required to be provided by the CONTRACTOR under paragraph 5.04, the OWNER, at the OWNER's option, may purchase and maintain at the OWNER's expense the OWNER's own liability insurance as will protect the OWNER against claims which may arise from operations under the CONTRACT DOCUMENTS.

F. PROPERTY INSURANCE:

5.06.1. Unless otherwise provided in the Supplemental General Conditions, the OWNER shall purchase and maintain property insurance upon the WORK at the site in the amount of the full replacement cost thereof (subject to such deductible amounts as may be provided in the Supplemental General Conditions or required by LAWS and REGULATIONS). This insurance shall:

a. include the interests of the OWNER, CONTRACTOR, Subcontractors, ENGINEER and ENGINEER's consultants and any other persons or entities identified in the Supplemental General Conditions, each of whom is deemed to have an insurable interest and shall be listed as an insured or additional issued;

b. be written on a Builder's Risk "all risk" or open peril or special causes of loss policy form that shall at least include insurance for physical loss and damage to the Work, temporary buildings, false work and Work in transit and shall insure against at least the following perils or causes of loss: fire, lightning, extended coverage, theft, vandalism and malicious mischief, earthquake, collapse, debris removal, demolition occasioned by enforcement of Laws and Regulations, water damage (other than caused by flood), and such other perils as may be specifically required by the Supplementary General Conditions;

c. include expenses incurred in the repair or replacement of any insured property (including but not limited to fees and charges of engineers and architects);

d. cover materials and equipment stored at the site or at another location that was agreed to in writing by the OWNER prior to being incorporated in the Work, provided that such materials and equipment have been included in an Application for Payment recommended by the ENGINEER;

e. allow for partial utilization of the Work by the OWNER;

f. include testing and startup; and

g. be maintained in effect until final payment is made unless otherwise agreed to in writing by the OWNER, CONTRACTOR and ENGINEER with 30 days written notice to each other additional insured to whom a certificate of insurance has been issued.

5.06.2. The OWNER shall purchase and maintain such boiler and machinery insurance or additional property insurance as may be required by the Supplemental General Conditions or LAWS and REGULATIONS which will include the interests of the OWNER, CONTRACTOR, Subcontractors, ENGINEER and ENGINEER's consultants and any other persons or entities identified in the Supplemental Conditions, each of whom is deemed to have an insurable interest and shall be listed as insured or additional insured.

5.06.3. All the policies of insurance (and the certificates or other evidence thereof) required to be purchased and maintained by the OWNER in accordance with applicable portions of Article 5 will contain a provision or endorsement that the coverage afforded will not be cancelled or materially changed or renewal refused until at least thirty days' prior written notice has been given to the OWNER and CONTRACTOR and to each other additional insured to whom a certificate of insurance has been issued and will contain waiver provisions in accordance with applicable portions of Article 5.

5.06.4. The OWNER shall not be responsible for purchasing and maintaining any property insurance to protect the interests of the CONTRACTOR, Subcontractors or others in the WORK to the extent of any deductible amounts that are provided in the Supplementary Conditions. The risk of loss within such identified deductible amount, will be borne by the CONTRACTOR, Subcontractors or others suffering any such loss and if any of them wishes property insurance coverage within the limits of such amounts, each may purchase and maintain it at the purchaser's own expense.

5.06.5. If the CONTRACTOR requests in writing that other special insurance be included in the property insurance policies, provided under applicable portions of Article 5, the OWNER shall, if possible, include such insurance, and the cost thereof will be charged to the CONTRACTOR by appropriate CHANGE ORDER. Prior to commencement of the WORK at the site, the OWNER shall in writing advise the CONTRACTOR whether or not such other insurance has been procured by the OWNER.

G. WAIVER OF RIGHTS

5.07.1. The OWNER and CONTRACTOR intend that all policies purchased in accordance with applicable portions of Article 5 will protect the OWNER, CONTRACTOR, Subcontractors, ENGINEER, ENGINEER's Consultants and all other persons or entities identified in the Supplemental Conditions to be listed as insured or additional insured in such policies and will provide primary coverage for all losses and damages caused by the perils covered thereby. All such policies shall contain provisions to the effect that in the event of payment of any loss or damage the insurers will have no rights of recovery against any of the insured or additional insured there under. The OWNER and CONTRACTOR waive all rights against each other and their respective officers, directors, employees and agents for all losses and damages caused by, arising out of or resulting from any of the perils covered by such policies and any other property insurance applicable to the Work; and, in addition, waive all such rights against Subcontractors, ENGINEER, ENGINEER's Consultants and all other persons or entities identified in the Supplemental Conditions to be listed as insured or additional insured under such policies for losses and damages so caused. None of the above waivers shall extend to the rights that any party making such waiver may have to the proceeds of insurance held by the OWNER as trustee or otherwise payable under any policy so issued.

5.07.2. The OWNER waives all rights against the CONTRACTOR, Subcontractors, ENGINEER, ENGINEER's Consultants and the officers, directors, employees and agents of any of them, for:

a. loss due to business interruption, loss of use or other consequential loss extending beyond direct physical loss or

damage to the OWNER's property of the Work caused by , arising out of or resulting from fire or other peril, whether or not insured by the OWNER; and

b. loss or damage to the completed Project or part thereof caused by, arising out of or resulting from fire or other insured peril covered by any property insurance maintained on the completed Project or part thereof by the OWNER during partial utilization pursuant to paragraph 14.10, after substantial completion pursuant to paragraph 14.8 or after final payment pursuant to paragraph 14.13.

5.07.3. Any insurance policy maintained by the OWNER covering any loss, damage or consequential loss referred to in applicable portions of Article 5 shall contain provisions to the effect that in the event of payment of any such loss, damage or consequential loss the insurers will have no rights of recovery against any of the CONTRACTOR, Subcontractors, ENGINEER, ENGINEER's Consultants and the officers, directors, employees and agents of any of them.

H. RECEIPT AND APPLICATION OF PROCEEDS:

5.08.1. Any insured loss under the policies of insurance required by paragraphs 5.7 and 5.8 will be adjusted with the OWNER and made payable to the OWNER as fiduciary for the insured, as their interests may appear, subject to the requirements of any applicable mortgage clause and of paragraph 5.13. The OWNER shall deposit in a separate account any money so received, and shall distribute it in accordance with such agreement as the parties in interest may reach. If no other special agreement is reached the damaged WORK shall be repaired or replaced, the moneys so received applied on account thereof and the WORK and the cost thereof covered by an appropriate CHANGE ORDER.

5.08.2. The OWNER as fiduciary shall have power to adjust and settle any loss with the insurers unless one of the parties in interest shall object in writing within fifteen days after the occurrence of loss to the OWNER's exercise of this power. If such objection be made, the OWNER as fiduciary shall make settlement with the insurers in accordance with such agreement as the parties in interest may reach. If no such agreement among the parties in interest is reached, the OWNER as fiduciary shall adjust

and settle the loss with the insurers and, if required in writing by any party in interest, the OWNER as fiduciary shall give bond for the proper performance of such duties.

I. ACCEPTANCE OF BONDS AND INSURANCE; OPTION TO REPLACE:

5.09. If either party (the OWNER or CONTRACTOR) has any objection to the coverage afforded by or other provisions of the Bonds or insurance required to be purchased and maintained by the other party in accordance with Article 5 on the basis of non-conformance with the CONTRACT DOCUMENTS, the objecting party shall so notify the other party in writing within ten days after receipt of the certificates (or other evidence requested) required by paragraph 2.7. the OWNER and CONTRACTOR shall each provide to the other such additional information in respect of insurance provided as the other may reasonably request. If either party does not purchase or maintain all of the Bonds and insurance required of such party by the CONTRACT DOCUMENTS, such party shall notify the other party in writing of such failure to purchase prior to the start of Work, or of such failure to maintain prior to any change in the required coverage. Without prejudice to any other right or remedy, the other party may elect to obtain equivalent Bonds or insurance to protect such other party's interests at the expense of the party who was required to provide such coverage, and a Change Order shall be issued to adjust the Contract Price accordingly.

J. PARTIAL UTILIZATION, ACKNOWLEDGMENT OF PROPERTY INSURANCE:

5.10. If the OWNER finds it necessary to occupy or use a portion or portions of the WORK prior to SUBSTANTIAL COMPLETION of all the WORK, such use or occupancy may be accomplished in accordance with paragraph 14.10; provided that no such use or occupancy shall commence before the insurers providing the property insurance have acknowledged notice thereof and in writing effected any changes in coverage necessitated thereby. The insurers providing the property insurance shall consent by endorsement on the policy or policies, but the property insurance shall not be cancelled or permitted to lapse on account of any such partial use or occupancy.

ARTICLE 6 --- CONTRACTOR'S RESPONSIBILITIES.

A. SUPERVISION AND SUPERINTENDENCE:

6.01.1. The CONTRACTOR shall supervise, inspect and direct the WORK competently and efficiently, devoting such attention thereto and applying such skills and expertise as may be necessary to perform the WORK in accordance with the CONTRACT DOCUMENTS. The CONTRACTOR shall be solely responsible for the means, methods, techniques, sequences and procedures of construction. The CONTRACTOR shall not be responsible for the negligence of OWNER or ENGINEER in the design or specifications of a specific means, method, technique, sequence or procedure of construction which is shown or indicated in and expressly required by the CONTRACT DOCUMENTS.

6.01.2. The CONTRACTOR shall be responsible to see that the completed WORK complies accurately with the CONTRACT DOCUMENTS.

6.01.3. At all times during its progress of the Work, the CONTRACTOR shall assign a competent resident superintendent, who shall not be replaced without written notice to the OWNER and ENGINEER, except under extra-ordinary circumstances. The superintendent will be the CONTRACTOR's representative at the site and shall have authority to act on behalf of the CONTRACTOR. All communications given to or received from the superintendent shall be binding on the CONTRACTOR.

B. LABOR; WORKING HOURS

6.02.1. The CONTRACTOR shall provide competent, suitably qualified personnel to survey and lay out the Work and perform construction as required by the CONTRACT DOCUMENTS. The CONTRACTOR shall at all times maintain good discipline and order at the Work site.

6.02..2. Except as otherwise required for the safety or protection of persons or the Work or property at the Work site or adjacent thereto, and except as otherwise stated in the CONTRACT DOCUMENTS, all Work at the site shall be performed during regular working hours. The CONTRACTOR will not permit the performance of Work on a Saturday, Sunday, or any legal holiday without the OWNER's written consent (which will not be unreasonably withheld) given after prior written notice to the ENGINEER.

C. SERVICES, MATERIALS, AND EQUIPMENT

6.03.1. Unless otherwise specified in the General Requirements, the CONTRACTOR shall furnish and assume full responsibility for all services, materials, equipment, labor, transportation, construction equipment and machinery, tools, appliances, fuel, power, light, heat, telephone, water, sanitary facilities, temporary facilities and all other facilities and incidentals necessary for the performance, testing, start-up and completion of the WORK.

6.03.2. All materials and equipment incorporated into the Work shall be as specified or, if not specified, shall be of good quality and new, except as otherwise provided in the CONTRACT DOCUMENTS. All special warranties and guarantees required by the Specifications shall expressly run to the benefit of the OWNER. If required by the ENGINEER, the CONTRACTOR shall

furnish satisfactory evidence (including reports of required tests) as to the source, kind and quality of materials and equipment.

6.03.3. All materials and equipment shall be stored, applied, installed, connected, erected, protected, used, cleaned and conditioned in accordance with instructions of applicable Supplier, except as otherwise provided in the CONTRACT DOCUMENTS.

D. PROGRESS SCHEDULE:

6.04.1. The CONTRACTOR shall adhere to the progress schedule established in accordance with paragraph 2.9 as it may be adjusted from time to time as provided below:

a. The CONTRACTOR shall submit to the ENGINEER for acceptance (to the extent indicated in paragraph 2.9) proposed adjustments in the Progress Schedule that will not change the Contract Times (or Milestones). Such adjustments will conform generally to the Progress Schedule then in effect and additionally will comply with any provisions of the General Requirements applicable thereto.

b. Proposed adjustments in the Progress Schedule that will change the Contract Times (or Milestones) shall be submitted in accordance with the requirements of Article 12. Adjustments In Contract Times may only be made by a Change Order in accordance with Article 12.

E. SUBSTITUTES OR "OR-EQUAL" ITEMS:

6.05.1. Whenever an item of material or equipment is specified or described in the CONTRACT DOCUMENTS by using the name of a proprietary item or the name of a particular Supplier, the specification or description is intended to establish the type, function, appearance, and quality required. Unless the specification or description contains or is followed by words reading that no like, equivalent or “or-equal” item or no substitution is permitted, other items of material or equipment or material or equipment of other Suppliers may be accepted by the ENGINEER under the following circumstances described below:

a. “Or-Equal” Items: If in the ENGINEER’s sole discretion an item of material or equipment proposed by the CONTRACTOR is functionally equal to that named and sufficiently similar so that no change in related Work will be required, it may be considered by the ENGINEER as an “or-equal” item, in which case review and approval of the proposed item may, in the ENGINEER’S sole discretion, be accomplished without compliance with some or all of the requirements for acceptance of proposed substitute items. For the purposes of this paragraph, a proposed item of material or equipment will be considered functionally equal to an item named if:

(1) in the exercise of reasonable judgment the ENGINEER determines that:

(a) it is at least equal in materials of construction, quality, durability, appearance, strength and design characteristics;

(b) it will reliably perform at least equally well the function and achieve the results imposed by the design concept of the completed project as a functioning whole;

(c) it has a proven record of performance and availability of responsive service; and

(2) the CONTRACTOR certifies that, if approved and incorporated into the Work:

(a) there will be no increase in cost to the OWNER or increase in Contract Times; and

(b) it will conform substantially to the detailed requirements of the item named in the CONTRACT DOCUMENTS.

b. Substitute Items:

(1) If in the ENGINEER’s sole discretion an item of material or equipment proposed by the CONTRACTOR does not qualify as an “or-equal” item under paragraph “a” above, it will be considered a proposed substitute item.

(2) The CONTRACTOR shall submit sufficient information as provided below to allow the ENGINEER to determine that the item of material or equipment proposed is essentially equivalent to that named and an acceptable substitute therefore. Requests for review of proposed substitute items of material or equipment will not be accepted by the ENGINEER from anyone other than the CONTRACTOR.

(3) The requirements for review by the ENGINEER will be as set forth in the applicable portions of the General Requirements and as the ENGINEER may decide is appropriate under the circumstances.

(4) If the CONTRACTOR wishes to furnish or use a substitute item of material or equipment, the CONTRACTOR shall make written application to the ENGINEER for review of a proposed substitute item of material or equipment that the CONTRACTOR seeks to furnish or use. The application:

(a) shall certify that the proposed substitute item will:

(i) perform adequately the functions and achieve the results called for by the general design;

(ii) be similar in substance to that specified; and

(iii) be suited to the same use as that specified.

(b) will state:

(i) the extent, if any, to which the use of the proposed substitute item will prejudice the CONTRACTOR’s achievement of Substantial Completion on time;

(ii) whether or not acceptance of the substitute for use in the WORK will require a change in any of the CONTRACT DOCUMENTS (or in the provisions of any other direct contract with the OWNER for work on the Project) to adapt the

design to the proposed substitute item;

(iii) whether or not incorporation or use of the substitute item in connection with the WORK is subject to payment of any license fee or royalty.

(c) will identify:

(i) all variations of the proposed substitute from that specified; and

(ii) available engineering, sales, maintenance, repair and replacement service.

(d) and shall contain an itemized estimate of all costs or credits that will result directly or indirectly from use of such substitute item, including costs of redesign and claims of other contractors affected by the resulting change, all of which shall be considered by the ENGINEER in evaluating the proposed substitute.

(5) The ENGINEER may require the CONTRACTOR to furnish additional data about the proposed substitute item.

6.05.2. Substitute Construction Methods or Procedures: If a specific means, method, technique, sequence or procedure of construction is expressly required by the CONTRACT DOCUMENTS, the CONTRACTOR may furnish or utilize a substitute means, method, technique, sequence or procedure of construction acceptable to the ENGINEER. The CONTRACTOR shall submit sufficient information to allow the ENGINEER, in the ENGINEER's sole discretion, to determine that the substitute proposed is equivalent to that expressly called for by the CONTRACT DOCUMENTS. The requirements for review by the ENGINEER will be similar to those provided in paragraph 6.05.1.b.

6.05.3. Engineer's Evaluation: The ENGINEER will be allowed a reasonable time within which to evaluate each proposal or submittal made pursuant to applicable portions of Article 6. The ENGINEER will be the sole judge of acceptability. No "or-equal" or substitute will be ordered, installed or utilized until the ENGINEER's review is complete, which will be evidenced by either a CHANGE ORDER for a substitute or an approved SHOP DRAWING for an "or equal". The ENGINEER will advise the CONTRACTOR in writing of any negative determination.

6.05.4. Special Guarantee: The OWNER may require the CONTRACTOR to furnish at the CONTRACTOR's expense a special performance guarantee or other surety with respect to any substitute.

6.05.5. Engineer's Cost Reimbursement: The ENGINEER will record the ENGINEER's costs in evaluating a substitute proposed or submitted by the CONTRACTOR pursuant to applicable portions of Article 6. Whether or not the ENGINEER accepts a substitute item so proposed or submitted by the CONTRACTOR, the CONTRACTOR shall reimburse the OWNER for the charges of the ENGINEER for making changes in the CONTRACT DOCUMENTS (or in the provisions of any other direct contract with the OWNER) resulting from the acceptance of each proposed substitute item.

F. CONCERNING SUBCONTRACTORS, SUPPLIERS AND OTHERS:

6.06.1. The CONTRACTOR shall not employ any Subcontractor, Supplier or other person or organization (including those acceptable to the OWNER and ENGINEER as indicated in Article 6), whether initially or as a replacement, against whom the OWNER or ENGINEER may have reasonable objection. The CONTRACTOR shall not be required to employ any Subcontractor, Supplier or other person or organization to furnish or perform any of the WORK against whom the CONTRACTOR has reasonable objection.

6.06.2. If the Supplemental General Conditions require the identity of certain Subcontractors, Suppliers or other persons or organizations (including those who are to furnish the principal items of materials and equipment) to be submitted to the OWNER in advance for acceptance by the OWNER and ENGINEER by a specified date prior to the Effective Date of the AGREEMENT, and if the CONTRACTOR has submitted a list thereof in accordance with the Supplemental General Conditions, the OWNER or ENGINEER's acceptance (either in writing or by failing to make written objection thereto by the date indicated for acceptance or objection in the bidding documents or the CONTRACT DOCUMENTS) of any such Subcontractor, Supplier or other person or organization so identified may be revoked on the basis of reasonable objection after due investigation. The CONTRACTOR shall submit an acceptable substitute for the rejected Subcontractor, Supplier, or other individual on entity, and the CONTRACT PRICE will be adjusted by the difference in the cost occasioned by such substitution and an appropriate CHANGE ORDER will be issued. No acceptance by the OWNER or ENGINEER of any such Subcontractor, Supplier or other person or organization shall constitute a waiver or any right of the OWNER or ENGINEER to reject defective WORK.

6.06.3. The CONTRACTOR shall be fully responsible to the OWNER and ENGINEER for all acts and omissions of the Subcontractors, Suppliers and other persons and organizations performing or furnishing any of the WORK just as the CONTRACTOR is responsible for the CONTRACTOR's own acts and omissions. Nothing in the CONTRACT DOCUMENTS:

a. shall create for the benefit of any such Subcontractor, Supplier or other person or organization any contractual relationship between the OWNER or ENGINEER and any such Subcontractor, Supplier or other person or organization; nor

b. shall create any obligation on the part of the OWNER or ENGINEER to pay or to see to the payment of any moneys due any such Subcontractor, Supplier or other person or organization except as may otherwise be required by LAWS and REGULATIONS.

6.06.4. The CONTRACTOR shall be solely responsible for scheduling and coordinating the Work of Subcontractors, Suppliers and other persons and organizations performing or furnishing any of the Work under a direct or indirect contract with the

CONTRACTOR.

6.06.5 The CONTRACTOR shall require all Subcontractors, Suppliers and such other persons and organizations performing and furnishing any of the Work to communicate with the ENGINEER through the CONTRACTOR.

6.06.6. The divisions and sections of the Specifications and the identifications of any DRAWING shall not control the CONTRACTOR in dividing the WORK among Subcontractors or Suppliers or delineating the WORK to be performed by any specific trade.

6.06.7. All WORK performed for the CONTRACTOR by a Subcontractor or Supplier will be pursuant to an appropriate agreement between the CONTRACTOR and the Subcontractor or Supplier which specifically binds the Subcontractor or Supplier to the applicable terms and conditions of the CONTRACT DOCUMENTS for the benefit of the OWNER and ENGINEER. Whenever any such agreement is with a Subcontractor or Supplier who is listed as an additional insured on the property insurance provided in applicable portions of Article 5, the agreement between the CONTRACTOR and the Subcontractor or Supplier will contain provisions whereby the Subcontractor or Supplier waives all rights against the OWNER, CONTRACTOR, ENGINEER, ENGINEER's Consultants and all other additional insured for all losses and damages caused by, arising out of or resulting from any of the perils covered by such policies and any other property insurance applicable to the Work. If the insurers on any such policies require separate waiver forms to be signed by any Subcontractor or Supplier, the CONTRACTOR will obtain the same.

G. PATENT FEES AND ROYALTIES:

6.07.1. The CONTRACTOR shall pay all license fees and royalties and assume all costs incident to the use in the performance of the WORK or the incorporation in the WORK of any invention, design, process, product or device which is the subject of patent rights or copyrights held by others. If a particular invention, design, process, product or device is specified in the CONTRACT DOCUMENTS for use in the performance of the WORK and if to the actual knowledge of the OWNER or ENGINEER its use is subject to patent rights or copyrights calling for the payment of any license fee or royalty to others, the existence of such rights shall be disclosed by the OWNER in the CONTRACT DOCUMENTS.

6.07.2. To the fullest extent permitted by Laws and Regulations, the CONTRACTOR shall indemnify and hold harmless the OWNER, ENGINEER, ENGINEER's Consultants and the officers, directors, employees, agents and other consultants of each and any of them from and against all claims, costs, losses and damages (including but not limited to all fees and charges of engineers, attorneys, and other professionals and all court or arbitration or other dispute resolution costs) arising out of or resulting from any infringement of patent rights or copyrights incident to the use in the performance of the WORK or resulting from the incorporation in the WORK of any invention, design, process, product or device not specified in the CONTRACT DOCUMENTS.

H. PERMITS:

6.08. Unless otherwise provided in the Supplemental General Conditions, the CONTRACTOR shall obtain and pay for all construction permits and licenses. The OWNER shall assist the CONTRACTOR, when necessary, in obtaining such permits and licenses. The CONTRACTOR shall pay all governmental charges and inspection fees necessary for the prosecution of the WORK, which are applicable at the time of opening of BIDS, or, if there are no BIDS, on the Effective Date of the AGREEMENT. The OWNER shall pay all charges of utility owners for connections for providing permanent service to the WORK.

I. LAWS AND REGULATIONS:

6.09.1 The CONTRACTOR shall give all notices and comply with all Laws and Regulations applicable to the performance of the Work. Except where otherwise expressly required by applicable Laws and Regulations, neither the OWNER nor ENGINEER shall be responsible for monitoring the CONTRACTOR's compliance with any Laws or Regulations.

6.09.2 If the CONTRACTOR performs any Work knowing or having reason to know that it is contrary to Laws or Regulations, the CONTRACTOR shall bear all claims, costs, losses and damages (including but not limited to all fees and charges of engineers, attorneys, and other professionals and all court or arbitration or other dispute resolution costs) arising out of or relating to such Work. However, it shall not be the CONTRACTOR's primary responsibility to make certain that the Specifications and Drawings are in accordance with Laws and Regulations, but this shall not relieve the CONTRACTOR of CONTRACTOR's obligations under Article 3.

6.09.3. Changes in Laws or Regulations not known at the time of the opening of Bids (or, on the Effective Date of the Agreement if there were no Bids) having an effect on the cost or time of performance of the Work shall be the subject of an adjustment in the Contract Price or Contract Times. If the OWNER and CONTRACTOR are unable to agree on entitlement to or on the amount or extent, if any, of any such adjustment, a Claim may be made therefore as provide in Article 10.

J. TAXES:

6.10. The CONTRACTOR will pay all sales, consumer, use and other similar taxes required to be paid by the CONTRACTOR in accordance with the Laws and Regulations of the place of the Project which are applicable during the performance of the WORK.

K. USE OF WORK SITE AND OTHER AREAS:

6.11.1. Limitations on the Use of the Work Site and Other Areas:

a. The CONTRACTOR shall confine construction equipment, the storage of materials and equipment, and the operations of workers to the Work site and other areas identified in and permitted by the Contract Documents and as permitted by Laws and Regulations, and shall not unreasonably encumber the Work site and other areas with construction equipment or other materials or equipment. The CONTRACTOR shall assume full responsibility for any damage to any such land or area, or to the owner or occupant thereof, or of any adjacent land or areas, resulting from the performance of the Work.

b. Should any claim be made by any such owner or occupant because of the performance of the Work, the CONTRACTOR shall promptly settle with such other party by negotiation or otherwise resolve the claim by arbitration or other dispute resolution proceeding or at law.

c. The CONTRACTOR shall, to the fullest extent permitted by Laws and Regulations, indemnify and hold harmless the OWNER, ENGINEER, ENGINEER's Consultant and anyone directly or indirectly employed by any of them from and against all

claims, costs, losses and damages (including but not limited to all fees and charges of engineers, attorneys, and other professionals and all court or arbitration or other dispute resolution costs) arising out of or relating to any claim or action, legal or equitable, brought by any such owner or occupant against the OWNER, ENGINEER or any other party indemnified hereunder to the extent caused by or based upon the CONTRACTOR's performance of the Work.

6.11.2. Removal of Debris During Performance of the Work.

a. During the progress of the Work, the CONTRACTOR shall keep the Work site and other areas free from accumulations of waste materials, rubbish and other debris. Removal and disposal of such waste materials, rubbish, and other debris shall conform to applicable Laws and Regulations.

b. Cleaning: Prior to Substantial Completion of the Work, the CONTRACTOR shall clean the Work site and other areas and make it ready for utilization by the OWNER. At the completion of the Work, the CONTRACTOR shall remove from the Work site and other areas all waste materials, rubbish and debris as well as all tools, appliances, construction equipment, and machinery, and surplus materials; and shall restore to original condition all property not designated for alteration by the Contract Documents.

6.11.3. The CONTRACTOR shall not load nor permit any part of any structure to be loaded in any manner that will endanger the structure, nor shall the CONTRACTOR subject any part of the Work or adjacent property to stresses or pressures that will endanger it.

L. RECORD DOCUMENTS:

6.12. The CONTRACTOR shall maintain in a safe place at the Work site one record copy of all Drawings, Specifications, Addenda, Written Amendments, Change Orders, Work Change Directives, Field Orders and written interpretations and clarifications (issued pursuant to Article 9) in good order and annotated to show all changes made during construction. These record documents, together with all approved samples and a counterpart of all approved Shop Drawings, will be available to the ENGINEER for reference. Upon completion of the Work, these record documents, samples and Shop Drawings will be delivered to the ENGINEER for the OWNER.

M. SAFETY AND PROTECTION:

6.13.1. The CONTRACTOR shall be responsible for initiating, maintaining and supervising all safety precautions and

programs in connection with the Work. The CONTRACTOR shall take all necessary precautions for the safety of, and shall provide the necessary protection to prevent damage, injury or loss to:

a. all persons on the Work site or who may be affected by the Work;

b. all the Work and materials and equipment to be incorporated therein, whether in storage on or off the site; and

c. other property at the site or adjacent thereto, including trees, shrubs, lawns, walks, pavements, roadways, structures, utilities and underground facilities not designated for removal, relocation or replacement in the course of construction.

6.13.2. The CONTRACTOR shall comply with all applicable Laws and Regulations of any public body having jurisdiction for the safety of persons or property, or to protect ion of persons or property from damage, injury or loss; and shall erect and maintain all necessary safeguards for such safety and protection. The CONTRACTOR shall notify owners of adjacent property and of underground facilities and utility owners where prosecution of the Work may affect them, and shall cooperate with them in the

protection, removal, relocation and replacement of their property.

6.13.3. All damage, injury or loss to any property referred to in this paragraph M caused, directly or indirectly, in whole or in part, by the CONTRACTOR, any Subcontractor, Supplier or any other person or organization directly or indirectly employed by any of them to perform or furnish any of the Work or anyone for whose acts any of them may be liable, shall be remedied by the CONTRACTOR (except damage or loss attributable to the fault of the Drawings or Specifications or the acts or omissions of the OWNER or ENGINEER or ENGINEER's Consultant or anyone employed by any of them or anyone for whose acts either of them may be liable, and not attributable, directly or indirectly, in whole or in part, to the fault or negligence of the CONTRACTOR or any Subcontractor, Supplier or other person or organization directly or indirectly employed by any of them).

6.13.4. The CONTRACTOR's duties and responsibilities for the safety and protection of the Work shall continue until such time as all the Work is completed and the ENGINEER has issued a notice to the OWNER and CONTRACTOR in accordance with Article 14 that the Work is acceptable (except as otherwise expressly provided in connection with Substantial Completion).

N. SAFETY REPRESENTATIVE:

6.14. The CONTRACTOR shall designate a qualified and experienced safety representative at the Work site whose duties and responsibilities shall be the prevention of accidents and the maintaining and supervising of safety precautions and programs.

O. HAZARD COMMUNICATION PROGRAMS:

6.15. The CONTRACTOR shall be responsible for coordinating any exchange of material safety data sheets or other hazard communication information required to be made available to or exchanged between or among employers at the Work site in accordance with Laws and Regulations.

P. EMERGENCIES:

6.16. In emergencies affecting the safety or protection of persons or the Work or property at the Work site or adjacent thereto, the CONTRACTOR, without special instruction or authorization from the ENGINEER or OWNER, is obliged to act to prevent threatened damage, injury or loss. The CONTRACTOR shall give the ENGINEER prompt written notice if the CONTRACTOR believes that any significant changes in the Work or variations from the Contract Documents have been caused thereby or are required as a result thereof. If the ENGINEER determines that a change in the Contract Documents is required because of the action taken by the CONTRACTOR in response to an emergency, a Work Change Directive or Change Order will be issued to document the consequences of such action.

Q. SHOP DRAWINGS AND SAMPLES:

6.17.1 The CONTRACTOR shall submit Shop Drawings and samples to the ENGINEER for review and acceptance in accordance with the accepted schedule of Shop Drawings and Sample submittals (as required in Article 2). Each submittal will be identified as the ENGINEER may require.

a. Shop Drawings.
(1) Submit number of copies specified in the General Requirements.
(2) Data shown on Shop Drawings will be complete with respect to quantities, dimensions, specified performance and design criteria, materials and similar data to show the ENGINEER the services, materials and equipment the CONTRACTOR proposes to provide and to enable the ENGINEER to review the information for the limited purposes required by Article 6.

b. Samples. The CONTRACTOR shall also submit Samples to the ENGINEER for review and acceptance in accordance with the accepted schedule of Shop Drawings and Sample submittals.
(1) Submit number of Samples as specified in the Specifications.
(2) Clearly identified each sample as to material, Supplier, pertinent data such as catalog numbers and the use for which intended and other data as the ENGINEER may require to enable the ENGINEER to review the submittal for the limited purposes required by Article 6.

6.17.2. Where a Shop Drawing or Sample is required by the CONTRACT DOCUMENTS or the Schedule or Submittals, any related Work performed prior to the ENGINEER's review and acceptance of the pertinent submittal will be at the sole expense and responsibility of the CONTRACTOR.

6.17.3. Submittal Procedures:

a. Before submitting each Shop Drawing or Sample, the CONTRACTOR shall have determined and verified:
(1) all field measurements, quantities, dimensions, specified performance criteria, installation requirements, materials, catalog numbers and similar information with respect thereto;
(2) the suitability of all materials with respect to intended use, fabrication, shipping, handling, storage, assembly and installation pertaining to the performance of the Work;

(3) all information relative to the CONTRACTOR's sole responsibilities in respect of means, methods, techniques, sequences and procedures of construction and safety precautions and programs incident thereto; and

(4) shall also have reviewed and coordinated each Shop Drawing or Sample with other Shop Drawings and Samples and with the requirements of the Work and the Contract Documents.

b. Each submittal will bear a stamp or specific written indication that the CONTRACTOR has satisfied the CONTRACTOR's obligations under the Contract Documents with respect to the CONTRACTOR's review and approval of that submittal.

c. With each submission, the CONTRACTOR shall give the ENGINEER specific written notice of such variations, if any, that the Shop Drawings or Samples submitted may have from the requirements of the Contract Documents. This notice shall be both a written communication separate from the Shop Drawing's or Sample submittal; and, in addition, by a specific notation made on each Shop Drawing and Sample submitted to the ENGINEER for review and acceptance of each such variation.

6.17.4. ENGINEER's REVIEW.

a. The ENGINEER will provide timely review of Shop Drawings and Samples in accordance with the schedule of Shop Drawings and Sample submittals accepted by the ENGINEER. The ENGINEER's review and acceptance will be only to determine if the items covered by the submittals will, after installation or incorporation in the Work, conform to the information given in the Contract Documents and be compatible with the design concept of the completed Project as a functioning whole as indicated by the Contract Documents.

b. The ENGINEER's review and acceptance will not extend to means, methods, techniques, sequences or procedures of constructions (except where a particular means, method, technique, sequence or procedure of construction is specifically and expressly called for by the Contract Documents) or to safety precautions or programs incident thereto. The review and acceptance of a separate item as such will not indicate acceptance of the assembly in which the item functions. The CONTRACTOR shall make corrections required by the ENGINEER, and shall return the required number of corrected copies of Shop Drawings and submit as required new Samples for review and acceptance. The CONTRACTOR shall direct specific attention in writing to revisions other than the corrections called for by the ENGINEER on previous submittals.

c. The ENGINEER's review and acceptance of Shop Drawings or Samples shall not relieve the CONTRACTOR from responsibility for any variation from the requirements of the Contract Documents unless the CONTRACTOR has complied with the requirements of applicable portions of Article 6 and in writing called the ENGINEER's attention to each such variation at the time of submission; and the ENGINEER has given written acceptance of each such variation by a specific written notation thereof incorporated in or accompanying the Shop Drawings or Sample acceptance; nor will any acceptance by the ENGINEER relieve the CONTRACTOR from responsibility for complying with the requirements of applicable portions of Article 6.

d. Where a Shop Drawing or Sample is required by the Contract Documents, any related Work performed prior to the ENGINEERS's review and acceptance of the pertinent submittal will be at the sole expense and responsibility of the CONTRACTOR.

6.17.5. Resubmittal Procedures.

a. The CONTRACTOR shall make corrections required by the ENGINEER and shall return the required number of corrected copies of the Shop Drawings and submit, as required, new Samples for review and acceptance. The CONTRACTOR shall direct specific attention in writing to revisions other than the corrections called for by the ENGINEER on previous submittals.

R. CONTINUING THE WORK:

6.18. The CONTRACTOR shall carry on the Work and adhere to the progress schedule during all disputes or disagreements with the OWNER. No Work shall be delayed or postponed pending resolution of any disputes or disagreements, except as permitted by Article 15 or as the CONTRACTOR and OWNER may otherwise agree in writing.

S. CONTRACTOR'S GENERAL WARRANTY AND GUARANTEE:

6.19.1. The CONTRACTOR warrants and guarantees to the OWNER, ENGINEER and ENGINEER's Consultants that all Work will be in accordance with the Contract Documents and will not be defective. The ENGINEER and its related entities shall be entitled to rely on representation of the CONTRACTOR's warranty and guarantee.

6.19.2. The CONTRACTOR's warranty and guarantee hereunder excludes defects or damage caused by:

a. abuse, modification or improper maintenance or operation by persons other than the CONTRACTOR, Subcontractors, Suppliers, or other individual or entity for whom the CONTRACTOR is responsible; or
b. normal wear and tear under normal usage.

6.19.3. The CONTRACTOR's obligation to perform and complete the Work in accordance with the Contract Documents shall be absolute. None of the following will constitute an acceptance of the Work that is not in accordance with the Contract Documents or a release of the CONTRACTOR's obligation to perform the Work in accordance with the Contract Documents:

a. observations by the ENGINEER;

b. recommendation by the ENGINEER or payment by the OWNER of any progress or final payment;

c. issuance of a certificate of Substantial Completion by the ENGINEER or any payment related thereto by the OWNER;

d. use or occupancy of the Work or any part thereof by the OWNER;

e. any review and acceptance of a Shop Drawing or Sample submittal or the issuance of a notice of acceptability by the ENGINEER;

f. any inspection, test of approval by others; or
g. any correction of defective Work by the OWNER.

T. INDEMNIFICATION:

6.20.1. To the fullest extent permitted by Laws and Regulations, the CONTRACTOR shall indemnify and hold harmless the OWNER, ENGINEER, and ENGINEER's Consultants and the officers, directors, employees, agents and other consultants of each and any of them from and against all claims, costs, losses, and damages (including but not limited to fees and charges of engineers, architects, attorneys and other professionals and all court and arbitration or other dispute resolution costs) arising out of or relating to the performance of the Work, provided that any such claim, cost, loss or damage is attributable to bodily injury, sickness, disease or death, or to injury to or destruction of tangible property (other than the Work itself), including the loss of use resulting there from, but only to the extent caused by any negligent act or omission of the CONTRACTOR, any subcontractor, any Supplier, any person or organization directly or indirectly employed by any of them to perform any of the Work or anyone for whose acts any of them may be liable.

6.20.2. In any and all claims against the OWNER or ENGINEER or any of their respective consultants, agents, officers, directors or employees by any employee (or the survivor or personal representative of such employee) of the CONTRACTOR, any subcontractor, any Supplier, any person or organization directly or indirectly employed by any of them to perform any of the Work, or anyone for whose acts any of them may be liable, the indemnification obligation under applicable portions of Article paragraph 6 shall not be limited in any way by any limitation on the amount or type of damages, compensation or benefits payable by or for the CONTRACTOR or any such subcontractor, Supplier or other person or organization under the workers' compensation acts, disability benefit acts or other employee benefit acts.

6.20.3. The indemnification obligations of the CONTRACTOR under applicable portions of Article 6 shall not extend to the liability of the ENGINEER and ENGINEER's consultants, officers, directors, employees, agents, consultants and subcontractors arising out of:

a. the preparation or approval of, or the failure to prepare or approve, maps, Drawings, opinions, reports, surveys, Change Orders, designs, or Specifications; or

b. giving directions or instructions, or failing to give them, if that is the primary cause of the injury or damage.

U. DELEGATION OF PROFESSIONAL DESIGN SERVICES

6.21.1. The CONTRACTOR will not be required to provide professional design services unless such services are specifically required by the CONTRACT DOCUMENTS for a portion of the Work or unless such services are required to carry out the CONTRACTOR's responsibilities for construction means, methods, techniques, sequences and procedures. The CONTRACTOR shall not be required to provide professional services in violation of applicable law.

6.21.2.. If professional design services or certifications by a design professional related to systems, materials or equipment are specifically required of the CONTRACTOR by the CONTRACT DOCUMENTS, the OWNER and ENGINEER will specify all performance and design criteria that such services must satisfy. The CONTRACTOR shall cause such services or certifications to be provided by a properly licensed professional, whose signature and seal shall appear on all drawings, calculations, specifications, certifications, Shop Drawings and other submittals prepared by such professional. Shop Drawings and other submittals related to the Work designed or certified by such professional, if prepared by others, shall bear such professional's written approval when submitted to the ENGINEER.

6.21.3. The OWNER and ENGINEER shall be entitled to rely upon the adequacy, accuracy and completeness of the services, certifications or approvals performed by such design professionals, provided the OWNER and ENGINEER have specified to the CONTRACTOR all performance and design criteria that such services must satisfy.

6.21.4. Pursuant to this Paragraph 6.21, the ENGINEER's review and acceptance of design calculations and design drawings will be only for the limited purpose of checking for conformance with performance and design criteria given and the design concept expressed in the CONTRACT DOCUMENTS. The ENGINEER's review and acceptance of Shop Drawings and other submittals (except design calculations and design drawings) will be only for the purpose stated in Paragraph 6.17.

6.21.5. The CONTRACTOR shall not be responsible for the adequacy of the performance or design criteria required by the CONTRACT DOCUMENTS.

ARTICLE 7 --- OTHER WORK

A. RELATED WORK AT SITE:

7.01.1 The OWNER may perform other work related to the Project at the Site by the OWNER's own forces, or via other direct contracts therefore which shall contain General Conditions similar to these, or have other work performed by utility owners. If the fact that such other work is to be performed was not noted in the Contract Documents, then:

a. written notice thereof will be given to the CONTRACTOR prior to starting any such other work; and

b. if the OWNER and CONTRACTOR are unable to agree on entitlement to or on the amount or extent, if any, of any adjustment in the Contract Price or Contract Times that should be allowed as a result of such other work, a Claim may be made therefore as provided in Articles 10.

7.01.2. The CONTRACTOR shall afford each other contractor who is a party to such a direct contract, each utility owner and the OWNER, if the OWNER is performing other work with the OWNER's employees, proper and safe access to the Work site, and a reasonable opportunity for the introduction and storage of materials and equipment and the execution of such work, and shall properly coordinate the Work with theirs. Unless otherwise provided in the Contractor Documents, the CONTRACTOR shall do all cutting, fitting and patching of the Work that may be required to properly connect or otherwise make its several parts come together and properly integrate with such other work. The CONTRACTOR shall not endanger any work of others by cutting, excavating or otherwise altering their work and will only cut or alter their work with the written consent of the ENGINEER and the others whose work will be affected. The duties and responsibilities of the CONTRACTOR under this paragraph are for the benefit of such utility owners and other contractors to the extend that there are comparable provisions for the benefit of the CONTRACTOR in said direct contracts between the OWNER and such utility owners and other contractors.

7.01.3. If the proper execution or results of any part of the CONTRACTOR's Work depends upon work performed by others under this Article 7, the CONTRACTOR shall inspect such other work and promptly report to the ENGINEER in writing any delays, defects or deficiencies in such other work that render it unavailable or unsuitable for the proper execution and results of the CONTRACTOR's Work. The CONTRACTORS's failure so to report will constitute an acceptances of such other work as fit and proper for integration with the CONTRACTOR's Work, except for latent or non-apparent defects and deficiencies in such other work.

B. COORDINATION:

7.02.1. If the OWNER intends to contract with others for the performance of other work on the Project at the site, the following will be set forth in the Supplemental General Conditions:

a. the individual or entity who will have authority and responsibility for coordination of the activities among the various prime contractors will be identified;

b. the specific matters to be covered by such authority and responsibility will be itemized; and

c. the extent of such authority and responsibilities will be provided.

7.02.2. Unless otherwise provided in the Supplemental General Conditions, the OWNER shall have sole authority and

responsibility in respect of such coordination.

C. LEGAL RELATIONSHIPS.

7.03.1. Paragraphs 7.A and 7.B are not applicable for utilities not under the control of the OWNER.

7.03.2. Each other direct contract of the OWNER under Paragraph 7.A shall provide that the other contractor is liable to the OWNER and the CONTRACTOR for the reasonable direct delay and disruption cost incurred by the CONTRACTOR as a result of the other contractor's actions or inactions.

7.03.3. The CONTRACTOR shall be liable to the OWNER and any other contractor for the reasonable direct delay and disruption costs incurred by such other contractor as a result of the CONTRACTOR's action or inaction.

ARTICLE 8 — OWNER'S RESPONSIBILITIES.

A. COMMUNICATIONS TO CONTRACTOR

8.01. Except as otherwise provided in these General Conditions, the OWNER shall issue all communications to the CONTRACTOR through the ENGINEER.

B. REPLACEMENT OF ENGINEER

8.02. In case of termination of the employment of the ENGINEER, the OWNER shall appoint an engineer to whom the CONTRACTOR makes no reasonable objection, whose status under the Contract Documents shall be that of the former ENGINEER.

C. FURNISH DATA

8.03. The OWNER shall promptly furnish the data required of the OWNER under the Contract Documents.

D. PAY WHEN DUE

8.04. The OWNER shall make payments to the CONTRACTOR when they are due as provided in Article 14.

E. LANDS AND EASEMENTS; REPORTS AND TESTS

8.05. The OWNER's duties in respect of providing lands and easements and providing engineering surveys to establish reference points are set forth in applicable portions of Article 4. Article 4 refers to the OWNER's identifying and making available to the CONTRACTOR copies of reports of explorations and tests of subsurface conditions at the site and drawings of physical conditions in or relating to existing surface or subsurface structures at or contiguous to the Work site that have been utilized by the ENGINEER in preparing the Contract Documents.

F. INSURANCE

8.06. The OWNER's responsibilities, if any, in respect to purchasing and maintaining liability and property insurance are set forth in Article 5.

G. CHANGE ORDERS

8.07. The OWNER is obligated to execute Change Orders as indicated in Article 10.

H. INSPECTIONS, TESTS, AND APPROVALS

8.08. The OWNER's responsibility in respect of certain inspections, tests and approvals is set forth in Article 13.

I. LIMITATIONS ON OWNER'S RESPONSIBILITIES

8.09 The OWNER shall not supervise, direct or have control or authority over, nor be responsible for, the CONTRACTOR's means, methods, techniques, sequences or procedures of construction or the safety precautions and programs incident thereto, or for any failure of the CONTRACTOR to comply with Laws and Regulations applicable to the furnishing or performance of the Work. The OWNER will not be responsible for the CONTRACTOR's failure to perform or furnish the Work in accordance with the Contract Documents.

J. UNDISCLOSED HAZARDOUS ENVIRONMENTAL CONDITION

8.10. The OWNER's responsibility in respect of undisclosed Hazardous Environmental Condition is set forth is Article 4.

K. EVIDENCE OF FINANCIAL ARRANGEMENTS

8.11. If and to the extent the OWNER has agreed to furnish the CONTRACTOR reasonable evidence that financial arrangements have been made to satisfy the OWNER's obligations under the Contract Documents, the OWNER's responsibility in respect thereof will be as set forth in the Supplemental General Conditions.

ARTICLE 9 — ENGINEER'S STATUS DURING CONSTRUCTION.

A. OWNER'S REPRESENTATIVE:

9.01. The ENGINEER will be the OWNER's representative during the construction period. The duties and responsibilities and the limitations of authority of the ENGINEER, as the OWNER's representative during construction, are set forth in the Contract Documents and will not be changed without written consent of the OWNER and the ENGINEER.

B. VISITS TO SITE:

9.02.1. The ENGINEER will make visits to the Work site at intervals appropriate to the various stages of construction as the ENGINEER deems necessary in order to observe as an experienced and qualified design professional the progress that has been made and the quality of the various aspects of the CONTRACTOR's executed Work. Based on information obtained during such visits and observations, the ENGINEER, for the benefit of the OWNER, will determine, in general, if the Work is proceeding in accordance with the Contract Documents. The ENGINEER will not be required to make exhaustive or continuous inspections on the Work site to check the quality or quantity of the Work. The ENGINEER's efforts will be directed toward providing for the OWNER a greater degree of confidence that the completed Work will conform generally to the Contract Documents. On the basis of such visits and on-site observations, the ENGINEER will keep the OWNER informed of the progress of the Work and will endeavor to guard the OWNER against defective Work.

9.02.2. The ENGINEER's visits and on-site observations are subject to all the limitations on the ENGINEER's authority and responsibility set forth in paragraph 9.B.09. Particularly, but without limitation, during or as a result of the ENGINEER's on-site visits or observations of the CONTRACTOR's Work, the ENGINEER will not supervise, direct, control or have authority over or be responsible for the CONTRACTOR's means, methods, techniques, sequences or procedures of construction, or the safety precautions and programs incident thereto, or for any failure of the CONTRACTOR to comply with Laws and Regulations applicable to the furnishing or performance of the Work.

C. PROJECT REPRESENTATION:

9.03. If the OWNER and ENGINEER agree, the ENGINEER will furnish a Resident Project Representative to assist the ENGINEER in providing more continuous observation of the Work. The authority and responsibilities of any such Resident Project Representative and assistants will be as provided in the Supplemental General Conditions, and limitations on the responsibilities thereof will be as provided in Paragraph 9.B.09. If the OWNER designates another representative or agent to represent the OWNER at the Work site who is not the ENGINEER's Consultant, agent or employee, the responsibilities and limitations thereon of such other individual or entity will be as provided in the Supplemental General Conditions.

D. AUTHORIZED VARIATIONS IN WORK:

9.04. The ENGINEER may authorize minor variations in the Work from the requirements of the Contract Documents which do not involve an adjustment in the Contract Price or the Contract Time and are compatible with the design concept of the completed Project as a functioning whole as indicated by the Contract Documents. These may be accomplished by a Field Order and will be binding on the OWNER and also on the CONTRACTOR who shall perform the Work involved promptly. If the OWNER or the CONTRACTOR believes that a Field Order justifies an adjustment in the Contract Price or Contract Time, or both, and the parties

are unable to agree on entitlement to or on the amount or extent, if any, of such adjustment, the OWNER or CONTRACTOR may make a Claim therefore as provided in Article 10.

E. REJECTING DEFECTIVE WORK:

9.05. The ENGINEER will have authority to disapprove or reject Work which the ENGINEER believes to be defective, or that the ENGINEER believes will not produce a completed Project that conforms to the Contract Documents or that will prejudice the integrity of the design concept of the completed Project as a functioning whole as indicated by the Contract Documents. The ENGINEER will also have authority to require special inspection or testing of the Work as provided in Article 13, whether or not the Work is fabricated, installed or completed.

F. SHOP DRAWINGS, CHANGE ORDERS AND PAYMENTS:

9.06.1. In connection with the ENGINEER's authority, and limitations thereof, as to Shop Drawings and Samples, see Article 6.

9.06.2. In connection with the ENGINEER's authority, and limitations thereof, as to design calculations and design drawings submitted in response to a delegation of professional design services, if any, see applicable paragraphs of Article 6.

9.06.3.. In connection with the ENGINEER's authority as to Change Orders, see Articles 10, 11 and 12.

9.06.4. In connection with the ENGINEER's authority as to Applications for Payment, see Article 14.

G. DETERMINATIONS FOR UNIT PRICE WORK:

9.07. The ENGINEER will determine the actual quantities and classifications of Unit Price Work performed by the CONTRACTOR. The ENGINEER will review with the CONTRACTOR the ENGINEER's preliminary determinations on such matters before rendering a written decision thereon (by recommendation of an Application for Payment or otherwise). The ENGINEER's written decisions thereon will be final and binding (except as modified by the ENGINEER to reflect changed factual conditions or more accurate data) upon the OWNER and CONTRACTOR, subject to the provisions of Article 10.

H. DECISIONS ON REQUIREMENTS OF CONTRACT DOCUMENTS AND ACCEPTABILITY OF WORK:

9.08.1. The ENGINEER will be the initial interpreter of the requirements of the Contract Documents and judge of the acceptability of the Work there under. All matters in question and other matters between the OWNER and CONTRACTOR arising prior to the date of final payment is due relating to the acceptability of the Work, and the interpretation of the requirements of the CONTRACT DOCUMENTS pertaining to the performance of the Work, will be referred initially to the ENGINEER in writing within 30 days of the event giving rise to the question.

9.08.2. The ENGINEER will, with reasonable promptness, render a written decision on the issue referred. If the OWNER or CONTRACTOR believe that any such decision entitles them to an adjustment in the Contract Price or Contract Time, or both, a Claim may be made under the applicable portion of Article 10. The date of the ENGINEER's decision shall be the date of the event giving rise to the issues referenced for the purposes of Article 10.

9.08.3 The ENGINEER's written decision on the issue referred will be final and binding upon the OWNER and CONTRACTOR, subject to the provisions of Article 10.

9.08.4. When functioning as interpreter and judge under this paragraphs 9.08, the ENGINEER will not show partiality to the OWNER or CONTRACTOR and will not be liable in connection with any interpretation or decision rendered in good faith in such capacity.

I. LIMITATIONS ON ENGINEER'S AUTHORITY AND RESPONSIBILITIES:

9.09.1. Neither the ENGINEER's authority or responsibility under this Article 9 or under any other provision of the Contract Documents nor any decision made by the ENGINEER in good faith either to exercise or not exercise such authority or responsibility or the undertaking, exercise or performance of any authority or responsibility of the ENGINEER shall create, impose or give rise to any duty owed by the ENGINEER to the CONTRACTOR, any Subcontractor, any Supplier, any other individual or entity, or to any surety for or employee or agent of any of them.

9.09.2. The ENGINEER will not supervise, direct, control or have authority over or be responsible for the CONTRACTOR's means, methods, techniques, sequences or procedures of construction, or the safety precautions and programs incident thereto, or for any failure of the CONTRACTOR to comply with Laws and Regulations applicable to the furnishing or performance of the Work. The ENGINEER will not be responsible for the CONTRACTOR's failure to perform or furnish the Work in accordance with the Contract Documents.

9.09.3. The ENGINEER will not be responsible for the acts or omissions of the CONTRACTOR or of any Subcontractor, any Supplier, or of any other individual or entity performing or furnishing any of the Work.

9.09.4. The ENGINEER's review of the final Application for Payment any accompanying documentation and all maintenance and operation instructions, schedules , guarantees, bonds and certificates of inspection, tests and approvals and other documentation required to be delivered by Article 14 will only be to determine generally that their content complies with the requirements of, and in the case of certificates of inspections, tests and approvals that the results certified indicate compliance with, the Contract Documents.

9.09.5. The limitations upon authority and responsibility set forth in this paragraph 9.09 shall also apply to the ENGINEER's Consultants, Resident Project Representative, and assistants, if any.

ARTICLE 10 --- CHANGES IN THE WORK; CLAIMS

A. AUTHORIZED CHANGES IN THE WORK

10.01.1. Without invalidating the Contract and without notice to any surety, the OWNER may, at any time or from time to time, order additions, deletions or revisions in the Work by a Change Order, or a Work Change Directive. Upon receipt of any such document, the CONTRACTOR shall promptly proceed with the Work involved which will be performed under the applicable conditions of the Contract Documents (except as otherwise specifically provided).

10.01.2. If the OWNER and CONTRACTOR are unable to agree on entitlement to, or on the amount or extent, if any, of an adjustment in the Contract Price or Contract Times, or both, that should be allowed as a result of Work Change Directive, a claim may be made therefore as provided in this Article 10.

B. UNAUTHORIZED CHANGES IN THE WORK

10.02. The CONTRACTOR shall not be entitled to an increase in the Contract Price or an extension of the Contract Times with respect to any Work performed that is not required by the Contract Documents as amended, modified and supplemented as provided in Article 3, except in the case of an emergency as provided in Article 6 or in the case of uncovering Work as provided in Article 13.

C. EXECUTION OF CHANGE ORDERS

10.03.1. The OWNER and CONTRACTOR shall execute appropriate Change Orders recommended by the ENGINEER covering:

a. changes in the Work, which are: (i) ordered by the OWNER pursuant to paragraph 10.A; (ii) required because of acceptance of defective Work under Article 13 or the OWNER's correcting defective Work under Article 13; or (iii) agreed to by the parties;

b. changes in the Contract Price or Contract Times which are agreed to by the parties, including any undisputed sum or amount of time for Work actually performed in accordance with a Work Change Directive; and

c. changes in the Contract Price or Contract Times which embody the substance of any written decision rendered by the ENGINEER pursuant to applicable portion of Paragraph 10.E; provided that, in lieu of executing any such Change Order, an appeal may be taken from any such decision in accordance with the provisions of the Contract Documents and applicable Laws and Regulations, but during any such appeal, the CONTRACTOR shall carry on the Work and adhere to the Progress Schedule as provided in Article 6.

D. NOTIFICATION TO SURETY

10.04. If notice of any change affecting the general scope of the Work or the provisions of the Contract Documents (including,

but not limited to, Contract Price or Contract Times) is required by the provisions of any Bond to be given to a surety, the giving of any such notice will be the CONTRACTOR's responsibility. The amount of each applicable Bond will be adjusted to reflect the effect of any such change.

E. CLAIMS

10.05.1. ENGINEER's Decision Required: All Claims, except those waived pursuant to Article 14, shall be referred to the ENGINEER for decision. A decision by the ENGINEER shall be required as a condition precedent to any exercise by OWNER or CONTRACTOR of any rights or remedies either may otherwise have under the Contract Documents or by Laws and Regulations in respect of such Claims.

10.05.2. Notice: Written notice stating the general nature of each Claim, shall be delivered by the claimant to the ENGINEER and the other party to the Contract promptly (but in no event later than 30 days) after the start of the event giving rise thereto. The responsibility to substantiate a Claim shall rest with the party making the Claim. Notice of the amount or extent of the Claim, with supporting data shall be delivered to the ENGINEER and the other party to the Contract within 60 days after the start of such event (unless the ENGINEER allows additional time for claimant to submit additional or more accurate data in support of such Claim). A Claim for an adjustment in Contract Price shall be prepared in accordance with the provisions of Article 12. A Claim for an adjustment in Contract Time shall be prepared in accordance with the provisions of Article 12. Each Claim shall be accompanied by the claimant's written statement that the adjustment claimed is the entire adjustment to which the claimant believes it is entitled as a result of said event. The opposing party shall submit any response to the ENGINEER and the claimant within 30 days after receipt of the claimant's last submittal (unless the ENGINEER allows additional time).

10.05.3. ENGINNEER'S Action: The ENGINEER will review each Claim and, within 30 days after receipt of the last submittal of the claimant or the last submittal of the opposing party, if any, take one of the following actions in writing:

a. deny the Claim in whole or in part,

b. approve the Claim, or

c. notify the parties that the ENGINEER is unable to resolve the Claim if, in the ENGINEER's sole discretion, it would be inappropriate for the ENGINEER to do so. For purposes of further resolution of the Claim, such notice shall be deemed a denial.

10.05.3. In the event that ENGINEER does not take action on a Claim within said 30 days, the Claim shall be deemed denied.

10.05.4. The ENGINEER's written actions or denial pursuant to this Paragraph 10.05 will be final and binding upon the OWNER and CONTRACTOR, unless the OWNER or CONTRACTOR invoke the dispute resolution procedure set forth in Article 16 within 30 days of such action or denial.

10.05.5 No Claim for an adjustment in Contract Price or Contract Times will be valid if not submitted in accordance with this Paragraph 10.05.

ARTICLE 11 --- COST OF THE WORK; ALLOWANCES; UNIT PRICE WORK

A. COST OF THE WORK

11.01.1 Costs Included: The term Cost of the Work means the sum of all costs, except those excluded in Paragraph 11.01.2, necessarily incurred and paid by the CONTRACTOR in the proper performance of the Work. When the value of any Work covered by a Change Order or when a Claim for an adjustment in Contract Price is determined on the basis of Cost of the Work, the costs to be reimbursed to the CONTRACTOR will be only those additional or incremental costs required because of the change in the Work or because of the event giving rise to the Claim. Except as otherwise may be agreed to in writing by the OWNER, such costs shall be in amounts no higher than those prevailing in the locality of the Project, shall include only the following items, and shall not include any of the costs itemized in Paragraph 11.01.2.

a. Payroll costs for employees in the direct employ of the CONTRACTOR in the performance of the Work under schedules of job classifications agreed upon by the OWNER and CONTRACTOR. Such employees shall include, without limitation, superintendents, foremen, and other personnel employed full time at the Work Site. Payroll costs for employees not employed full time on the Work shall be apportioned on the basis of their time spent on the Work. Payroll costs shall include, but not be limited to, salaries and wages plus the cost of fringe benefits, which shall include social security contributions, unemployment, excise, and payroll taxes, workers' compensation, health and retirement benefits, bonuses, sick leave, vacation and holiday pay applicable

thereto. The expenses of performing Work outside of regular working hours, on Saturday, Sunday, or legal holidays, shall be included in the above to the extent authorized by the OWNER.

b. Cost of all materials and equipment furnished and incorporated in the Work, including costs of transportation and storage thereof, and Suppliers' field services required in connection therewith. All cash discounts shall accrue to the CONTRACTOR unless the OWNER deposits funds with the CONTRACTOR with which to make payments, in which case the cash discounts shall accrue to the OWNER. All trade discounts, rebates and refunds and returns from sale of surplus materials and equipment shall accrue to Owner, and Contractor shall make provisions so that they may be obtained.

c. Payments made by the CONTRACTOR to Subcontractors for Work performed by Subcontractors. If required by the OWNER, the CONTRACTOR shall obtain competitive bids from subcontractors acceptable to the OWNER and CONTRACTOR and shall deliver such bids to the OWNER, who will then determine, with the advice of the ENGINEER, which bids, if any, will be acceptable. If any subcontract provides that the Subcontractor is to be paid on the basis of Cost of the Work plus a fee, the Subcontractor's Cost of the Work and fee shall be determined in the same manner as Contractor's Cost of the Work and fee as provided in this Article 11.

d. Costs of special consultants (including but not limited to Engineers, architects, testing laboratories, surveyors, attorneys, and accountants) employed for services specifically related to the Work.

e. Supplemental costs including the following:

(1) The proportion of necessary transportation, travel, and subsistence expenses of Contractor's employees incurred in discharge of duties connected with the Work.

(2) Cost, including transportation and maintenance, of all materials, supplies, equipment, machinery, appliances, office, and temporary facilities at the Work Site, and hand tools not owned by the workers, which are consumed in the performance of the Work, and cost, less market value, of such items used but not consumed which remain the property of the CONTRACTOR.

(3) Rentals of all construction equipment and machinery, and the parts thereof whether rented from the CONTRACTOR or others in accordance with rental agreements approved by the OWNER with the advice of the ENGINEER, and the costs of transportation, loading, unloading, assembly, dismantling, and removal thereof. All such costs shall be in accordance with the terms of said rental agreements. The rental of any such equipment, machinery, or parts shall cease when the use thereof is no longer necessary for the Work.

(4) Sales, consumer, use, and other similar taxes related to the Work, and for which the CONTRACTOR is liable, imposed by Laws and Regulations.

(5) Deposits lost for causes other than negligence of the CONTRACTOR, any Subcontractor, or anyone directly or indirectly employed by any of them or for whose acts any of them may be liable, and royalty payments and fees for permits and licenses.

(6) Losses and damages (and related expenses) caused by damage to the Work, not compensated by insurance or otherwise, sustained by the CONTRACTOR in connection with the performance of the Work (except losses and damages within the deductible amounts of property insurance established in accordance with applicable portions of Article 5), provided such losses and damages have resulted from causes other than the negligence of the CONTRACTOR, any Subcontractor, or anyone directly or indirectly employed by any of them or for whose acts any of them may be liable. Such losses shall include settlements made with the written consent and approval of the OWNER. No such losses, damages, and expenses shall be included in the Cost of the Work for the purpose of determining CONTRACTOR's fee.

(7) The cost of utilities, fuel, and sanitary facilities at the Work Site.

(8) Minor expenses such as telegrams, long distance telephone calls, telephone service at the Work Site, expresses, and similar petty cash items in connection with the Work.

(9) The costs of premiums for all bonds and insurance the CONTRACTOR is required by the CONTRACT DOCUMENTS to purchase and maintain.

11.01.2. Costs Excluded: The term Cost of the Work shall not include any of the following items:

a. Payroll costs and other compensation of the CONTRACTOR's officers, executives, principals (of partnerships and sole proprietorships), general managers, safety managers, engineers, architects, estimators, attorneys, auditors, accountants, purchasing and contracting agents, expediters, timekeepers, clerks, and other personnel employed by the CONTRACTOR, whether at the Work Site or in the CONTRACTOR's principal or branch office for general administration of the Work and not specifically included in the agreed upon schedule of job classifications referred to or specifically covered by applicable portions of Article 11, all of which are to be considered administrative costs covered by the CONTRACTOR's fee.

b. Expenses of the CONTRACTOR's principal and branch offices other than the CONTRACTOR's office at the Work Site.

c. Any part of the CONTRACTOR's capital expenses, including interest on the CONTRACTOR's capital employed for the Work and charges against the CONTRACTOR for delinquent payments.

d. Costs due to the negligence of the CONTRACTOR, any Subcontractor, or anyone directly or indirectly employed by any of them or for whose acts any of them may be liable, including but not limited to, the correction of defective Work, disposal of

materials or equipment wrongly supplied, and making good any damage to property.

e. Other overhead or general expense costs of any kind and the costs of any item not specifically and expressly included in applicable portions of Article 11.

11.01.3. CONTRACTOR's Fee: When all the Work is performed on the basis of cost-plus, the CONTRACTOR's fee shall be determined as set forth in the Agreement. When the value of any Work covered by a Change Order or when a Claim for an adjustment in Contract Price is determined on the basis of Cost of the Work, the CONTRACTOR's fee shall be determined as set forth in applicable portions of Article 12.

11.01.4. Documentation: Whenever the Cost of the Work for any purpose is to be determined pursuant to Paragraphs 11.01.1 and 11.01.2, the CONTRACTOR will establish and maintain records thereof in accordance with generally accepted accounting practices and submit in a form acceptable to the ENGINEER an itemized cost breakdown together with supporting data.

B. ALLOWANCES

11.02.1. It is understood that the CONTRACTOR has included in the Contract Price all allowances so named in the Contract Documents and shall cause the Work so covered to be performed for such sums and by such persons or entities as may be acceptable to the OWNER and ENGINEER.

11.02.2. Cash Allowances

a. The CONTRACTOR agrees that:
(1) the cash allowances include the cost to the CONTRACTOR (less any applicable trade discounts) of materials and equipment required by the allowances to be delivered at the Work Site, and all applicable taxes; and
(2) the CONTRACTOR's costs for unloading and handling on the Work Site, labor, installation , overhead, profit, and other expenses contemplated for the cash allowances have been included in the Contract Price and not in the allowances, and no demand for additional payment on account of any of the foregoing will be valid.

11.02.3. Contingency Allowance

a. The CONTRACTOR agrees that a contingency allowance, if any, is for the sole use of the OWNER to cover unanticipated costs.

11.02.4. Prior to final payment, an appropriate Change Order will be issued as recommended by the ENGINEER to reflect actual amounts due the CONTRACTOR on account of the Work covered by allowances, and the Contract Price shall be correspondingly adjusted.

C. UNIT PRICE WORK

11.03.1. Where the Contract Documents provide that all or part of the Work is to be Unit Price Work, initially the Contract Price will be deemed to include for all Unit Price Work an amount equal to the sum of the unit price for each separately identified item of Unit Price Work times the estimated quantity of each item as indicated in the Agreement.

11.03.2. The estimated quantities of items of Unit Price Work are not guaranteed and are solely for the purpose of comparison of Bids and determining an initial Contract Price. Determinations of the actual quantities and classifications of Unit Price Work performed by the CONTRACTOR will be made by the ENGINEER subject to the provisions of Article 9.

11.03.3. Each unit price will be deemed to include an amount considered by the CONTRACTOR to be adequate to cover the CONTRACTOR's overhead and profit for each separately identified item.

11.03.4. The OWNER or CONTRACTOR may make a Claim for an adjustment in the Contract Price in accordance with applicable portions of Article 10 if:

a. the quantity of any item of Unit Price Work performed by the CONTRACTOR differs materially and significantly from the estimated quantity of such item indicated in the Agreement; and

b. there is no corresponding adjustment with respect any other item of Work; and

c. the CONTRACTOR believes that the CONTRACTOR is entitled to an increase in Contract Price as a result of having incurred additional expense or the OWNER believes that the OWNER is entitled to a decrease in Contract Price and the parties are unable to agree as to the amount of any such increase or decrease.

ARTICLE 12 --- CHANGE OF CONTRACT PRICE

A. CHANGE OF CONTRACT PRICE:

12.01.1. The Contract Price may only be changed by a Change Order. Any claim for an adjustment in the Contract Price shall be based on a written notice submitted by the party making the claim to the ENGINEER and the other party to the Contract in accordance with the provisions of Article 10.

12.01.2. The value of any Work covered by a Change Order or of any claim for an adjustment in the Contract Price will be determined as follows:

a. Where the Work involved is covered by unit prices contained in the Contract Documents, by application of such unit prices to the quantities of the items involved (subject to the provisions of applicable portions of Article11); or

b. Where the Work involved is not covered by unit prices contained in the Contract Documents, by mutually agreed lump sum (which may include an allowance for overhead and profit not necessarily in accordance with Paragraph 12.01.3).

c. Where the Work involved is not covered by unit prices contained in the Contract Documents and agreement to a lump sum is not reached under this paragraph 12.01.2, on the basis of the Cost of the Work (determined as provided in applicable portion of Article 11) plus a CONTRACTOR's fee for overhead and profit (determined as provided in paragraphs 12.01.3).

12.01.3. CONTRACTOR's Fee: The CONTRACTOR's fee for overhead and profit shall be determined as follows:

a. a mutually acceptable fixed fee; or

b. if a fixed fee is not agreed upon, then a fee based on the following percentages of the various portions of the Cost of the Work:

(1) for costs incurred under Paragraphs 11.01.1.a and 11.01.1.b, the CONTRACTOR's fee shall be 15 percent;

(2) for costs incurred under Paragraph 11.01.1.c, the CONTRACTOR's fee shall be five percent;

(3) where one or more tiers of subcontractors are on the basis of Cost of the Work plus a fee and no fixed fee is agreed upon, the intent of Paragraph 12.01.3.b.(1) is that the Subcontractor who actually performs the Work, at whatever tier, will be paid a fee a 15 percent of the costs incurred by such Subcontractor under Paragraph 11.01.1.a and 11.01.1.b and that any higher tier Subcontractor and CONTRACTOR will each be paid a fee of five percent of the amount paid to the next lower tier Subcontractor;

(4) no fee shall be payable on the basis of costs itemized under Paragraphs 11.01.1.d, 11.01.1.e and 11.01.2;

(5) the amount of credit to be allowed by the CONTRACTOR to the OWNER for any change which results in a net decrease in cost will be the amount of the actual net decrease in cost plus a deduction in the CONTRACTOR's fee by an amount equal to five percent of such net decrease; and

(6) when both additions and credits are involved in any one change, the adjustment in the CONTRACTOR's fee shall be computed on the basis of the net change in accordance with Paragraphs 12.01.3.b.(1) through 12.01.3.b.(5), inclusive.

B. CHANGE OF CONTRACT TIMES

12.02.1. The Contract Times may only be changed by a Change Order. Any Claim for an adjustment in the Contract Times shall be based on written notice submitted by the party making the Claim to the ENGINEER and the other party to the Contract in accordance with the provisions of Paragraph 10.E.

12.02.2. Any adjustment of the Contract Times covered by a Change Order or any Claim for an adjustment in the Contract Times will be determined in accordance with the provisions of this Article 12.

C. DELAYS

12.03.1. Where the CONTRACTOR is prevented from completing any part of the Work within the Contract Times due to delay beyond the control of the CONTRACTOR, the Contract Times will be extended in an amount equal to the time lost due to such delay if a claim is made therefore as provided in paragraph 12.02.1. Delays beyond the control of the CONTRACTOR shall include, but not be limited to, acts or neglect by the OWNER, acts or neglect of utility owners or other contractors performing other work as contemplated by Article 7, fires, floods, epidemics, abnormal weather conditions or acts of God.

12.03.2. If the OWNER, ENGINEER, or other contractors or utility owners performing other work for the OWNER as contemplated by Article 7, or anyone for whom the OWNER is responsible, delays, disrupts, or interferes with the performance or progress of the Work, then the CONTRACTOR shall be entitled to an equitable adjustment in the Contract Price or the Contract Times, or both, the CONTRACTOR's entitlement to an adjustment of the Contract Times is conditioned on such adjustment being essential to the CONTRACTOR's ability to complete the Work within the Contract Times.

12.03.3. If the CONTRACTOR is delayed in the performance or progress of the Work by fire, flood, epidemic, abnormal weather conditions, acts of God, acts or failures to act of utility owners not under the control of the OWNER, or other causes not the

fault of and beyond control of the OWNER and CONTRACTOR, then the CONTRACTOR shall be entitled to an equitable adjustment in Contract Times, if such adjustment is essential to the CONTRACTOR's ability to complete the Work within the Contract Times. Such an adjustment shall be the CONTRACTOR's sole and exclusive remedy for the delays described in this paragraph 12.03.3.

12.03.4. The OWNER, ENGINEER and the related entities of each of them shall not be liable to the CONTRACTOR for any claims, costs, losses, or damages (including but not limited to all fees and charges of engineers, attorneys, and other professionals and all court or arbitration or other dispute resolution costs) sustained by the CONTRACTOR on or in connection with any other project or anticipated project.

12.03.5. The CONTRACTOR shall not be entitled to an adjustment in Contract Price or Contract Times for delays within the control of the CONTRACTOR. Delays attributable to and within the control of a Subcontractor or Supplier shall be deemed to be delays within the control of the CONTRACTOR.

ARTICLE 13 --- TESTS AND INSPECTIONS; CORRECTION, REMOVAL OR ACCEPTANCE OF DEFECTIVE WORK

A. NOTICE OF DEFECTS:

13.01. Prompt notice of all defective Work of which the OWNER or ENGINEER have actual knowledge will be given to the CONTRACTOR. All defective Work may be rejected, corrected or accepted as provided in this Article 13.

B. ACCESS TO WORK:

13.02. The OWNER, ENGINEER, ENGINEER's Consultants, other representatives and personnel of the OWNER, independent testing laboratories and governmental agencies with jurisdictional interests will have access to the Work site and the Work at reasonable times for their observation, inspecting and testing. The CONTRACTOR shall provide them proper and safe conditions for such access and advise them of the CONTRACTOR's site safety procedures and programs so that they may comply therewith as applicable.

C. TESTS AND INSPECTIONS:

13.03.1. The CONTRACTOR shall give the ENGINEER timely notice of readiness of the Work for all required inspections, tests or approvals, and shall cooperate with inspection and testing personnel to facilitate required inspections or tests.

13.03.2. The OWNER shall employ and pay for the services of an independent testing laboratory to perform all inspections, tests or approvals required by the Contract Documents except:

a. for inspections, tests or approvals covered by paragraph 13.03.3 and 13.03.4 below;

b. that costs incurred in connection with tests or inspections conducted pursuant to paragraph 13.04.2 shall be paid as provided in said paragraph 13.04.3; and

c. as otherwise specifically provided in the Contract Documents.

13.03.3. If Laws and Regulations of any public body having jurisdiction require any Work (or part thereof) specifically to be inspected, tested or approved by an employee or other representative of such public body, the CONTRACTOR shall assume full responsibility for arranging and obtaining such inspections, tests or approvals, pay all costs in connection therewith, and furnish the ENGINEER the required certificates of inspection, or approval.

13.03.4. The CONTRACTOR shall be responsible for arranging and obtaining and shall pay all costs in connections with any inspections, tests or approval required in connection with the OWNER's or ENGINEER's acceptance of materials or equipment to be incorporated in the Work; or acceptance of materials, mix designs, or equipment submitted for approval prior to the CONTRACTOR's purchase thereof for incorporation in the Work. Such inspections, tests, or approvals shall be performed by organizations acceptable to the OWNER and ENGINEER.

13.03.5. If any Work (or the work of others) that is to be inspected, tested or approved is covered by the CONTRACTOR without written concurrence of the ENGINEER, it must, if requested by the ENGINEER, be uncovered for observation.

13.03.6. Uncovering Work as provided in paragraph 13.03.5 shall be at the CONTRACTOR's expense, unless the CONTRACTOR has given the ENGINEER timely notice of the CONTRACTOR's intention to cover the same and the ENGINEER has not acted with reasonable promptness in response to such notice.

D. UNCOVERING WORK:

13.04.1. If any Work is covered contrary to the written request of the ENGINEER, it must, if requested by the ENGINEER,

be uncovered for the ENGINEER's observation and replaced at the CONTRACTOR's expense.

13.04.2. If the ENGINEER considers it necessary or advisable that covered Work be observed by the ENGINEER or inspected or tested by others, the CONTRACTOR, at the ENGINEER's request, shall uncover, expose or otherwise make available for observation, inspection or testing as the ENGINEER may require, that portion of the Work in question, furnishing all necessary labor, material and equipment.

13.04.3. If it is found that uncovered Work is defective, the CONTRACTOR shall pay all claims, costs, losses and damages (including but not limited to all fees and charges of engineers, attorneys, and other professional and all court or arbitration or other dispute resolution costs) arising out of or relating to such uncovering, exposure, observation, inspection and testing and of satisfactory replacement or reconstruction, (including but not limited to all costs of repair or replacement of work of others); and the OWNER shall be entitled to an appropriate decrease in the Contract Price. If the parties are unable to agree as to the amount thereof, the OWNER may make a claim therefore as provided in Article 10.

13.04.4. If, the uncovered Work is not found to be defective, the CONTRACTOR shall be allowed an increase in the Contact Price or an extension of Contract Times, or both, directly attributable to such uncovering, exposure, observation, inspection, testing, replacement, and reconstruction. If the parties are unable to agree as to the amount or extent thereof, the CONTRACTOR may make a claim therefore as provided in Article 10.

E. OWNER MAY STOP THE WORK:

13.05. If the Work is defective, or the CONTRACTOR fails to supply sufficient skilled workers or suitable materials or equipment, or fails to furnish or perform the Work in such a way that the completed Work will conform to the Contract Documents, the OWNER may order the CONTRACTOR to stop the Work, or any portion thereof, until the cause for such order has been eliminated; however, this right of the OWNER to stop the Work shall not give rise to any duty on the part of the OWNER to exercise this right for the benefit of the CONTRACTOR, any Subcontractor, any Supplier, any other individual or entity, or any surety for, or employee or agent of any of them.

F. CORRECTION OR REMOVAL OF DEFECTIVE WORK:

13.06.1. Promptly after receipt of notice, the CONTRACTOR shall correct all defective Work, whether or not fabricated, installed or completed, or, if the Work has been rejected by the ENGINEER, remove it from the Project and replace it with Work that is not defective. The CONTRACTOR shall pay all claims, costs, losses and damages (including but not limited to all fees and charges of engineers, attorneys and other professionals and all court or arbitration or other dispute resolution costs) arising out of or relating to such correction or removal (including but not limited to all costs of repair or replacement of work of others).

13.06.2. When correcting defective Work under the terms of this Paragraph 13.06 or Paragraph 13.07, the CONTRACTOR shall take no action that would void or otherwise impair the OWNER's special warranty and guarantee, if any, on said Work.

G. CORRECTION PERIOD:

13.07.1. If within one year after the date of Substantial Completion (or such longer period of time as may be prescribed by the terms of any applicable special guarantee required by the Contract Documents) or by any specific provision of the Contract Documents, any Work is found to be defective, or if the repair of any damages to the land or areas made available for the CONTRACTOR's use by the OWNER or permitted by Laws and Regulations as contemplated in applicable portions of Article 6 is found to be defective, the CONTRACTOR shall promptly, without cost to the OWNER and in accordance with the OWNER's written instructions:

a. repair such defective land or areas; or

b. correct such defective Work; or

c. if the defective Work has been rejected by the OWNER, remove it from the Project and replace it with Work that is not defective; and

d. satisfactorily correct or remove and replace any damage to other Work, to the work of others or other land or areas resulting there from.

13.07.2. If the CONTRACTOR does not promptly comply with the terms of the OWNER's written instructions, or in an emergency where delay would cause serious risk of loss or damage, the OWNER may have the defective Work corrected or repaired or may have the rejected Work removed and replaced. All claims, costs, losses and damages (including but not limited to all fees and charges of engineers, attorneys, and other professional and all court or arbitration or other dispute resolution costs)

arising out of or relating to such correction or repair or such removal and replacement (including but not limited to all costs of repair or replacement of work of others) will be paid by the CONTRACTOR.

13.07.3. In special circumstances, where a particular item of equipment is placed in continuous service before Substantial Completion of all the Work, the correction period for that item may start to run from an earlier date if so provided in the Specifications.

13.07.4. Where defective Work (and damage to other Work resulting there from) has been corrected or removed and replaced under this paragraph 13.07, the correction period hereunder with respect to such Work will be extended for an additional period of one year after such correction or removal and replacement has been satisfactorily completed.

13.07.5. The CONTRACTOR's obligations under this Paragraph 13.07 are in addition to any other obligation or warranty. The provisions of this Paragraph 13.07 shall not be construed as a substitute for or a waiver of the provisions of any applicable statute of limitation or repose.

H. ACCEPTANCE OF DEFECTIVE WORK:

13.08. If, instead of requiring correction or removal and replacement of defective Work, the OWNER (and, prior to the ENGINEER's recommendation of final payment, the ENGINEER) prefers to accept it, the OWNER may do so. The CONTRACTOR shall pay all claims, costs, losses and damages (including but not limited to all fees and charges of engineers, attorneys, and other professionals and all court or arbitration or other dispute resolution costs) attributable to the OWNER's evaluation of and determination to accept such defective Work (such costs to be approved by the ENGINEER as to reasonableness) and the diminished value of the Work to the extent not otherwise paid by the CONTRACTOR pursuant to this sentence. If any such acceptance occurs prior to the ENGINEER's recommendation of final payment, a Change Order will be issued incorporating the necessary revisions in the Contract Documents with respect to the Work; and the OWNER shall be entitled to an appropriate decrease in the Contract Price, reflecting the diminished value of Work so accepted. If the parties are unable to agree as to the amount thereof, the OWNER may make a claim therefore as provided in Article 10. If the acceptance occurs after such a recommendation, an appropriate amount will be paid by the CONTRACTOR to the OWNER.

I. OWNER MAY CORRECT DEFECTIVE WORK:

13.09.1. If the CONTRACTOR fails, within a reasonable time after written notice from the ENGINEER to correct defective Work or to remove and replace rejected Work as required by the ENGINEER in accordance with paragraph 13.06.1, or if the CONTRACTOR fails to perform the Work in accordance with the Contract Documents, or if the CONTRACTOR fails to comply with any other provision of the Contract Documents, the OWNER may, after seven days written notice to the CONTRACTOR, correct and remedy any such deficiency.

13.09.2. In exercising the rights and remedies under this Paragraph 13.09, the OWNER shall proceed expeditiously. In connection with such corrective and remedial action, the OWNER may exclude the CONTRACTOR from all or part of the Work site and suspend the CONTRACTOR's services related thereto, take possession of the CONTRACTOR's tools, appliances, construction equipment and machinery at the Work site, and incorporate in the Work all materials and equipment stored at the Work site or for which the OWNER has paid the CONTRACTOR but which are stored elsewhere. The CONTRACTOR shall allow the OWNER, the OWNER's representatives, agents and employees, OWNER's other contractors and the ENGINEER and ENGINEER's Consultants access to the Work site to enable the OWNER to exercise the rights and remedies under this Paragraph.

13.09.3 All claims, costs, losses and damages (including but not limited to all fees and charges of engineers, attorneys, and other professionals and all court or arbitration or other dispute resolution costs) incurred or sustained by the OWNER in exercising such rights and remedies under this Paragraph 13.09 will be charged against the CONTRACTOR, and a Change Order will be issued incorporating the necessary revisions in the Contract Documents with respect to the Work; and the OWNER shall be entitled to an appropriate decrease in the Contract Price. If the parties are unable to agree as to the amount of the adjustment, the OWNER may make a claim therefore as provided in Article 10. Such claims, costs, losses and damages will include but not be limited to all costs of repair, or replacement of work of others destroyed or damaged by corrections, removal or replacement of the CONTRACTOR's defective Work.

13.09.4. The CONTRACT shall not be allowed an extension of the Contract Times because of any delay in performance of the Work attributable to the exercise by the OWNER of the OWNER's rights and remedies under this Paragraph 13.09.

ARTICLE 14 --- PAYMENTS TO CONTRACTOR AND COMPLETION

A. SCHEDULE OF VALUES:

14.01. The Schedule of values established as provided in Article 2 will serve as the basis for progress payments and will be incorporated into a form of Application for Payment acceptable to the ENGINEER. Progress payments on account of Unit Price

Work will be based on the number of units completed.

B. PROGRESS PAYMENT:

14.02.1. Applications for Payments.

a. At least 20 days before the date established in the Agreement for each progress payment (but not more often than once a month), the CONTRACTOR shall submit to the ENGINEER for review an Application for Payment filled out and signed by the CONTRACTOR covering the Work completed as of the date of the Application and accompanied by such supporting documentation as is required by the Contract Documents. If payment is requested on the basis of materials and equipment not incorporated in the Work but delivered and suitably stored at the Work site or at another location agreed to in writing, the Application for Payment shall also be accompanied by a bill of sale, invoice or other documentation warranting that the CONTRACTOR has received the materials and equipment, free and clear of all Liens, charges, security interest, and encumbrances (which are hereinafter in these General Conditions referred to as "Liens") and evidence that the materials and equipment are covered by appropriate property insurance and other arrangements to protect the OWNER's interest therein, all of which will be satisfactory to the OWNER.

(1) Unless otherwise prescribed by law, the Value of Materials stored at the Site shall by 80% of the value of such materials.

b. Beginning with the second Application for Payment, each Application shall include an affidavit of the CONTRACTOR stating that all previous progress payments received on account of the Work have been applied on account to discharge the CONTRACTOR's legitimate obligations associated with prior Applications for Payment.

c. The amount of retainage with respect to progress payments will be as stipulated in the Agreement.

14.02.2. Review of Applications.

a. The ENGINEER will, within ten days after receipt of each Application for Payment, either indicate in writing a recommendation of payment and present the Application to the OWNER, or return the Application to the CONTRACTOR indicating in writing the ENGINEER's reason for refusing to recommend payment. In the latter case, the CONTRACTOR may make the necessary corrections and resubmit the Application.

b. The ENGINEER's recommendation of any payment requested in an Application for Payment will constitute a representation by the ENGINEER to the OWNER, based on the ENGINEER's observations on the Work site of the executed Work as an experienced and qualified design professional and on the ENGINEER's review of the Application for Payment and the accompanying data and schedules, that to the best of the ENGINEER's knowledge, information and belief:

(1) that the Work has progressed to the point indicated;

(2) the quality of the Work is generally in accordance with the Contract Documents (subject to an evaluation of the Work as a functioning whole prior to or upon Substantial Completion, to the results of any subsequent tests called for in the Contract Documents, to a final determination of quantities and classifications for Unit Price Work under applicable portions of Article 9, and to any other qualifications stated in the recommendation); and

(3) the conditions precedent to the CONTRACTOR's being entitled to such payment appear to have been fulfilled in so far as it is the ENGINEER's responsibility to observe the Work.

c. By recommending any such payment the ENGINEER will not thereby be deemed to have represented that:

(1) inspections made to check the quality or the quantity of the Work as it has been performed have been exhaustive, extended to every aspect of the Work in progress, or involved detailed inspections of the Work beyond the responsibilities specifically assigned to the ENGINEER in the Contract Documents; or

(2) that there may not be other matters or issues between the parties that might entitle the CONTRACTOR to be paid additionally by the OWNER or entitle the OWNER to withhold payment to the CONTRACTOR.

d. Neither the ENGINEER's review of the CONTRACTOR's Work for the purposes of recommending payments nor ENGINEER's recommendation of any payment, including final payment, will impose responsibility on the ENGINEER:

(1) to supervise, direct, or control the Work; or

(2) for the means, methods, techniques, sequences or procedures of construction, or the safety precautions and programs incident thereto; or

(3) for the CONTRACTOR's failure to comply with Laws and Regulations applicable to the CONTRACTOR's performance of the Work; or

(4) to make any examination to ascertain how or for what purposes the CONTRACTOR has used the moneys paid on account of the Contract Price; or.

(5) to determine that title to any of the Work, materials, or equipment has passed to the OWNER free and clear of any Liens.

e. The ENGINEER may refuse to recommend the whole or any part of any payment if, in the ENGINEER's opinion, it

would be incorrect to make such representations to the OWNER stated in Paragraph 14.02.2.b. The ENGINEER may also refuse to recommend any such payment, or, because of subsequently discovered evidence or the results of subsequent inspections or tests, revise or revoke any such payment previously made, to such extent as may be necessary in the ENGINEER's opinion to protect the OWNER from loss because:

(1) the Work is defective, or completed Work has been damaged requiring correction or replacement;
(2) the Contract Price has been reduced by Change Orders;
(3) the OWNER has been required to correct defective Work or complete Work in accordance with paragraph 13.09;
(4) the ENGINEER has actual knowledge of the occurrence of any of the events enumerated in paragraphs 15.02.1.

14.02.3. Payment Becomes Due.

a. Ten days after presentation of the Application for Payment to the OWNER with the ENGINEER's recommendation, the amount recommended will (subject to the provisions of Paragraph 14.02.4) become due, and when due will be paid by the OWNER to the CONTRACTOR.

14.03.4. Reduction in Payment.

a. The OWNER may refuse to make payment of the full amount recommended by the ENGINEER because:

(1) claims have been made against the OWNER on account of the CONTRACTOR's performance or furnishing of the Work;
(2) Liens have been filed in connection with the Work, except where the CONTRACTOR has delivered a specific bond satisfactory to the OWNER to secure the satisfaction and discharge of such Liens;
(3) there are other items entitling the OWNER to a set-off against the amount recommended; or
(4) the OWNER has actual knowledge of the occurrence of any of the events enumerated in appropriate portions of paragraphs 14.02.2, or paragraph 15.02.1.

b. If the OWNER refuses to make payment of the full amount recommended by the ENGINEER, the OWNER will give the CONTRACTOR immediate written notice (with a copy to the ENGINEER) stating the reasons for such action and promptly pay the CONTRACTOR any amount remaining after deduction of the amount so withheld. The OWNER shall promptly pay the CONTRACTOR the amount so withheld, or any adjustment thereto agreed to by the OWNER and CONTRACTOR, when the CONTRACTOR corrects to the OWNER's satisfaction the reasons for such action.

c. If it is subsequently determined that the OWNER's refusal was not justified, the amount wrongfully withheld shall be treated as an amount due as determined by Paragraph 14.02.3.a.

C. CONTRACTOR'S WARRANTY OF TITLE

14.03. The CONTRACTOR warrants and guarantees that title to all Work, materials, and equipment covered by any Application for Payment, whether incorporated in the Project or not, will pass to the OWNER no later that the time of payment free and clear of all Liens.

D. SUBSTANTIAL COMPLETION:

14.04.1. When the CONTRACTOR considers the entire Work ready for its intended use, the CONTRACTOR shall notify the OWNER and ENGINEER in writing that the entire Work is substantially complete (except for items specifically listed by the CONTRACTOR as incomplete) and request that the ENGINEER issue a certificate of Substantial Completion.

14.04.2. Promptly after the CONTRACTOR's notification, the OWNER, CONTRACTOR, and ENGINEER shall make an inspection of the Work to determine the status of completion. If the ENGINEER does not consider the Work substantially complete, the ENGINEER will notify the CONTRACTOR in writing giving the reason therefore.

14.04.3. If the ENGINEER considers the Work substantially complete, the ENGINEER will deliver to the OWNER a tentative certificate of Substantial Completion which shall fix the date of the Substantial Completion. There shall be attached to the certificate a tentative list of items to be completed or corrected before final payment. The OWNER shall have seven days after receipt of the tentative certificate during which to make written objection to the ENGINEER as to any provisions of the certificate or attached list. If, after considering such objections, the ENGINEER concludes that the Work is not substantially complete, the ENGINEER will within 14 days after submission of the tentative certificate to the OWNER notify the CONTRACTOR in writing, stating the reasons therefore. If, after consideration of the OWNER's objections, the ENGINEER considers the Work substantially complete, the ENGINEER will within said 14 days execute and deliver to the OWNER and CONTRACTOR a definitive certificate of Substantial Completion (with a revised tentative list of items to be completed or corrected) reflecting such changes from the tentative certificate as the ENGINEER believes justified after consideration of any objections from the OWNER.

14.04.4. At the time of delivery of the tentative certificate of Substantial Completion, the ENGINEER will deliver to the OWNER and CONTRACTOR a written recommendation as to division of responsibilities pending final payment between the OWNER and CONTRACTOR with respect to security, operation, safety, and protection of the Work, maintenance, heat, utilities, insurance and warranties and guarantees. Unless the OWNER and CONTRACTOR agree otherwise in writing and so inform the ENGINEER prior to the ENGINEER's issuing the definitive certificate of Substantial Completion, the ENGINEER's aforesaid

recommendation will be binding on the OWNER and CONTRACTOR until final payment.

14.04.5. The OWNER shall have the right to exclude the CONTRACTOR from the Work site after the date of Substantial Completion, subject to allowing the CONTRACTOR reasonable access to complete or correct items on the tentative list.

E. PARTIAL UTILIZATION:

14.05.1. Prior to Substantial Completion of all the Work, the OWNER may use or occupy any substantially completed part of the Work which has specifically been identified in the Contract Documents, or which the OWNER, ENGINEER, and CONTRACTOR agree constitutes a separately functioning and usable part of the Work that can be used by the OWNER for its intended purpose without significant interference with the CONTRACTOR's performance of the remainder of the Work, subject to the following conditions:

a. The OWNER at any time may request the CONTRACTOR in writing to permit the OWNER to use any such part of the Work which the OWNER believes to be ready for its intended use and substantially complete. If and when the CONTRACTOR agrees that such part of the Work is substantially complete, the CONTRACTOR will certify to the OWNER and ENGINEER that such part of the Work is substantially complete and request the ENGINEER to issue a certificate of Substantial Completion for that part of the Work.

b. The CONTRACTOR at any time may notify the OWNER and ENGINEER in writing that the CONTRACTOR considers any such part of the Work ready for its intended use and substantially complete and request the ENGINEER to issue a certificate of Substantial Completion for that part of the Work.

c. Within a reasonable time after either such request, the OWNER, CONTRACTOR and ENGINEER shall make an inspection of that part of the Work to determine its status of completion. If the ENGINEER does not consider that part of the Work to be substantially complete, the ENGINEER will notify the OWNER and CONTRACTOR in writing giving the reasons therefore. If the ENGINEER considers that part of the Work to be substantially complete, the provisions of paragraph 14.04 will apply with respect to certification of Substantial Completion of that part of the Work and the division of responsibility in respect thereof and access thereto.

d. No use or occupancy or separate operation of part of the Work may occur prior to compliance with the requirements of paragraph 5.10 regarding property insurance.

F. FINAL INSPECTION:

14.07. Upon written notice from the CONTRACTOR that the entire Work or an agreed portion thereof is complete, the ENGINEER will promptly make a final inspection with the OWNER and CONTRACTOR and will notify the CONTRACTOR in writing of all particulars in which this inspection reveals that the Work is incomplete or defective. The CONTRACTOR shall immediately take such measure as are necessary to complete such Work or remedy such deficiencies.

G. FINAL PAYMENT:

14.07.1. Application for Payment.

a. After the CONTRACTOR has, in the opinion of the ENGINEER, satisfactorily completed all corrections identified during the final inspection and has delivered in accordance with the Contract Documents all maintenance and operating instructions, schedules, guarantees, Bonds, certificates or other evidence of insurance certificates of inspection, marked-up record documents (as provided in paragraph 6.12) and other documents, the CONTRACTOR may make application for final payment following the procedure for progress payments.

b. The final Application for Payment shall be accompanied (except as previously delivered) by:

(1) all documentation called for in the Contract Documents, including but not limited to the evidence of insurance required by subparagraph 5.04.2.g;

(2) consent of the surety, if any, to final payment;

(3) a list of all claims against the OWNER that the CONTRACTOR believes are unsettled; and

(4) complete and legally effective releases or waivers (satisfactory to the OWNER) of all Lien rights arising out of or Lien filed in connection with the Work.

c. In lieu of such releases or waivers of Liens specified in Paragraph 14.07.1.b and as approved by the OWNER, the CONTRACTOR may furnish receipts or releases in full and an affidavit of the CONTRACTOR that: (i) the releases and receipts include all labor, services, materials and equipment for which a Lien could be filed; and (ii) all payrolls, material and equipment bills, and other indebtedness connected with the Work for which the OWNER or OWNER's property might in any way be responsible, have been paid or otherwise satisfied. If any Subcontractor or Supplier fails to furnish such a release or receipt in full, the CONTRACTOR may furnish a Bond or other collateral satisfactory to the OWNER to indemnify the OWNER against any Lien.

14.07.2. Engineer's Review of Application and Acceptance.

a. If, on the basis of the ENGINEER's observation of the Work during construction and final inspection, and the ENGINEER's review of the final Application for Payment and accompanying documentation as required by the Contract Documents, the ENGINEER is satisfied that the Work has been completed and the CONTRACTOR's other obligations under the Contract Documents have been fulfilled, the ENGINEER will, within ten days after receipt of the final Application for Payment, indicate in writing the ENGINEER's recommendation of payment and present the Application to the OWNER for payment. At the same time the ENGINEER will also give written notice to the OWNER and CONTRACTOR that the Work is acceptable subject to the provisions of paragraph 14.09. Otherwise, the ENGINEER will return the Application to the CONTRACTOR, indicating in writing the reasons for refusing to recommend final payment, in which case the CONTRACTOR shall make the necessary corrections and resubmit the Application.

14.07.3. Payment Becomes Due.

a. Thirty days after presentation to the OWNER of the Application for Payment and accompanying documentation, the amount recommended by the ENGINEER, less any sum the OWNER is entitled to set off against the ENGINEER's recommendation, including but not limited to liquidated damages, will become due, and will be paid by the OWNER to the CONTRACTOR.

H. FINAL COMPLETION DELAYED

14.08. If, though no fault of the CONTRACTOR, final completion of the Work is significantly delayed, and if the ENGINEER so confirms, the OWNER shall, upon receipt of the CONTRACTOR's final Application for Payment (for Work fully completed and accepted) and recommendation of the ENGINEER, and without terminating the Contract, make payment of the balance due for that portion of the Work fully completed and accepted. If the remaining balance to be held by the OWNER for Work not fully completed or corrected is less than the retainage stipulated in the Agreement, and if Bonds have been furnished as required in paragraph 5.01, the written consent of the surety to the payment of the balance due for that portion of the Work fully completed and accepted shall be submitted by the CONTRACTOR to the ENGINEER with the Application for such payment. Such payment shall be made under the terms and conditions governing final payment, except that it shall not constitute a waiver of claims.

I. WAIVER OF CLAIMS:

14.09.1. The making and acceptance of final payment will constitute:

a. A waiver of all claims by the OWNER against the CONTRACTOR, except claims arising from unsettled Liens, from defective Work appearing after final inspection pursuant to paragraph 14.06, from failure to comply with the Contract Documents or the term of any special guarantees specified therein, or from CONTRACTOR's continuing obligations under the Contract Documents; and

b. A waiver of all claims by the CONTRACTOR against the OWNER other than those previously made in accordance with the requirements herein and expressly acknowledged by the OWNER inwriting and still unsettled.

ARTICLE 15 --- SUSPENSION OF WORK AND TERMINATION

A. OWNER MAY SUSPEND WORK:

15.01. At any time and without cause, the OWNER may suspend the Work or any portion thereof for a period of not more than 90 consecutive days by notice in writing to the CONTRACTOR and ENGINEER which will fix the date on which the Work will be resumed. The CONTRACTOR shall resume the Work on the date so fixed. The CONTRACTOR shall be allowed an adjustment in the Contract Price or an extension of the Contract Times, or both, directly attributable to any such suspension if the CONTRACTOR makes a claim therefore as provided in Paragraph 10.05.

B. OWNER MAY TERMINATE FOR CAUSE:

15.02.1. the occurrence of any one or more of the following events will justify termination for cause:
a. The CONTRACTOR's persistent failure to perform the Work in accordance with the Contract Documents (including, but not limited to, failure to supply sufficient skilled workers or suitable materials or equipment or failure to adhere to the progress schedule established under paragraph 2.07 as adjusted from time to time pursuant to paragraph 6.04);

b. The CONTRACTOR's disregard of Laws or Regulations of any public body having jurisdiction;

c. The CONTRACTOR's disregard of the authority of the ENGINEER; or

d. The CONTRACTOR's violation in any substantial way of any provisions of the Contract Documents.

15.02.2. If one or more of the events identified in Paragraph 15.02.1 occur, the OWNER may, after giving the CONTRACTOR (and surety) seven days written notice of its intent to terminate the services of the CONTRACTOR:

a. exclude the CONTRACTOR from the Work site, and take possession of the Work and of all the CONTRACTOR's tools, appliances, construction equipment and machinery at the Work site, and use the same to the full extent they could be used by the CONTRACTOR (without liability to the CONTRACTOR for trespass or conversion),

b. incorporate in the Work all materials and equipment stored at the Work site or for which the OWNER has paid the CONTRACTOR but which are stored elsewhere, and

c. complete the Work as the OWNER may deem expedient.

15.02.3. If the OWNER proceeds as provided in Paragraph 15.02.2, the CONTRACTOR shall not be entitled to receive any further payment until the Work in completed. If the unpaid balance of the Contract Price exceeds all claims, costs, losses and damages (including but not limited to all fees and charges of engineers, attorneys, and other professionals and all court or arbitration or other dispute resolution costs) sustained by the OWNER arising out of or resulting from completing the Work, such excess will be paid to the CONTRACTOR. If such claims, costs, losses and damages exceed such unpaid balance, the CONTRACTOR shall pay the difference to the OWNER. Such claims, costs, losses and damages incurred by the OWNER will be reviewed by the ENGINEER as to their reasonableness and when so approved by the ENGINEER, incorporated in a Change Order. When exercising any rights or remedies under this paragraph the OWNER shall not be required to obtain the lowest price for the Work performed.

15.02.4. Notwithstanding Paragraphs 15.02.2 and 15.02.3, the CONTRACTOR's services will not be terminated if the CONTRACTOR begins, within seven days of receipt of notice of intent to terminate, to correct its failure to perform and proceeds diligently to cure such failure within no more that 30 days of receipt of said notice.

15.02.5. Where the CONTRACTOR's services have been so terminated by the OWNER, the termination will not affect any rights or remedies of the OWNER against the CONTRACTOR then existing or which may thereafter accrue. Any retention or payment of the moneys due the CONTRACTOR by the OWNER will not release the CONTRACTOR from liability.

15.02.6. If and to the extent that the CONTRACTOR has provided a performance bond under the provisions of Paragraph 5.01.1, the termination procedures of that bond shall supersede the provisions of Paragraph 15.02.2 and 15.02.3.

C. OWNER MAY TERMINATE FOR CONVENIENCE

15.03.1. Upon seven days written notice to the CONTRACTOR and ENGINEER, the OWNER may, without cause and without prejudice to any other right or remedy of the OWNER, terminate the Contract. In such case, the CONTRACTOR shall be paid for (without duplication of any items):

a. completed and acceptable Work executed in accordance with the Contract Documents prior to the effective date of termination, including fair and reasonable sums for overhead and profit on such Work;

b. expenses sustained prior to the effective date of termination in performing services and furnishing labor, materials or equipment as required by the Contract Documents in connection with uncompleted Work, plus fair and reasonable sums for overhead and profit on such expenses;

c. all claims, costs, losses and damages (including but not limited to all fees and charges of engineers, attorneys, and other professionals and all court or arbitration or other dispute resolution costs) incurred in settlement of terminated contracts with Subcontractors, Suppliers and others; and

d. reasonable expenses directly attributable to termination.

D. CONTRACTOR MAY STOP WORK OR TERMINATE

15.04.1. If, through no act or fault of the CONTRACTOR, (i) the Work is suspended for more than 90 consecutive days by the OWNER or under an order of court or other public authority, or (ii) the ENGINEER fails to act on any Application for Payment within 30 days after it is submitted, or (iii) the OWNER fails for 30 days to pay the CONTRACTOR any sum finally determined to be due, then the CONTRACTOR may, upon seven days written notice to the OWNER and ENGINEER, and provided the OWNER and ENGINEER do not remedy such suspension or failure within that time, terminate the Contract and recover from the OWNER payment on the same terms as provided in Paragraph 15.03.

15.04.2. In lieu of terminating the Contract and without prejudice to any other right or remedy, if the ENGINEER has failed

to act on an Application for Payment within 30 days after it is submitted, or the OWNER has failed for 30 days to pay the CONTRACTOR any sum finally determined to be due, the CONTRACTOR may, seven days after written notice to the OWNER and ENGINEER, stop the Work until payment is made of all such amounts due the CONTRACTOR, including interest thereon. The provisions of this paragraph 15.04 are not intended to preclude the CONTRACTOR from making claim under Paragraph 10.05 for an adjustment in Contract Price or Contract Times or otherwise for expenses or damage directly attributable to the CONTRACTOR's stopping Work as permitted by this paragraph.

ARTICLE 16 --- DISPUTE RESOLUTION

A. METHODS AND PROCEDURES

16.01.1. Either the OWNER or CONTRACTOR may request mediation of any claim submitted to the ENGINEER for a decision under applicable portions of Article 10 before such decision becomes final and binding. The mediation will be governed

by the Construction Industry Mediation Rules of the American Arbitration Association in effect as of the Effective Date of the Agreement. The request for mediation shall be submitted in writing to the American Arbitration Association and the other party to the Contract. Timely submission of the request shall stay the effect of Paragraph 10.05.5.

16.01.2. The OWNER and CONTRACTOR shall participate in the mediation process in good faith. The process shall be concluded within 60 days of filing of the request. The date of termination of the mediation shall be determined by application of the mediation rules referenced above.

16.01.3. If the Claim is not resolved by mediation, the ENGINEER's action under Paragraph 10.05.3 or a denial pursuant to Paragraph 10.05.3.c or 10.05.4 shall become final and binding 30 days after termination of the mediation, unless, within that time period, the OWNER or CONTRACTOR:

1. elects in writing to invoke any dispute resolution process provided for in the Supplemental General Conditions; or
2. agrees with the other party to submit the Claim to another dispute resolution process; or
3. gives written notice to the other party of their intent to submit the Claim to a court of competent jurisdiction.

ARTICLE 17 --- MISCELLANEOUS

A. GIVING NOTICE:

17.01.1. Whenever any provision of the Contract Documents requires the giving of written notice, it will be deemed to have been validly given if:

1. delivered in person to the individual or to a member of the firm or to an officer of the corporation for whom it is intended; or,

2. delivered at or sent by registered or certified mail, postage prepaid, to the last business address known to the giver of the notice.

B. COMPUTATION OF TIME:

17.02. When any period of time is referred to in the Contract Documents by days, it will be computed to exclude the first and include the last day of such period. If the last of any such period falls on a Saturday or Sunday or on a day made a legal holiday by the law of the applicable jurisdiction, such day will be omitted from the computation.

C. CUMULATIVE REMEDIES

17.03. The duties and obligations imposed by these General Conditions and the rights and remedies available hereunder to the parties hereto are in addition to, and are not to be construed in any way as a limitation of, any rights and remedies available to any or all of them which are otherwise imposed or available by Laws or Regulations, by special warranty or guarantee or by other provisions of the Contract Documents. The provisions of this Paragraph will be as effective as if repeated specifically in the Contract Documents in connection with each particular duty, obligation, right and remedy to which they apply.

D. SURVIVAL OF OBLIGATIONS

17.04. All representatives, indemnifications, warranties, and guarantees made in, required by, or given in accordance with the Contract Documents, as well as all continuing obligations indicated in the Contract Documents, will survive final payment, completion, and acceptance of the Work or termination or completion of the Contract or termination of the services of the CONTRACTOR.

E. CONTROLLING LAW

17.05. This Contract is to be governed by the law of the state in which the Project is located.

F. HEADINGS

17.06. Article and paragraph headings are inserted for convenience only and do not constitute parts of these General Conditions.

END OF GENERAL CONDITIONS

CONTRACT DOCUMENTS
FOR
PUMPHOUSE #5 AND TOP OF MOUNTAIN WATER SYSTEM
LOCATED AT POWDER MOUNTAIN SKI RESORT
FOR
POWDER MOUNTAIN WATER AND SEWER IMPROVEMENT DISTRICT
POWDER MOUNTAIN, UTAH

PROJECT NO. PWM.019.21

MARCH 2022

GILSON ENGINEERING, INC. CONSULTING ENGINEERS AND SURVEYORS

Prepared _____ James J. Milligan, P.E.

Checked _____

Approved _____ Bradley S. Gilson, P.E.

12401 South 450 East
Building C, Unit 2
Draper, Utah 84020
Phone: 801-571-9414

TABLE OF CONTENTS PAGE

00100 - Invitation To Bid 00100-1

00200 - Instructions to Bidders . . . . . 00200-1 thru 00200-4

00260 - Contractor's Qualification and Experience Affidavit . . . . . 00260-1 thru 00260-4

00410 - Bid 00410-1

00420 - Bid Schedule . . . . . 00420-1 thru 00420-7

00450 - Bid Bond . . . . . 00450-1 and 00450-2

00500 - Agreement . . . . . 00500-1 thru 00500-3

00510 - Payment Bond . . . . . 00510-1 and 00510-2

00520 - Performance Bond . . . . . 00520-1 and 00520-2

00530 - Notice of Award 00530-1

00540 - Notice to Proceed 00540-1

00560 - Change Order 00560-1

00570 - Notice of Substantial Completion 00570-1

00580 - Notice of Completion 00580-1

00700 - General Conditions
(Table of Contents Preceding)

Technical Specifications (Table of Contents Preceding)

Drawings (Enumerated in Supplemental General Conditions)

SECTION 00100

INVITATION TO BID

POWDER MOUNTAIN WATER AND SEWER IMPROVEMENT DISTRICT
298 24th Street, Suite 150
Ogden, Utah 84401

Sealed BIDS for construction of the "PUMP HOUSE #5 AND TOP OF MOUNTAIN WATER SYSTEM PROJECT, LOCATED AT POWDER MOUNTAIN SKI RESORT, --- PROJECT # PWM.019.21", will be received by the DISTRICT at the office of the DISTRICT ENGINEER, 12401 South 450 East, Unit C2, Draper, Utah 84020, until 2:00 PM, MARCH 31, 2022; and then at said office publicly opened and read aloud. Reading of the BIDS will be broadcast Via Online Meeting (Meeting ID and Passcode; To Be Provided to all on BIDDERS LIST).

The work includes furnishing all labor, tools, materials, equipment, transportation and services required for building improvements for new pump house to be constructed, attached to, an existing culinary water pump house at the above-described location, in Weber County Utah. BASE WORK consists of the following items of work: mobilization, traffic control, and erosion control; clearing and grubbing work areas; all required general earthwork, including general excavating, backfilling, construction of embankments, grading, and compacting; furnishing, placing and compacting sub-base fill material; furnishing and placing borrow material for embankments and fill; constructing new wood frame building for new pumphouse on new concrete foundation, including all required earthwork, concrete work, metal door & frame, carpentry work, insulation, metal roof system and trim, with; plumbing system (pump, piping, and controls), electric unit heaters, and electrical system supplied and installed by others; standby generator supplied and installed by others; connecting new 10-inch pump supply pipe to existing 16-inch pipe line; furnishing and installing new 10-inch water line connection to existing waterline; furnishing, placing and compacting new gravel surfaces; placing and compacting new surfaces; furnishing, including gravel road base; furnishing and installing new PRV station; and all appurtenant work; in accordance with drawings and specifications prepared by Gilson Engineering.

CONTRACT DOCUMENTS may be examined at the office of Gilson Engineering, 12401 South 450 East, Bldg. C-2, Draper, Utah.

CONTRACT DOCUMENTS can be reviewed and downloaded from DISTRICT (https://www.pmwsid.org/) website or provided via email request to Gilson Engineering at debbie@gilsonengineering.com.

Bid must be accompanied by a Bid Bond, Certified Check or Cashier's Check in the amount of 5% of the maximum bid price, drawn payable to the order of POWDER MOUNTAIN WATER AND SEWER IMPROVEMENT DISTRICT.

.

All Bids submitted shall be in conformance with the Instructions to Bidders which are included in the Contract Documents; and shall be guaranteed by the Bidder for a period of ninety (90) days from the date of Bid opening.

The District hereby reserves the right to reject any or all bids presented, to waive any informality in a bid, and to make award or refuse to make award in the interest of the DISTRICT.

Date:_____ By: _____.

SECTION 00200

INSTRUCTIONS TO BIDDERS

1. DEFINITION OF TERMS.

a. Bidder. One who submits a BID for the WORK directly to the OWNER; distinct from a sub-bidder who submits a bid to a Bidder.

b. Successful Bidder. The lowest, qualified, responsible and responsive BIDDER to whom the OWNER, on the basis of the Owner's evaluation as hereinafter provided, makes an award.

c. Bidding Documents. Documents includes the INVITATION TO BID, INSTRUCTIONS TO BIDDERS, the BID Form, and the proposed Contract Documents (including all Addenda issued prior to receipt of Bids).

d. Owner. The OWNER is the Powder Mountain Water and Sewer Improvement District, located at 298 24th Street Suite 150, Ogden, Utah 84401.

e. Project Engineer. The PROJECT ENGINEER is Gilson Engineering, located at 12401 South 450 East, Building C-2, Draper, Utah 84020.

2. BIDDING DOCUMENTS. Complete sets of BIDDING DOCUMENTS may be obtained as provided in the INVITATION TO BID. These BIDDING DOCUMENTS must be used in preparing BIDS; the OWNER does not assume any responsibility for errors or misinterpretations resulting from the use of incomplete sets of BIDDING DOCUMENTS.

3. EXAMINATION OF CONTRACT DOCUMENTS AND SITE OF WORK. Before submitting a BID, each BIDDER shall:

a. carefully examine the specifications, drawings, and other Contract Documents;

b. visit the site of the Work to become familiar with local conditions that may affect costs, progress, performance, or furnishing of the Work;

c. consider federal, state and local laws, rules and regulations that may affect costs, progress, performance, or furnishing of the Work;

d. study and carefully correlate Bidder's observations with the Contract Documents; and

e. give written notice of all conflicts, errors, or discrepancies in the Contract Documents.

The failure or omission of the BIDDER to do any of the foregoing shall in no way relieve any BIDDER from any obligation in respect to his BID.

If any BIDDER, contemplating submitting a BID for the WORK, is in doubt as to the meaning of any part of the proposed Contract Documents, or finds any discrepancies therein, such BIDDER may submit to the ENGINEER a written request for interpretation thereof no later than five (5) day prior to the date set for opening of BIDS. The BIDDER submitting such request shall be responsible for its prompt and timely delivery to the ENGINEER. Any interpretation or correction of proposed Contract Documents will be made only by Addendum; and will be mailed or delivered to each prospective Bidder of record. The OWNER will not be responsible for any other explanations or interpretations of the proposed Contract Documents.

Any reports, estimates or test results provided to BIDDERS by the OWNER or the ENGINEER are not part of the Contract Documents; and the BIDDER shall make his own interpretations, estimates, inspections, or opinions concerning matters contained therein or pertaining to the completeness thereof for the purposes of bidding on the WORK. BIDDERS shall visit the site of the WORK; and shall conduct such inspections, explorations and tests as each BIDDER deems necessary for submission of a BID. Such examinations, investigations, explorations and tests shall be performed at the BIDDER's own expense. BIDDERS shall fill all holes, cleanup and restore the site to its former condition upon completion of any such explorations or tests. BIDDERS must satisfy themselves of the accuracy of the

estimated quantities shown in the BID SCHEDULE. Inspection trips for prospective BIDDERS may be arranged by contacting the ENGINEER, phone # 801-571-9414. Submission of a BID will constitute an express representation by the BIDDER that the BIDDER has complied with every requirement of this paragraph. After the BID has been submitted, the BIDDER shall not assert that there was a misunderstanding concerning the quantities of work to be done. Without exception, the BID is premised upon performing and furnishing the WORK required by the Contract Documents and any methods or procedures required therein.

4. BID SECURITY. Each BID must be accompanied by BID Security made payable to the OWNER in an amount of five (5) percent of the BIDDER's maximum BID price; and in the form of either a BID BOND issued by a surety acceptable to the Owner, a certified check or a cashier's check. BID Security of the Successful BIDDER will be retained until such BIDDER has executed the AGREEMENT and has furnished the required Contract Security and evidence of Insurance; whereupon the BID Security will be returned. If the Successful BIDDER fails to execute and deliver the AGREEMENT, BONDS, and evidence of Insurance within five (5) days after NOTICE OF AWARD, The OWNER may annul the NOTICE OF AWARD and the BID Security of that BIDDER will be forfeited. The BID Security of all other Bidders whom the OWNER believes to have a reasonable chance of receiving the award may be retained by the OWNER until three (3) days after the effective date of the AGREEMENT. BID Security submitted with BIDS which are not competitive will be returned within ten (10) days after the date of the BID opening.

5. CONTRACT TIME AND LIQUIDATED DAMAGES. The AGREEMENT will include the requirement that the WORK be completed in Ninety (90) calendar days after the date of the NOTICE TO PROCEED. The AGREEMENT will include a stipulation that liquidated damages will be assessed in the amount of $ 600.00 per calendar day for each calendar day after the agreed completion date that the WORK is not fully certified by the DISTRICT ENGINEER as being substantially complete as defined in the Contract Documents. After the Substantial Completion, Work must be completed within 20 calendar days or Liquidated Damages will be charged at $600.00 per calendar day.

6. FORM OF BID. All BIDS shall be made on the BID Forms included with the Bidding Documents. All blank on the BID Form must be completed in ink or typewritten. No additions, deletions, or alterations shall be made to the BID Form. Any unauthorized conditions, limitations, qualifications or provisions attached to the BID may render the BID unresponsive and may cause its rejection. No telegraphic Bid or telegraphic modification of a Bid will be considered.

BIDS by corporations must be executed in the corporate name by the president or vice-president or other authorized corporate officer, accompanied by evidence of authority to sign, and the corporate seal should be affixed thereto. BIDS by partnerships shall be executed in the partnership's name and signed by a partner having authority on behalf of the partnership. All BIDS submitted must be signed by the BIDDER or the BIDDER's authorized representative. All names should be typed or printed below the signature. The BID shall contain an acknowledgment of receipt of all ADDENDA (the numbers of which must be filled in on the Bid Form). The address and telephone number of the BIDDER must be shown for communications regarding the BID.

7. SUBMISSION OF BIDS. BIDS shall be submitted at the time and place indicated in the INVITATION TO BID. BIDS shall be enclosed in a sealed envelope addressed to POWDER MOUNTAIN WATER AND SEWER IMPROVEMENT DISTRICT; and marked on the outside with "PUMPHOUSE #1 STATION PROJECT" # PWM.010.20 - PHASE II"; and the name, address, and license number of the BIDDER. BID must be accompanied by the Bid Security and all other required documents. Only the original signed copy of the BID shall be submitted. If forwarded by mail, the sealed envelope containing the BID must be enclosed in another envelope addressed to the OWNER at PO Box 6156 Clearfield, Utah 84089-6156. Any Bids received after the scheduled closing time for receipt of BIDS will not be accepted or considered and will be returned to the BIDDER unopened.

8. MODIFICATION AND WITHDRAWAL OF BIDS. BIDS may be modified or withdrawn by the BIDDER by means of a written request, signed by the BIDDER or his duly authorized representative. Such written request must be delivered to the place stipulated in the INVITATION TO BID for receipt of BIDS prior to the opening of BIDS or authorized postponement thereof.

If, within twenty-four (24) hours after BIDS are opened, any BIDDER files a duly signed, written notice with the OWNER and promptly thereafter demonstrates to the reasonable satisfaction of the OWNER that there was a material and substantial mistake in the preparation on its BID, that BIDDER may withdraw its BID and the BID Security will be returned. Thereafter, that BIDDER will be disqualified from further bidding on the WORK to be provided under the Contract Documents.

Except as provided above, no BIDDER may withdraw a BID within sixty (60) days after the actual date of the opening thereof. Should there be reasons why the contract cannot be awarded within the specified period, the time may be extended by mutual agreement between the OWNER and the BIDDER.

9. OPENING OF BIDS. BIDS will be opened as indicated in the INVITATION TO BID and, unless obviously non-responsive, read aloud publicly. All BIDS will remain subject to acceptance for sixty (60) days after the day of the BID Opening; but the OWNER may, in its sole discretion, release any BID and return the BID Security prior to that date.

10. DETERMINATION OF BID AMOUNT. Determination of the total amount of the BID shall be based on the correct extension and addition of BID SCHEDULE items. Discrepancies in the multiplication of units of work and unit prices will be resolved in favor of the unit prices. Discrepancies between the indicated sum of any column of any figures and the correct sum thereof will be resolved in favor of the correct sum.

11. AWARD OF CONTRACT. The OWNER reserves the right to reject any and all BIDS, to waive any and all informalities not involving price, time, or changes in the WORK, and to negotiate contract terms with the Successful BIDDER; and the right to disregard all nonconforming, non-responsive, unbalanced, or conditional BIDS. The OWNER further reserves the right to reject the BID of any BIDDER if the OWNER believes it would not be in the best interest of the Project to make an award to that BIDDER, whether because that BID is non-responsive or the BIDDER is unqualified or of doubtful financial ability or fails to meet any other pertinent standards or criteria established by the OWNER.

To demonstrate qualifications to perform the work, each BIDDER must be prepared to submit, within five (5) days of the OWNER's request, written evidence, such as financial statements, previous work experience, present commitments, and other such information and data as may be required. BIDDERS must hold an appropriate, valid Contractor's license and be properly qualified to do business in the Spanish Fork area.

The OWNER may consider the qualifications and experience of sub-contractors, suppliers and other organizations or persons proposed for portions of the WORK. The apparent low BIDDER shall supply the names and addresses of suppliers, subcontractors and other persons for portions of the work when requested to do so by the OWNER. The OWNER may also consider the operating costs, maintenance requirements, performance data, and guarantees of major items of the materials and equipment proposed for incorporation into the WORK when such data is required to be submitted prior to the NOTICE OF AWARD.

The OWNER may conduct such investigations as the OWNER deems necessary or desirable to assist in the evaluation of any BID to establish the responsibility, qualifications and financial ability of BIDDER, proposed subcontractors, suppliers, and other persons and organizations to perform and furnish the WORK in accordance with the Contract Documents to the OWNER's satisfaction within the prescribed time.

If the Contract is to be awarded, it will be awarded to the lowest, responsible BIDDER whose evaluation by the OWNER indicates to the OWNER that the award will be in the best interest of the City.

If the Contract is to be awarded, the OWNER will give the Successful BIDDER a NOTICE OF AWARD within sixty (60) days after the date of the BID opening, unless a longer waiting period before award is expressly provided in the INVITATION TO BID.

12. EXECUTION OF AGREEMENT. The form of AGREEMENT which the Successful BIDDER will be required to execute is included in the Contract Documents. The BIDDER to whom the AWARD OF CONTRACT is made shall, within TEN (10) calendar days after the NOTICE OF AWARD from the OWNER, execute the AGREEMENT on the form provided, secure and furnish to the OWNER all insurance and all bonds required by the Contract Documents and the signed AGREEMENT. All bonds and certificates of insurance shall be submitted to and approved by the OWNER before the Successful BIDDER may proceed with the WORK. Failure or refusal to enter into and deliver the AGREEMENT as herein provided or to comply with any of the requirements connected thereto shall be just cause for annulment of the award and the forfeiture of the BID security. If the Successful BIDDER refuses or fails to execute the AGREEMENT, the OWNER may award the Contract to the next lowest, responsible BIDDER.

13. CONTRACT SECURITY. When the Successful BIDDER delivers the executed AGREEMENT to the OWNER, it must be accompanied by the required Labor and Materials PAYMENT BOND and a PERFORMANCE BOND, each in the amount of ONE HUNDRED (100) PERCENT of the Contract Price and each on the forms provided in the Contract Documents or accepted form. These BONDS shall be issued by a surety acceptable to the Owner and the cost of such BONDS shall be included in the BID. Attorneys-in-fact who sign BID BONDS or PAYMENT BONDS and PERFORMANCE BONDS must file with each BOND a certified and effective dated copy of their Power-of-Attorney.

14. INSURANCE. When the Successful BIDDER delivers the executed AGREEMENT to the OWNER, it must be accompanied by the required insurance as evidenced by certificates of insurance issued by a reputable insurance company acceptable to the Owner.

15. EXECUTION BY OWNER. Within TEN (10) calendar days of receipt of the signed AGREEMENT from the Successful BIDDER, together with the required Contract Security and insurance in a form acceptable to the OWNER, the OWNER shall cause its duly authorized representative to execute the AGREEMENT and the OWNER shall deliver one fully signed AGREEMENT to the Successful BIDDER. Each counterpart of the AGREEMENT shall be executed by the OWNER and the Successful BIDDER.

16. NOTICE TO PROCEED. A NOTICE TO PROCEED shall be issued within TEN (10) day of the execution of the AGREEMENT by the OWNER. Should there be reasons why the NOTICE TO PROCEED cannot be issued within such period, the time may be extended by mutual agreement between the OWNER and CONTRACTOR. If the NOTICE TO PROCEED has not been issued within the TEN (10) day period or within the period mutually agreed upon, the CONTRACTOR may terminate the AGREEMENT without further liability on the part of either party.

17. CLAIMS BY BIDDER. By submitting a BID, each BIDDER agrees to waive any claim it has or may have against the OWNER, the Engineer, and their respective employees, arising out of or in connection with the administration, evaluation or recommendations of any BID.

SECTION 00260

CONTRACTOR'S QUALIFICATION AND EXPERIENCE AFFIDAVIT

The BIDDER shall furnish all of the following information. Failure to comply with this requirement will render the BID non-responsive and will cause its rejection. Additional sheets shall be attached as required.

Award of Contract will be based upon review and evaluation of this Affidavit.

A. Contractor's name and address:

_____

_____

_____

B. Contractor's Telephone Number: _____Fax_____

C. Contractor's Email Address:_____

D. Contractor's License: Primary Classification _____

State License No. _____

Supplemental Classification held, if any: _____

E. Number of years as a contractor in Construction Work of this type: _____

F. Names and titles of Principal Officers of Contractor's Firm:

Name	Title

G. Name of person who inspected site of proposed work for your firm:

Name: _____ Date of Inspection: _____

H. Name, address, and telephone number of surety company and agent who will provide the required bonds on this Contract:

_____

_____

I. List of current jobs now under construction:

Client	Telephone No.	Dollar Amount.	Type of Job

J. List two projects of this size and complexity completed within the last five years:

Client	Telephone No.	Dollar Amount.	Type of Job

K. List history of similar projects with the City of Saratoga Springs:

Project	Project History	Was City Satisfied with Work?

L. List History of Product to be used on the Project:

_____

_____

M. List History of service for Product to be used on the Project:

_____

_____

N. Have you ever failed to complete any work awarded to your company? If so, when, where and why?

_____

O. List your major equipment available for this Contract:

_____ _____

_____ _____

_____ _____

_____ _____

_____ _____

P. List projects that you have failed to complete on the original schedule over the past two years:

Client	Telephone No.	Dollar Amount.	Type of Job

Q. List projects that you have failed to complete on the adjusted schedule over the past two years:

Client	Telephone No.	Dollar Amount.	Type of Job

R. Submit a copy of OSHA 300 for the past two years.

S. Submit a copy of citation history from OSHA for past two years.

T. Have you had any problems with OSHA in the last two years? If so, identify the problems and specify how the problems were resolved.

U. Are you in compliance with all applicable laws and governmental regulations? _____

V. Will you complete the project on time, as specified? _____

LIST OF SUBCONTRACTORS

The BIDDER shall list below the names and business address of each subcontractor who will perform Work under this Contract in excess of five percent (0.05) of the total bid price; and shall also list the portion of the Work which will be done by such subcontractor. After the opening of proposals, no changes or substitutions will be allowed without the written approval of the Engineer. Note: Attach additional sheets if required.

	WORK TO BE PERFORMED	SUBCONTRACTOR'S NAME AND ADDRESS
1.		
2.		
3.		
4.		
5.		
6.		

Respectively Submitted:

Signature	Address
Title	Date
Contractor License No.	Taxpayer Identification No.

SECTION 00410

BID

Proposal of _____ (hereinafter called "BIDDER"), organized and existing under the laws of the State of _____ doing business as _____.*

To POWDER MOUNTAIN WATER AND SEWER IMPROVEMENT DISTRICT, (hereinafter called "OWNER").

Hereby proposes to perform all WORK for construction of the "PUMPHOUSE #5 AND TOP OF MOUNTAIN WATER SYSTEM --- PROJECT # PMW.019.21, in strict accordance with the CONTRACT DOCUMENTS and DISTRICT'S TECHNICAL SPECIFICATIONS AND DRAWINGS, within the time set forth therein, and at the prices stated herein.

By submission of this BID, each BIDDER certifies, and in the case of a joint BID each party thereto certifies as to his own organization, that this BID has been arrived at independently, without consultation, communication, or agreement as to any matter relating to this BID with any other BIDDER or with any competitor.

BIDDER hereby agrees to commence WORK under this contract on or before a date to be specified in the NOTICE TO PROCEED and to fully complete the PROJECT within NINETY (90) calendar days thereafter. BIDDER further agrees to pay as liquidated damages, the sum of $ 600.00 for each calendar day thereafter.

BIDDER acknowledges receipt of the following ADDENDUM:

(NONE)

* Insert "a corporation", "a partnership"' or "an individual" as applicable.

Bond Number: _____

SECTION 00450

BID BOND

KNOW ALL MEN BY THESE PRESENTS, that we, the undersigned,_____ as principal, and _____ as Surety, are hereby held and firmly bound unto _____ as OWNER in the penal sum of _____ for the payment of which, well and truly to be made, we hereby jointly and severally bind ourselves, successors, and assigns.

Signed this _____ day of _____, 20___.

The condition of the above obligation is such that whereas the Principal has submitted to _____ a certain BID, attached hereto and hereby made a part hereof to enter into a contract in writing, for the _____ _____. NOW, THEREFORE,

(a) If said BID shall be rejected; or

(b) If said BID shall be accepted and the Principal shall execute and deliver a contract in the Form of Contract attached hereto (properly completed in accordance with said BID) and shall furnish a BOND for his faithful performance of said Contract, and for the payment of all persons performing labor or furnishing materials in connection therewith, and shall in all other respects perform the agreement created by the acceptance of said BID, then this obligation shall be void, otherwise the same shall remain in force and effect: it being expressly understood and agreed that the liability of the Surety for any and all claims hereunder shall, in no event, exceed the penal amount of this obligation as herein stated.

The Surety, for value received, hereby stipulates and agrees that the obligations of said Surety and its BOND shall be in no way impaired or affected by any extension of the time within which the OWNER may accept such BID; and said Surety does hereby waive notice of any such extension.

IN WITNESS WHEREOF, the Principal and the Surety have hereunto set their hands and seals, and such of them as are corporations have caused their corporate seals to be hereto affixed and these presents to be signed by their proper officers, the day and year first set forth above.

_____ (L.S.)
Principal

_____
Surety

By: _____

IMPORTANT – Surety companies executing bonds must appear on the Treasury Department's most current list (Circular 570, as amended) and be authorized to transact business in the state where the PROJECT is located.

SECTION 00500

AGREEMENT

THIS AGREEMENT, made this 1 day of _____, 2022, by and between the POWDER MOUNTAIN WATER AND SEWER IMPROVEMENT DISTRICT__, hereinafter called "OWNER" and _____ doing business as _____, hereinafter called "CONTRACTOR".

WITNESSETH: That for and in consideration of the payments and agreements hereinafter mentioned:

1. The CONTRACTOR will commence and complete construction of the "PUMPHOUSE #5 AND TOP OF MOUNTAIN WATER SYSTEM--- PROJECT # PMW.019.21".

2. The CONTRACTOR will furnish all of materials, supplies, tools, equipment, labor and other services necessary for the construction and completion of the PROJECTS described herein.

3. The CONTRACTOR will commence the WORK required by the CONTRACT DOCUMENTS within SEVEN (7) calendar days after the date of the NOTICE TO PROCEED; and will complete the same within NINETY (90) calendar days after the date of the NOTICE TO PROCEED; unless the period for completion is extended otherwise by the CONTRACT DOCUMENTS.

4. The CONTRACTOR agrees to perform all of the WORK described in the CONTRACT DOCUMENTS and comply with the terms therein for the sum as shown in the BID schedule.

5. The term "CONTRACT DOCUMENTS" means and includes the following:

(A) SECTION 00410 - BID
(B) SECTION 00420 - BID SCHEDULE
(C) SECTION 00450 - BID BOND
(C) SECTION 00500 – AGREEMENT
(D) SECTION 00510 – PAYMENT BOND
(E) SECTION 00520 – PERFORMANCE BOND
(K) SECTION 00530 - NOTICE OF AWARD
(L) SECTION 00540 - NOTICE TO PROCEED
(M) SECTION 00560 - CHANGE ORDER
(N) SECTION 00570 - NOTICE OF SUBSTANTIAL COMPLETION
(O) SECTION 00580 - NOTICE OF COMPLETION
(P) GENERAL CONDITIONS
(Q) SUPPLEMENTAL GENERAL CONDITIONS
(D) SPECIFICATIONS prepared and issued by GILSON ENGINEERING, Consulting Engineers, dated FEBRUARY, 2022.

(E) DRAWINGS prepared by Gilson Engineering, Consulting Engineers
(See enumeration in Supplemental General Conditions)

(F) ADDENDA:
NONE
No. ___ , dated _____ , 2022.

6. The OWNER will pay to the CONTRACTOR, in the manner and at such times as set forth in the General Conditions, such amounts as required by the CONTRACT DOCUMENTS.

7. This Agreement shall be binding upon all parties hereto and their respective heirs, executors, administrators, successors, and assigns.

IN WITNESS WHEREOF, the parties hereto have executed, or caused to be executed by their duly authorized officials, this Agreement in five (5) copies, each of which shall be deemed an original on the date first above written.

OWNER:

_____

BY _____

NAME _____
(Please Type)

TITLE _____

(SEAL)

ATTEST:

_____

NAME _____
(Please Type)

TITLE _____

CONTRACTOR:

_____

BY _____

NAME _____
(Please Type)

ADDRESS _____

_____

(SEAL)

ATTEST:

_____

NAME _____
(Please Type)

TITLE_____

SECTION 00510 Bond Number:_____

PAYMENT BOND

CONTRACTOR (Name and Address):
_____
_____
_____

SURETY (Name and Principal Place of Business):
_____
_____
_____

OWNER (Name of Address):
_____
_____
_____

CONSTRUCTION CONTRACT
Date: _____
Amount: _____
Description (Name and Location): _____

BOND:
Date (Not earlier than Construction Contract Date): _____
Amount: _____

Modification to this Bond: ___ None ___ See Page 2

CONTRACTOR AS PRINCIPAL

Company: (Corporate Seal)
_____

Signature: _____

Name and Title: _____

SURETY

Company: (Corporate Seal)
_____

Signature: _____

Name and Title: _____

(Any additional signatures appear on Page 2)

(FOR INFORMATION ONLY -- Name, Address and Telephone)
AGENT or BROKER: _____
_____

OWNER'S REPRESENTATIVE (Architect, Engineer or other party): _____
_____

1. The Contractor and the Surety, jointly and severally, bind themselves, their heirs, executors, administrators, successors and assigns to the Owner to pay for labor, materials and equipment furnished for use in the performance of the Construction Contract, which is incorporated herein by reference.
2. With respect to the Owner, this obligation shall be null and void if the Contractor:
   - 2.1 Promptly makes payment, directly or indirectly, for all sums due Claimants, and
   - 2.2 Defends, indemnifies and holds harmless the Owner from claims, demands, liens or suits by any person or entity whose claim, demand, lien or suit is for the payment of labor, materials or equipment furnished for use in the performance of the Construction Contract, provided the Owner has promptly notified the Contractor and the Surety (at the address described in Paragraph 12) of any claims, demands, liens or suits and tendered defense of such claims, demands, liens or suits to the Contractor and the Surety, and provided there is no Owner Default.
3. With respect to Claimants, this obligation shall be null and void if the Contractor promptly makes payment, directly or indirectly, for all sums due.
4. The Surety shall have no obligation to Claimants under this Bond until:
   - 4.1 Claimants who are employed by or have a direct contract with the Contractor have given notice to the Surety (at the address described in Paragraph 12) and sent a copy, or notice thereof, to the Owner, stating that a claim is being made under this Bond and, with substantial accuracy, the amount of the claim.
   - 4.2 Claimants who do not have a direct contract with the Contractor:
     - 4.2.1 Have furnished written notice to the Contractor and sent a copy, or notice thereof, to the Owner, within 90 days after having last performed labor or last furnished materials or equipment included in the claim stating, with substantial accuracy, the amount of the claim and the name of the party to whom the material were furnished or supplied or for whom the labor was done or performed; and
     - 4.2.2 Have either received a rejection in whole or in part from the Contractor, or not received within 30 days of furnishing the above notice any communication from the Contractor by which the Contractor has indicated the claim will be paid directly or indirectly; and
     - 4.2.3 Not having been paid within the above 30 days, have sent a written notice to the Surety (at the address described in Paragraph 12) and sent a copy, or notice thereof, to the Owner, stating that a claim is being made under this Bond and enclosing a copy of the previous written notice furnished to the Contractor.
5. If a notice required by Paragraph 4 is given by the Owner to the Contractor or to the Surety, that is sufficient compliance.

6. When the Claimant has satisfied the conditions of Paragraph 4, the Surety shall promptly and at the Surety's expense take the following actions:
   6.1 Send an answer to the Claimant, with a copy to the Owner, within 45 days after receipt of the claim, stating the amounts that are undisputed and the basis for challenging any amounts that are disputed.
   6.2 Pay or arrange for payment of any undisputed amounts.
7. The Surety's total obligation shall not exceed the amount of this Bond, and the amount of this Bond shall be credited for any payments made in good faith by the Surety.
8. Amounts owed by the Owner to the Contractor under the Construction Contract shall be used for the performance of the Construction Contract and to satisfy claims, if any, under any Construction Performance Bond. By the Contractor furnishing and the Owner accepting this Bond, they agree that all funds earned by the Contractor in the performance of the Construction Contract are dedicated to satisfy obligations of the Contractor and the Surety under this Bond, subject to the Owner's priority to use the funds for the completion of the work.
9. The Surety shall not be liable to the Owner, Claimants or others for obligations of the Contractor that are unrelated to the Construction Contract. The Owner shall not be liable for payment of any costs or expenses of any Claimant under this Bond, and shall have under this Bond no obligation to make payments to, give notices on behalf of, or otherwise have obligations to Claimants under this Bond.
10. The Surety hereby waives notice of any change, including changes of time, to the Construction Contract or to related sub-contracts, purchase orders and other obligations.
11. No suit or action shall be commenced by a Claimant under this Bond other than in a court of competent jurisdiction in the location in which the work or part of the work is located or after the expiration of one year from the date (1) on which the Claimant gave the notice required by Subparagraph 4.1 or Clause 4.2.3, or (2) on which the last labor or service was performed by anyone or the last materials or equipment were furnished by anyone under the Construction Contract, whichever of (1) or (2) first occurs. If the provisions of this Paragraph are void or prohibited by law, the minimum period of limitation available to sureties as a defense in the jurisdiction of the suit shall be applicable.
12. Notice to the Surety, the Owner or the Contractor shall be mailed or delivered to the address shown on the signature page. Actual receipt of notice by Surety, the Owner or the Contractor, however accomplished, shall be sufficient compliance as of the date received at the address shown on the signature page.
13. When this Bond has been furnished to comply with a statutory or other legal requirement in the location where the construction was to be performed, any provision in this Bond conflicting with said statutory or legal requirement shall be deemed deleted herefrom and provisions conforming to such statutory or other legal requirement shall be deemed incorporated herein. The intent is that this Bond shall be construed as a statutory bond and not as a common law bond.
14. Upon request by any person or entity appearing to be a potential beneficiary of this Bond, the Contractor shall promptly furnish a copy of this Bond or shall permit a copy to be made.
15. DEFINITIONS:
   15.1 Claimant: An individual or entity having a direct contract with the Contractor or with a subcontractor of the Contractor to furnish labor, materials or equipment for use in the performance of the Contract. The intent of this Bond shall be to include without limitation in the terms "labor, materials or equipment" that part of water, gas, power, light, heat, oil, gasoline, telephone service or rental equipment used in the Construction Contract, architectural and engineering services required for performance of the work of the Contractor and the Contractor's subcontractors, and all other items for which a mechanic's lien may be asserted in the jurisdiction where the labor, materials or equipment were furnished.
   15.2 Construction Contract: The agreement between the Owner and the Contractor identified on the signature page, including all Contract Documents and changes thereto.
   15.3 Owner Default: Failure of the Owner, which has neither been remedied nor waived, to pay the Contractor as required by the Construction Contract or to perform and complete or comply with the other terms thereof.

MODIFICATIONS TO THIS BOND ARE AS FOLLOWS:

_____
_____
_____
_____
_____
_____

(Space is provided below for additional signatures of added parties, other than those appearing on the cover page.)

CONTRACTOR AS PRINCIPAL (Corporate Seal)	SURETY (Corporate Seal)
Company: _____	Company: _____
_____	_____
_____	_____
Signature: _____	Signature: _____
Name and Title: _____	Name and Title: _____
Address: _____	Address: _____
_____	_____
_____	_____

IMPORTANT – Surety companies executing bonds much appear on the Treasury Department's most current list (Circular 570, as amended) and be authorized to transact business in the State of UTAH.

SECTION 00520 Bond Number:_____

PERFORMANCE BOND

CONTRACTOR (Name and Address):
_____
_____
_____

SURETY (Name and Principal Place of Business):
_____
_____
_____

OWNER (Name of Address):
_____
_____
_____

CONSTRUCTION CONTRACT
Date: _____
Amount: _____
Description (Name and Location): _____

BOND:
Date (Not earlier than Construction Contract Date): _____
Amount: _____

Modification to this Bond: ___ None ___ See Page 2

CONTRACTOR AS PRINCIPAL

Company: (Corporate Seal)
_____

Signature: _____

Name and Title: _____

SURETY

Company: (Corporate Seal)
_____

Signature: _____

Name and Title: _____

(Any additional signatures appear on Page 2)

(FOR INFORMATION ONLY -- Name, Address and Telephone)
AGENT or BROKER: _____
_____

OWNER'S REPRESENTATIVE (Architect, Engineer or other party): _____
_____

1. The Contractor and the Surety, jointly and severally, bind themselves, their heirs, executors, administrators, successors and assigns to the Owner for the performance of the Construction Contract, which is incorporated herein by reference.
2. If the Contractor performs the Construction Contract, the Surety and the Contractor shall have no obligation under this Bond, except to participate in conferences as provided in Subparagraph 3.1:
3. If there is no Owner Default, the Surety's obligation under this Bond shall arise after:
   3.1 The Owner has notified the Contractor and the Surety at its address described in Paragraph 10 below that the Owner is considering declaring a Contractor Default and has requested and attempted to arrange a conference with the Contractor and the Surety to be held not later than fifteen days after receipt of such notice to discuss methods of performing the Construction Contract. If the Owner, the Contractor and the Surety agree, the Contractor shall be allowed a reasonable time to perform the Construction Contract, but such an arrangement shall not waive the Owner's right, if any, subsequently to declare a Contractor Default; and
   3.2 The Owner has declared a Contractor Default and formally terminated the Contractor's right to complete the contract. Such Contractor Default shall not be declared earlier than twenty days after the Contractor and Surety have received notice as provided in Subparagraph 3.1; and
   3.3 The Owner has agreed to pay the Balance of the Contract Price to the Surety in accordance with the terms of the Construction Contract or to a contractor selected to perform the Construction Contract in accordance with the terms of the contract with the Owner.
4. When the Owner has satisfied the conditions of Paragraph 3, the Surety shall promptly and at the Surety's expense take one of the following actions:
   4.1 Arrange for the Contractor with consent of the Owner, to perform and complete the Construction Contract; or
   4.2 Undertake to perform and complete the Construction Contract itself, through its agents or through independent contractors; or
   4.3 Obtain bids or negotiate proposals from qualified contractors acceptable to the Owner for a contract for performance and completion of the Construction Contract, arrange for a contract to be prepared for execution by the Owner and the contractor selected with the Owner's concurrence, to be secured with performance and payment bonds executed by a qualified surety equivalent to the bonds issued on the Construction Contract, and pay to the Owner the amount of damages as described in Paragraph 6 in excess of the Balance of the Contract Price incurred by the Owner resulting from the Contractor's default; or

4.4 Waive its right to perform and complete, arrange for completion, or obtain a new contractor, and with reasonable promptness under the circumstances:

4.4.1 After investigation, determine the amount for which it may be liable to the Owner and, as soon as practicable after the amount is determined, tender payment therefor to the Owner; or

4.4.2 Deny liability in whole or in part and notify the Owner citing reasons therefor.

5. If the Surety does not proceed as provided in Paragraph 4 with reasonable promptness, the Surety shall be deemed to be in default on this Bond fifteen days after receipt of an additional written notice from the Owner to the Surety demanding that the Surety performs its obligations under this Bond, and the Owner shall be entitled to enforce any remedy available to the Owner. If the Surety proceeds as provided in Subparagraph 4.4, and the Owner refuses the payment tendered or the Surety has denied liability, in whole or in part, without further notice, the Owner shall be entitled to enforce any remedy available to the Owner.

6. After the Owner has terminated the Contractor's right to complete the Construction Contract, and if the Surety elects to act under Subparagraph 4.1, 4.2 or 4.3 above, then the responsibility of the Surety to the Owner shall not be greater than those of the Contractor under the Construction Contract, and the responsibilities of the Owner to the Surety shall not be greater than those of the Owner under the Construction Contract. To the limit of the amount of this Bond, but subject to commitment by the Owner of the Balance of the Contract Price to mitigation of costs and damages on the Construction Contract, the Surety is obligated without duplication for:

6.1 The responsibilities of the Contractor for correction of defective work and completion of the Construction Contract;

6.2 Additional legal design professional and delay costs resulting from the Contractor's Default, and resulting from the actions or failure to act of the Surety under Paragraph 4; and

6.3 Liquidated damages, or if no liquidated damages are specified in the Construction Contract, actual damages caused by delayed performance or non-performance of the Contractor.

7. The Surety shall not be liable to the Owner or others for obligations of the Contractor that are unrelated to the Construction Contract and the Balance of the Contract Price shall not be reduced or set off on account of any such unrelated obligations. No right of action shall accrue on this Bond to any person or entity other than the Owner or its heirs, executors, administrators or successors.

8. The Surety hereby waives notice of any change, including changes of time, to the Construction Contract or to related sub-contracts, purchase orders and other obligations.

9. Any proceeding, legal or equitable, under this Bond may be instituted in any court of competent jurisdiction in the location in which the work or part of the work is located and shall be instituted within two years after Contractor Default or within two years after the Contractor ceased working or within two years after the Surety refuses or fails to perform its obligations under this Bond, whichever occurs first. If the provisions of this Paragraph are void or prohibited by law, the minimum period of limitation available to sureties as a defense in the jurisdiction of the suit shall be applicable.

10. Notice to the Surety, the Owner or the Contractor shall be mailed or delivered to the address shown on the signature page.

11. When this Bond has been furnished to comply with a statutory or other legal requirement in the location where the construction was to be performed, any provision in this Bond conflicting with said statutory or legal requirement shall be deemed deleted herefrom and provisions conforming to such statutory or other legal requirement shall be deemed incorporated herein. The intent is that this Bond shall be construed as a statutory bond and not as a common law bond.

12. DEFINITIONS:

12.1 Balance of the Contact Price: The total amount payable by the Owner to the Contractor under the Construction Contract after all proper adjustments have been made, including allowance to the Contractor of any amounts received or to be received by the Owner in settlement of insurance or other claims for damages to which the Contractor is entitled, reduced by all valid and proper payments made to or on behalf of the Contractor under the Construction Contract.

12.2 Construction Contract: The agreement between the Owner and the Contractor identified on the signature page, including all Contract Documents and changes thereto.

12.3 Contractor Default: Failure of the Contractor, which has neither been remedied nor waived, to perform or otherwise to comply with the terms of the Construction Contract.

12.4 Owner Default: Failure of the Owner, which has neither been remedied nor waived, to pay the Contractor as required by the Construction Contract or to perform and complete or comply with the other terms thereof.

MODIFICATIONS TO THIS BOND ARE AS FOLLOWS:

_____
_____
_____
_____
_____
_____

(Space is provided below for additional signatures of added parties, other than those appearing on the cover page.)

CONTRACTOR AS PRINCIPAL (Corporate Seal)	SURETY (Corporate Seal)
Company: _____	Company: _____
_____	_____
_____	_____
Signature: _____	Signature: _____
Name and Title: _____	Name and Title: _____
Address: _____	Address: _____
_____	_____

SECTION 00530

NOTICE OF AWARD

TO:

PROJECT DESCRIPTION:

The OWNER has considered the BID submitted by you for the above-described WORK in response to its INVITATION TO BID, dated _____, and INSTRUCTIONS TO BIDDERS.

You are hereby notified that your BID has been accepted for the WORK in the amount of $_____.

You are required by the INSTRUCTIONS TO BIDDERS to execute the AGREEMENT and furnish the required CONTRACTORS PERFORMANCE BOND, PAYMENT BOND and certificates of insurance within ten (10) calendar days from the date of this Notice to you.

If you fail to execute said AGREEMENT and to furnish said BONDS within ten (10) days from the date of this Notice, said OWNER will be entitled to consider all your rights arising out of the OWNERS acceptance of your BID as abandoned and as a forfeiture of your BID BOND. The OWNER will be entitled to such other rights as may be granted by law.

You are required to return an acknowledged copy of this NOTICE OF AWARD to the OWNER.

Dated this ___ day of _____, 20__,

_____

BY: _____

TITLE:_____

ACCEPTANCE OF NOTICE

Receipt of the above NOTICE OF AWARD is hereby acknowledged by _____.
on this _____ day of _____, 20__.

_____

BY: _____

TITLE: _____

SECTION 00540

NOTICE TO PROCEED

TO:

PROJECT DESCRIPTION:

You are hereby notified to commence WORK on this PROJECT in accordance with the AGREEMENT, dated _____, 20____, on or before _____, 20____; and you are to fully complete the WORK within _____90_____ calendar days thereafter. The date of completion of all WORK is therefore _____, 20____.

Receipt of the above NOTICE TO PROCEED is hereby acknowledged on this _____ day of _____, 20___.

_____

BY: _____

TITLE: _____

- -

ACCEPTANCE OF NOTICE

Receipt of the above NOTICE TO PROCEED is hereby acknowledged on this _____ day of _____, 20___.

BY: _____

TITLE: _____

SECTION 00560

DATE

CHANGE ORDER NO.

PROJECT:

CONTRACTOR:

You are hereby requested to comply with the following changes from the contract plans and specifications.

Item No. (1)	DESCRIPTION OF CHANGES: quantities, units, prices, schedule, etc. (2)	Decrease (3)	Increase (4)
	Total of Decreases:		
	Total of Increases:		
	Net contract change		

The sum of $ is added to the total contract price. The total adjusted contract price to date is $

This document shall become an amendment to the contract and all provisions of the contract will apply hereby.

Accepted by Contractor:

Date:

Contractor

Recommended by Inspector:

Date:

Inspector

Recommended by Engineer:

Date:

GILSON ENGINEERING, INC.

Approved by Owner:

Date:

City/Client

SECTION 00570
CERTIFICATE OF SUBSTANTIAL COMPLETION

PROJECT:

DATE OF ISSUANCE:

OWNER:

ENGINEER: Gilson Engineering, Inc.
12401 South 450 East C2
Draper, Utah 84020

Contract Nº:

CONTRACTOR:

CONTRACT FOR:

CONTRACT DATE:

This Certificate of Substantial Completion applies to all Work under the Contract Documents or the following parts thereof:

PER SPECIFICATIONS

To:_____
Owner

And To_____
Contractor

The Work to which this Certificate applies has been inspected by authorized representatives of OWNER, CONTRACTOR AND ENGINEER, and that Work is hereby declared to be substantially complete in accordance with the Contract Documents on:

_____
DATE OF SUBSTANTIAL COMPLETION

A tentative list of items to be completed or corrected is attached hereto. This list may not be all-inclusive, and the failure to include an item in it does not alter the responsibility of CONTRACTOR to complete all the Work in accordance with the Contract documents. The items in the tentative list shall be completed or corrected by the CONTRACTOR within ***30*** days of the above date of Substantial Completion.

The responsibilities between OWNER and CONTRACTOR for security, operation, safety, maintenance, heat, utilities, insurance and warranties shall be as follows:

RESPONSIBILITIES

OWNER: SECURITY, OPERATION, MAINTENANCE, HEAT, UTILITIES, AND INSURANCE

CONTRACTOR: INSURANCE, WARRANTY, AND SAFETY .

The following work must be completed:

This certificate does not constitute an acceptance of Work not in accordance with the contract documents nor is it a release of Contractor's obligation to complete the work in accordance with the contract documents.

Executed by the ENGINEER on _____

Gilson Engineering, Inc.
ENGINEER

By _____

CONTRACTOR accepts this certificate of Substantial Completion on _____, 20 .

_____
CONTRACTOR

By _____

OWNER accepts this certificate of Substantial Completion on _____, 20 .

_____
OWNER

By _____

SECTION 00580
NOTICE OF COMPLETION
DATE:

PROJECT:

TO:

CONTRACTOR:

You are hearby notified, in accordance with the Contract Documents including all changes and amendments, and no outstanding claims exist, that the WORK on this project is complete.

_____
OWNER

By _____

Date _____

Receipt of the above NOTICE OF COMPLETION if hereby acknowledged on

this _____ day of _____,21____.

_____
CONTRACTOR

By _____

Date _____

SECTION 00700

GENERAL CONDITIONS

TABLE OF CONTENTS

Article Number	Title	Page
1.	DEFINITIONS AND TERMINOLOGY	
	A. Definitions	4
	B. Terminology	6
2.	PRELIMINARY MATTERS	
	A. Delivery of Bonds and Evidence of Insurance	7
	B. Copies of Documents	7
	C. Commencements of Contract Time; Notice to Proceed	7
	D. Starting the Project	7
	E. Time for Completion and Liquidated Damages	8
	F. Before Starting Construction	8
	G. Preconstruction Conference	8
	H. Finalizing Schedules	8
	I. Progress Meetings	9
3.	CONTRACT DOCUMENTS: INTENT, AMENDING, REUSE	
	A. Intent	9
	B. Reference Standards	9
	C. Reporting and Resolving Discrepancies	9
	D. Amending and Supplementing Contract Documents	10
	E. Reuse of Documents	10
	F. Electronic Data	10
4.	AVAILABILITY OF LANDS; SUBSURFACE AND PHYSICAL CONDITIONS; HAZARDOUS ENVIRONMENTAL CONDITONS; REFERENCE POINTS	
	A. Availability of Lands	11
	B. Subsurface and Physical Conditions	11
	C. Differing Subsurface or Physical Conditions	11
	D. Underground Facilities	12
	E. Reference Points	13
	F. Hazardous Environmental Condition at Site	13
5.	BONDS AND INSURANCE	
	A. Performance, Payment and Other Bonds	14
	B. Licensed Sureties and Insurers	15
	C. Certificates of Insurance	15
	D. Contractor's Liability Insurance	15
	E. Owner's Liability Insurance	16
	F. Property Insurance	16
	G. Waiver of Rights	17
	H. Receipt and Application of Insurance Proceeds	17
	I. Acceptance of Bonds and Insurance; Option to Replace	17
	J. Partial Utilization, Acknowledgment of Property Insurer	18
6.	CONTRACTOR'S RESPONSIBILITIES	
	A. Supervision and Superintendence	18
	B. Labor; Working Hours	18
	C. Services, Materials, and Equipment	18
	D. Progress Schedule	18
	E. Substitutes and "Or-Equals"	19
	F. Concerning Subcontractors, Suppliers, and Others	20
	G. Patent Fees and Royalties	21
	H. Permits	21
	I. Laws and Regulations	21
	J. Taxes	21
	K. Use of Site and Other Areas	21
	L. Record Documents	22
	M. Safety and Protection	22

Article Number	Title	Page
	N. Safety Representative	22
	O. Hazard Communication Programs	23
	P. Emergencies	23
	Q. Shop Drawings and Samples	23
	R. Continuing the Work	24
	S. Contractor's General Warranty and Guarantee	24
	T. Indemnification	25
	U. Delegation of Professional Design Services	25
7.	OTHER WORK AT THE SITE	
	A. Related Work at Site	26
	B. Coordination	26
	C. Legal Relationships	26
8.	OWNER'S RESPONSIBILITIES	
	A. Communication to Contractor	26
	B. Replacement of Engineer	27
	C. Furnish Data	27
	D. Pay When Due	27
	E. Lands and Easements; Reports and Tests	27
	F. Insurance	27
	G. Change Orders	27
	H. Inspections, Tests and Approvals	27
	I. Limitations on Owner's Responsibilities	27
	J. Undisclosed Hazardous Environmental Condition	27
	K. Evidence of Financial Arrangements	27
9.	ENGINEER'S STATUS DURING CONSTRUCTION	
	A. Owner's Representative	28
	B. Visits to Site	28
	C. Project Representative	28
	D. Authorized Variations in Work	28
	E. Rejecting Defective Work	28
	F. Shop Drawings, Change Orders and Payments	28
	G. Determination of Unit Price Work	29
	H. Decisions on Requirements of Contract Documents and Acceptability of Work	29
	I. Limitations on Engineer's Authority and Responsibilities	29
10.	CHANGES IN THE WORK; CLAIMS	
	A. Authorized Changes in the Work	30
	B. Unauthorized Changes in the Work	30
	C. Execution of Change Orders	30
	D. Notification to Surety	30
	E. Claims	30
11.	COST OF THE WORK; ALLOWANCES; UNIT PRICE WORK	
	A. Cost of the Work	31
	B. Allowances	32
	C. Unit Price Work	33
12.	CHANGE OF CONTRACT PRICE; CHANGE OF CONTRACT TIME	
	A. Change of Contract Price	33
	B. Change of Contract Times	34
	C. Delays	34
13.	TESTS AND INSPECTIONS; CORRECTION, REMOVAL OR ACCEPTANCE OF DEFECTIVE WORK	
	A. Notice of Defects	34
	B. Access to Work	34
	C. Tests and Inspections	35
	D. Uncovering Work	35
	E. Owner May Stop the Work	35
	F. Correction or Removal of Defective Work	36
	G. Correction Period	36

Article Number	Title	Page
	H. Acceptance of Defective Work	36
	I. Owner May Correct Defective Work	37
14.	PAYMENTS TO CONTRACTOR AND COMPLETION	
	A. Schedule of Values	37
	B. Progress Payments	37
	C. Contractor's Warranty of Title	39
	D. Substantial Completion	39
	E. Partial Utilization	39
	F. Final Inspection	40
	G. Final Payment	40
	H. Final Completion Delayed	40
	I. Waiver of Claims	41
15.	SUSPENSION OF WORK AND TERMINATION	
	A. Owner May Suspend Work	41
	B. Owner May Terminate For Cause	41
	C. Owner May Terminate For Convenience	42
	D. Contractor May Stop Work or Terminate	42
16.	DISPUTE RESOLUTION	
	A. Methods and Procedures	42
17.	MISCELLANEOUS	
	A. Giving Notice	43
	B. Computation of Times	43
	C. Cumulative Remedies	43
	D. Survival of Obligations	43
	E. Controlling Law	43
	F. Headings	43

SECTION 00700

GENERAL CONDITIONS

ARTICLE 1 — DEFINITIONS AND TERMINOLOGY

A. DEFINITIONS. Wherever used in these GENERAL CONDITIONS or in the other CONTRACT DOCUMENTS, the terms listed below will have the meanings indicated, which are applicable to both the singular and plural thereof:

1.1. ADDENDA -- Written or graphic instruments issued prior to the opening of BIDS which clarify, correct or change the BIDDING requirements or the CONTRACT DOCUMENTS, including SPECIFICATIONS and DRAWINGS.

1.2. AGREEMENT -- The written agreement between the OWNER and CONTRACTOR covering the WORK to be performed; other CONTRACT DOCUMENTS are attached to the AGREEMENT and made a part thereof as provided therein.

1.3. APPLICATION FOR PAYMENT -- Form accepted by the ENGINEER which is to be used by the CONTRACTOR in requesting progress or final payments; and which is to be accompanied by such supporting documentation as is required by the CONTRACT DOCUMENTS.

1.4. ASBESTOS -- Any material that contains more than one percent asbestos and is friable or is releasing asbestos fibers into the air above current action levels established by the United States Occupational Safety and Health Administration.

1.5. BID -- Offer or proposal of BIDDER submitted on the prescribed form setting forth prices for the WORK to be performed.

1.6. BIDDER -- Any person, firm or corporation submitting a BID for the WORK.

1.7. BIDDING DOCUMENTS -- The Invitation to Bid, Instructions to Bidders, Additional Invitation to Bidders, the BID form, and the proposed CONTRACT DOCUMENTS (including all ADDENDA issued prior to receipt of BIDS).

1.8. BIDDING REQUIREMENTS -- Invitation to Bid, Instructions to Bidders, Additional Instructions to Bidders and the BID form.

1.9. BONDS -- Bid, Performance and Payment Bonds and other instruments of security; furnished by the CONTRACTOR and his surety in accordance with the CONTRACT DOCUMENTS.

1.10. CHANGE ORDER -- A document recommended by the ENGINEER, which is signed by the CONTRACTOR and OWNER and authorizes an addition, deletion or revision in the WORK, or an adjustment in the CONTRACT PRICE or CONTRACT TIME, issued on or after the Effective Date of the AGREEMENT.

1.11. CONTRACT DOCUMENTS -- The AGREEMENT, ADDENDA (which pertain to the CONTRACT DOCUMENTS), CONTRACTOR's BID (including documentation accompanying the BID and any post-Bid documentation submitted prior to the NOTICE OF AWARD) when attached as an exhibit to the AGREEMENT, the BONDS, the NOTICE TO PROCEED, these GENERAL CONDITIONS, the SUPPLEMENTAL GENERAL CONDITIONS, the SPECIFICATIONS and the DRAWINGS, the same are more specifically identified in the AGREEMENT, together with all Written Amendments, Change Orders, Work Change Directives, Field Orders and ENGINEER's written interpretations and clarifications issued pursuant to paragraphs 3.5, 3.6.1, and 3.6.3 on or after the Effective Date of the AGREEMENT.

1.11.1. Shop Drawing submittals approved pursuant to paragraphs 6.26 and 6.27 and the reports and drawings referred to in paragraph 4.2.1 are not CONTRACT DOCUMENTS.

1.12. CONTRACT PRICE -- The moneys payable by the OWNER to the CONTRACTOR for completion of the WORK in accordance with the CONTRACT DOCUMENTS as stated in the AGREEMENT (subject to the provisions of paragraph 11.9.1 in the case of Unit Price Work).

1.13. CONTRACT TIMES -- The number of days (computed as provided in paragraph 17.2) or the dates stated in the AGREEMENT: (i) to achieve Substantial Completion, and (ii) to complete the WORK so that it is ready for final payment as evidenced by the ENGINEER's written recommendation of final payment in accordance with paragraph 14.13.

1.14. CONTRACTOR -- The person, firm or corporation with whom the OWNER has entered into the Agreement.

1.15. DEFECTIVE -- An adjective which when modifying the word WORK refers to the WORK that is unsatisfactory, faulty of deficient, in that it does not conform to the CONTRACT DOCUMENTS; or does not meet the requirements of any inspection, reference standard, test or approval referred to in the CONTRACT DOCUMENTS; or has been damaged prior to the ENGINEER's recommendation of final payment (unless responsibility for the protection thereof has been assumed by the OWNER at Substantial Completion in accordance with paragraph 14.8 or 14.10)

1.16. DRAWINGS -- Drawings which show scope, extent and character of the WORK to be furnished and performed by the CONTRACTOR; and which have been prepared or approved by the ENGINEER and referred to in the CONTRACT DOCUMENTS.

1.16.1. Shop drawings are not Drawings as so defined.

1.17. EFFECTIVE DATE OF THE AGREEMENT -- Date indicated in the AGREEMENT on which it becomes effective, but if no such date is indicated it means the date on which the AGREEMENT is signed and delivered by the last of the two parties to sign and deliver.

1.18. ENGINEER -- The person, firm or corporation named as such in the AGREEMENT.

1.19. ENGINEER'S CONSULTANT -- A person, firm or corporation having a contract with the ENGINEER to furnish services as the ENGINEER's independent professional associate or consultant with respect to the Project and who is identified as such in the Supplementary Conditions.

1.20. FIELD ORDER -- A written order issued by the ENGINEER which orders minor changes in the WORK in accordance with paragraph 9.5, but which does not involve a change in CONTRACT PRICE or CONTRACT TIME.

1.21. GENERAL REQUIREMENTS -- Section 00600 of the Specifications.

1.22. HAZARDOUS WASTE -- The term Hazardous Waste shall have the meaning provided in Section 1004 of the Solid Waste Disposal Act (42 USC Section 6903) as amended from time to time.

1.23. INSPECTOR -- The authorized representative of the OWNER or ENGINEER who is assigned to observe the work on the PROJECT.

1.24. LAWS AND REGULATIONS; LAWS OR REGULATIONS -- Any and all applicable laws, rules, regulations, ordinances, codes and orders of any and all governmental bodies, agencies, authorities and courts having jurisdiction.

1.25. LIENS -- Liens, charges, security interests or encumbrances upon real property or personal property.

1.26. MILESTONES -- A principal event specified in the Contract Documents relating to an intermediate completion date or time prior to Substantial Completion of all the Work.

1.27. NOTICE OF AWARD -- The written notice by the OWNER to the apparent successful BIDDER stating that upon compliance by the apparent successful BIDDER with the conditions precedent enumerated therein, within the time specified, the OWNER will sign and deliver the AGREEMENT.

1.28. NOTICE TO PROCEED -- A written notice given by the OWNER to the CONTRACTOR (with a copy to the ENGINEER) fixing the date on which the CONTRACT TIME will commence to run and on which the CONTRACTOR shall start to perform the CONTRACTOR's obligations under the CONTRACT DOCUMENTS.

1.29. NOTICE OF SUBSTANTIAL COMPLETION -- A written notice from the OWNER to the CONTRACTOR that the WORK on the PROJECT is substantially complete.

1.30. NOTICE OF COMPLETION -- A written notice from the OWNER to the CONTRACTOR that the WORK on the PROJECT is complete.

1.31. OWNER -- The public body or authority, corporation, association, firm or person with whom the CONTRACTOR has entered into the AGREEMENT and for whom the WORK is to be provided.

1.32. PARTIAL UTILIZATION -- Use by the OWNER of a substantially completed part of the WORK for the purpose for which it is intended (or a related purpose) prior to SUBSTANTIAL COMPLETION of all the WORK.

1.33. PCBs – Polychlorinated biphenyls.

1.34. PETROLEUM -- Petroleum, including crude oil or any fraction thereof which is liquid at standard conditions of temperature and pressure (60 degrees Fahrenheit and 14.7 pounds per square inch absolute), such as oil, petroleum, fuel oil, oil sludge, oil refuse, gasoline, kerosene, and oil mixed with other non-Hazardous Wastes and crude oils.

1.35. PROJECT -- The total construction of which the WORK to be provided under the CONTRACT DOCUMENTS may be the whole, or a part as indicated elsewhere in the CONTRACT DOCUMENTS.

1.36. RADIOACTIVE MATERIAL -- Source, special nuclear, or by-product material as defined by the Atomic Energy Act of 1954

(42 USC Section 2011 et seq.) as amended from time to time.

1.37. RESIDENT PROJECT REPRESENTATIVE -- The authorized representative of the OWNER or ENGINEER who may be assigned to the site or any part thereof.

1.38. SAMPLES -- Physical examples of materials, equipment, or workmanship that are representative of some portion of the WORK and which establish the standards by which such portion of the WORK will be judged.

1.39. SHOP DRAWINGS -- All drawings, diagrams, illustrations, schedules and other data or information which are specifically prepared or assembled by or for the CONTRACTOR and submitted by the CONTRACTOR to illustrate how specific portions of the WORK shall be fabricated or installed.

1.40. SPECIFICATIONS -- Those portions of the CONTRACT DOCUMENTS consisting of written technical descriptions of materials, equipment, construction systems, standards and workmanship as applied to the WORK and certain administrative details applicable thereto.

1.41. SUBCONTRACTOR -- An individual, firm or corporation having a direct contract with the CONTRACTOR or with any other SUBCONTRACTOR for the performance of a part of the WORK at the site.

1.42. SUBSTANTIAL COMPLETION -- The WORK (or a specified part thereof) has progressed to the point where, in the opinion of ENGINEER, as evidenced by the ENGINEER's definitive certificate of SUBSTANTIAL COMPLETION, it is sufficiently complete, in accordance with the CONTRACT DOCUMENTS, so that the WORK (or specified part) can be utilized for the purposes for which it is intended; or if no such certificate is issued, when the WORK is complete and ready for final payment as evidenced by the ENGINEER’s written recommendation of final payment in accordance with paragraph 14.13. The terms "substantially complete" and "substantially completed" as applied to all or part of the WORK refer to SUBSTANTIAL COMPLETION thereof.

1.43. SUPPLEMENTAL GENERAL CONDITIONS -- The part of the CONTRACT DOCUMENTS which amends or supplements these GENERAL CONDITIONS.

1.44. SUPPLIER -- A manufacturer, fabricator, supplier, distributor, material man or vendor having a direct contract with the CONTRACTOR or with any Subcontractor to furnish materials or equipment to be incorporated in the WORK by the CONTRACTOR or any Subcontractor.

1.45. UNDERGROUND FACILITIES -- All pipelines, conduits, ducts, cables, wires, manholes, vaults, tanks, tunnels or other such facilities or attachments, and any encasements containing such facilities which have been installed underground to furnish any of the following services or materials: electricity, gases, steam, liquid petroleum products, telephone or other communications, cable television, sewage and drainage removal, traffic or other control systems or water.

1.46. UNIT PRICE WORK -- WORK to be paid for on the basis of unit prices.

1.47. WORK - The entire completed construction or the various separately identifiable parts thereof required to be furnished under the CONTRACT DOCUMENTS. The WORK includes and is the result of performing or furnishing labor and furnishing and incorporating materials and equipment into the construction, and performing or furnishing services and furnishing documents, all as required by the CONTRACT DOCUMENTS.

1.48. WORK CHANGE DIRECTIVE -- A written directive to the CONTRACTOR, issued on or after the Effective Date of the AGREEMENT and signed by the OWNER and recommended by the ENGINEER, ordering an addition, deletion or revision in the WORK, or responding to differing or unforeseen physical conditions under which the WORK is to be performed as provided in paragraph 4.2 or 4.3 or to emergencies under paragraph 6.23. A WORK CHANGE DIRECTIVE may not change the CONTRACT PRICE or the CONTRACT TIME, but is evidence that the parties expect that the change directed or documented by a WORK CHANGE DIRECTIVE will be incorporated in a subsequently issued CHANGE ORDER following negotiations by the parties as to its effect, if any, on the CONTRACT PRICE or CONTRACT TIME, as provided in paragraph 10.2.

1.49. WRITTEN AMENDMENT -- A written amendment of the CONTRACT DOCUMENTS, signed by the OWNER and CONTRACTOR on or after the Effective Date of the AGREEMENT and normally dealing with the non-engineering or non-technical rather than strictly construction-related aspects of the CONTRACT DOCUMENTS.

1.50. WRITTEN NOTICE -- A written notice to any party of the AGREEMENT relative to any part of this AGREEMENT, in writing and considered delivered and the service thereof completed, when posted by certified or registered mail to the said party at his last given address, or delivered in person to said party or his authorized representative on the WORK.

B. TERMINOLOGY.

1.51. INTENT OF CERTAIN TERMS OR ADJECTIVES -- The Contract Documents include the terms “as allowed”, “as approved”, “as ordered”, “as directed”, or terms of like effect or import to authorize an exercise of professional judgment by the ENGINEER. In addition, the adjectives “reasonable”, “suitable”, “acceptable”, “proper”, “satisfactory”, or adjectives of like effect or import are used to describe an action or determination of the ENGINEER as to the Work. It is intended that such exercise of

profession judgment, action or determination will be solely to evaluate, in general, the Work for compliance with the requirements of and information in the Contract Documents and conformance with the design concept of the completed Project as a functioning whole as shown or indicated in the Contract Documents (unless there is a specific statement indicating otherwise). The use of any such term or adjective is not intended to and shall not be effective to assign to the ENGINEER any duty or authority to supervise or

direct the performance of the Work, or any duty or authority to undertake responsibility contrary to the provisions of Paragraph 9.13 or any other provisions of the Contract Documents.

1.52. DAY -- The word “day” means a calendar day of 24 hours measured from midnight to the next midnight.

1.53. DEFECTIVE -- The word “defective”, when modifying the word “Work”, refers to Work that is unsatisfactory, faulty, or deficient in that it:

1.53.1. does not conform to the Contract Documents; or

1.53.2. does not meet the requirements of any applicable inspection, reference standard, test, or approved referred to in the Contract Documents; or

1.53.3. has been damaged prior to the ENGINEER’s recommendation of final payment (unless responsibility for the protection thereof has been assumed by the OWNER at Substantial Completion in accordance with Paragraphs 14.9 and 14.10).

1.54. FURNISH, INSTALL, PERFORM, PROVIDE.

1.54.1. The word “furnish”, when used in connection with services, materials, or equipment, shall mean to supply and deliver said services, materials, or equipment to the Site (or some other specified location) ready for use or installation, and in usable or operable condition.

1.54.2. The word “install”, when used in connection with services, materials, or equipment, shall mean to put into use or place in final position said services, materials, or equipment complete and ready for intended use.

1.54.3. The words “perform” or “provide”, when used in connection with services, materials, or equipment, shall mean to furnish and install said services, materials, or equipment complete and ready for intended use.

1.54.4. When “furnish”, “install”, “perform”, or “provide” is not used in connection with services, materials, or equipment in a context clearly requiring an obligation of the CONTRACTOR, “provide” is implied.

1.55. Unless stated otherwise in the Contract Documents, words or phrases which have a well-known technical or construction industry or trade meaning are used in the Contract Documents in accordance with such recognized meaning.

ARTICLE 2 --- PRELIMINARY MATTERS.

A. DELIVERY OF BONDS AND EVIDENCE OF INSURANCE:

2.01.1. When the CONTRACTOR delivers executed counterparts of the AGREEMENT to the OWNER, the CONTRACTOR shall also deliver to the OWNER such BONDS as CONTRACTOR may be required to furnish in accordance with paragraph 5.1.

2.01.2. Before any Work at the Site is started, the CONTRACTOR and OWNER shall each deliver to the other, with copies to each additional insured indentified in the Supplemental General Conditions, certificates of insurance (and other evidence of insurance which either of them or any additional insured may reasonably request) which the CONTRACTOR and OWNER respectively are required to purchase and maintain in accordance with Article 5.

B. COPIES OF DOCUMENTS:

2.02. The OWNER shall furnish to the CONTRACTOR two copies of the CONTRACT DOCUMENTS (unless otherwise specified in the SUPPLEMENTAL GENERAL CONDITIONS) as are necessary for the execution of the WORK. Additional copies will be furnished, upon request, at the cost of reproduction.

C. COMMENCEMENT OF CONTRACT TIME; NOTICE TO PROCEED:

2.03. The CONTRACT TIME will commence to run on the day indicated in the NOTICE TO PROCEED. A NOTICE TO PROCEED may be given at any time within thirty days after the Effective Date of the AGREEMENT. In no event will the CONTRACT TIME commence to run later than the sixty days after the day of the BID opening or the thirtieth day after the Effective Date of the AGREEMENT, whichever date is earlier.

D. STARTING THE PROJECT:

2.04. The CONTRACTOR shall start to perform the WORK on the date when the CONTRACT TIME commences to run, but no WORK shall be done at the site prior to the date on which the CONTRACT TIME commences to run.

E. TIME FOR COMPLETION AND LIQUIDATED DAMAGES:

2.05.1. The date of beginning and the time for completion of the WORK are essential conditions of the CONTRACT DOCUMENTS and the WORK embraced shall be commenced on a date specified in the NOTICE TO PROCEED.

2.05.2. The CONTRACTOR will proceed with the WORK at such rate of progress to insure full completion within the CONTRACT TIME. It is expressly understood and agreed, by and between the CONTRACTOR and the OWNER, that the

CONTRACT TIME for the completion of the WORK described herein is a reasonable time, taking into consideration the average climatic and economic conditions and other factors prevailing in the locality of the WORK.

2.05.3. If the CONTRACTOR shall fail to complete the WORK within the CONTRACT TIME, or extension of time granted by the OWNER, then the contractor will pay to the OWNER the amount for liquidated damages as specified in the BID for each calendar day that the CONTRACTOR shall be in default after the time stipulated in the CONTRACT DOCUMENTS.

2.05.4. The CONTRACTOR shall not be charged with liquidated damages or any excess cost when the delay in completion of the WORK is due to the following and the CONTRACTOR has promptly given WRITTEN NOTICE of such delay to the OWNER or ENGINEER.

a. To any preference, priority or allocation order duly issued by the OWNER.

b. To unforeseeable causes beyond the control and without the fault or negligence of the CONTRACTOR, including but not restricted to, acts of God or of the public enemy, acts of the OWNER, acts of other CONTRACTOR in the performance of a contract with the OWNER, fires, floods, epidemics, quarantine restrictions, strikes, freight embargoes, and abnormal and unforeseeable weather; and

c. To any delays of SUBCONTRACTORS occasioned by any of the causes specified in paragraphs 2.8.1 and 2.8.2 of this article.

F. BEFORE STARTING CONSTRUCTION:

2.06.1. Before undertaking each part of the WORK, the CONTRACTOR shall carefully study and compare the CONTRACT DOCUMENTS and check and verify pertinent figures shown thereon and all applicable field measurements. The CONTRACTOR shall promptly report in writing to the ENGINEER any conflict, error, ambiguity or discrepancy which the CONTRACTOR may discover and shall obtain a written interpretation or clarification from the ENGINEER before proceeding with any WORK affected thereby; however, the CONTRACTOR shall not be liable to the OWNER or ENGINEER for failure to report any conflict, error, ambiguity or discrepancy in the CONTRACT DOCUMENTS, unless the CONTRACTOR knew or reasonably should have known thereof.

2.06.2. Within ten days after the Effective Date of the AGREEMENT (unless otherwise specified in the General Requirements), the CONTRACTOR shall submit to the ENGINEER for review:

a. a preliminary progress schedule indicating the times (numbers of days or dates) for starting and completing the various stages of the WORK, including any Milestones specified in the CONTRACT DOCUMENTS;

b. a preliminary schedule of SHOP DRAWING and Sample submittals which will list each required submittal and the times for submitting, reviewing and processing such submittal;

c. a preliminary schedule of values for all of the WORK which will include quantities and prices of items aggregating the CONTRACT PRICE and will subdivide the WORK into component parts in sufficient detail to serve as the basis for progress payments during construction. Such prices will include an appropriate amount of overhead and profit applicable to each item of the WORK.

G. PRECONSTRUCTION CONFERENCE:

2.07. Within twenty days after the Effective Date of the AGREEMENT, but before the CONTRACTOR starts the WORK at the site, a conference attended by the CONTRACTOR, ENGINEER, OWNER and others as appropriate will be held to establish a working understanding among the parties as to the WORK; and to discuss the schedules referred to in paragraph 2.6, procedures for handling SHOP DRAWINGS and other submittals, and for processing APPLICATIONS FOR PAYMENT, and maintaining

required records. The preconstruction conference shall be as described in Section 01300, ADMINISTRATIVE REQUIREMENTS.

H. FINALIZING SCHEDULES:

2.08. Unless otherwise provided in the CONTRACT DOCUMENTS, at least ten days before submission of the first APPLICATION FOR PAYMENT a conference attended by the CONTRACTOR, ENGINEER and others as appropriate will be held to review for acceptability to the ENGINEER as provided below the schedules submitted in accordance with paragraph 2.6 and Section 01300. The CONTRACTOR shall have an additional ten days to make corrections and adjustments and to complete and re-submit the schedules. No progress payment shall be made to the CONTRACTOR until the schedules are submitted to and acceptable to the ENGINEER, as provided below. The progress schedule will be acceptable to the ENGINEER as providing an orderly progression of the WORK to completion within any specified Milestones and the CONTRACT TIME, but such acceptance will neither impose on the ENGINEER responsibility for the sequencing, scheduling or progress of the WORK nor interfere with or relieve the CONTRACTOR from the CONTRACTOR's full responsibility therefore. The CONTRACTOR's schedule of SHOP DRAWING and Sample submissions will be acceptable to the ENGINEER as providing a workable arrangement for reviewing and processing the required submissions. The CONTRACTOR's schedule of values will be acceptable to the ENGINEER as to form and substance.

I. PROGRESS MEETINGS:

2.09. Progress meeting shall be scheduled by the CONTRACTOR as described in Section 01300.

ARTICLE 3 --- CONTRACT DOCUMENTS: INTENT, AMENDING, REUSE.

A. INTENT:

3.01.1. The CONTRACT DOCUMENTS comprise the entire agreement between the OWNER and the CONTRACTOR concerning the WORK. The CONTRACT DOCUMENTS are complementary; what is called for by one is as binding as if called for by all. The CONTRACT DOCUMENTS will be construed in accordance with the law of the place of the Project.

3.01.2. It is the intent of the CONTRACT DOCUMENTS (including technical specifications and project drawings) to describe a functionally complete PROJECT (or part thereof) to be constructed in accordance with the CONTRACT DOCUMENTS. Any WORK, materials or equipment that may reasonably be inferred from the CONTRACT DOCUMENTS or from prevailing custom or trade usage as being required to produce the intended result will be furnished and performed whether or not specifically called for, at no additional cost to the OWNER. When words or phrases which have a well-known technical or construction industry or trade meaning are used to describe the WORK, materials or equipment, such words or phrases shall be interpreted in accordance with that meaning.

3.01.3. Clarifications and interpretations of the CONTRACT DOCUMENTS shall be issued by the ENGINEER as provided in Article 9.

B. REFERENCE STANDARDS

3.02. Standards, Specifications, Codes, Laws, and Regulations.

3.02.1. Reference to standards, specifications, manuals or codes of any technical society, organization or association, or to the LAWS or REGULATIONS of any governmental authority, whether such reference be specific or by implication, shall mean the latest standard, specification, manual, code or LAWS or REGULATIONS in effect at the time of the opening of BIDS (or, on the Effective Date of the AGREEMENT if there were no BIDS); except as may be otherwise specifically stated in the CONTRACT DOCUMENTS.

3.02.2. No provision of any such standard, specification, manual, code or any instruction of a Supplier shall be effective to change the duties and responsibilities of the OWNER, CONTRACTOR or ENGINEER, or any of their subcontractors, consultants, agents or employees from those set forth in the CONTRACT DOCUMENTS. No such provision or instruction shall be effective to assign to the OWNER, ENGINEER, or any of their related consultants, agents or employees, any duty or authority to supervise or direct the performance of the WORK, or any duty or authority to undertake responsibility inconsistent with the provisions of the CONTRACT DOCUMENTS.

C. REPORTING AND RESOLVING DISCREPANCIES

3.03.1 Reporting Discrepancies.

a. Contractor's Review of Contract Documents Before Starting Work: Before undertaking each part of the Work, the CONTRACTOR shall carefully study and compare the CONTRACT DOCUMENTS and check and verify pertinent figures therein and all applicable field measurements. The CONTRACTOR shall promptly report in writing to the ENGINEER any conflict, error,

ambiguity, or discrepancy which the CONTRACTOR may discover and shall obtain a written interpretation or clarification from the ENGINEER before proceeding with any WORK affected thereby.

b. Contractor's Review of Contract Documents During Performance of Work: If, during the performance of the WORK, the CONTRACTOR discovers a conflict, error, ambiguity or discrepancy within the CONTRACT DOCUMENTS or between the CONTRACT DOCUMENTS and any provision of any such Law or Regulation applicable to the performance of the WORK or of any standard, specification, manual or code or of any instruction of any Supplier, the CONTRACTOR shall promptly report it to the ENGINEER in writing. The CONTRACTOR shall not proceed with the WORK affected thereby (except in an emergency as required by Article 6) until an amendment or supplement to the CONTRACT DOCUMENTS has been issued by one of the methods indicated in Article 3.

c. The CONTRACTOR shall not be liable to the OWNER or ENGINEER for failure to report any conflict, error, ambiguity or discrepancy in the CONTRACT DOCUMENTS unless the CONTRACTOR knew or reasonably should have known thereof.

3.03.2. Resolving Discrepancies.

a. Except as otherwise specifically stated in the CONTRACT DOCUMENTS or as may be provided by amendment or supplement thereto issued by one of the methods indicated in Article 3, the provisions of the CONTRACT DOCUMENTS shall take precedence in resolving any conflict, error, ambiguity or discrepancy between the provisions of the CONTRACT DOCUMENTS, and:

(1) the provisions of any such standard, specification, manual, code or instruction (whether or not specifically incorporated by reference in the CONTRACT DOCUMENTS); or

(2) the provisions of any Laws or Regulations applicable to the performance of the Work (unless such an interpretation of the provisions of the CONTRACT DOCUMENTS would result in violation of such Law or Regulation).

D. AMENDING AND SUPPLEMENTING CONTRACT DOCUMENTS:

3.04.1. The CONTRACT DOCUMENTS may be amended to provide for additions, deletions and revisions in the WORK or to modify the terms and conditions thereof by either a Change Order or a Written Change Directive.

3.04.2. The requirements of the CONTRACT DOCUMENTS may be supplemented, and minor variations and deviations in the WORK may be authorized, in one or more of the following ways:

a. a Field Order (subject to the provisions of to Article 9);

b. ENGINEER's acceptance of a SHOP DRAWING or sample (subject of the provisions of Article 6); or

c. ENGINEER's written interpretation or clarification (pursuant to paragraph 9.4); or

d. additional instructions and detail drawings, as necessary to carry out the WORK in accordance with the requirements of the CONTRACT DOCUMENTS. The additional drawings and instruction thus supplied will become a part of the CONTRACT DOCUMENTS. The CONTRACTOR shall carry out the WORK in accordance with the additional detail drawings and instruction.

E. REUSE OF DOCUMENTS:

3.05.1. The CONTRACTOR, and any Subcontractor or Supplier or other individual or entity performing or furnishing any of the WORK under a direct or indirect contract with the CONTRACTOR, shall not:

a. have or acquire any title to or ownership rights in any of the DRAWINGS, SPECIFICATIONS or other documents (or copies of any thereof) prepared by or bearing the seal of the ENGINEER or the ENGINEER's consultants, including electronic media editions; or

b. reuse any of such DRAWINGS, SPECIFICATIONS, or other documents or copies on extensions of the Project or any other project without written consent of OWNER and ENGINEER and specific written verification or adaption by the ENGINEER.

3.05.2. The prohibition of this Paragraph B will survive final payment, or termination of the CONTRACT. Nothing herein shall preclude the CONTRACTOR from retaining copies of the CONTRACT DOCUMENTS for record purposes.

F. ELECTRONIC DATA

3.06.1. Copies of data furnished by the OWNER or ENGINEER to the CONTRACTOR or CONTRACTOR to OWNER or ENGINEER that may be relied upon are limited to the printed copies (also known as hard copies). Files in electronic media format or text, data, graphics, or other types are furnished only for the convenience of the receiving party. Any conclusion or information obtained or derived from such electronic files will be at the user's sole risk. If there is a discrepancy between the electronic files and the hard copies, the hard copies govern.

3.06.2. Because data stored in electronic media format can deteriorate or be modified inadvertently or otherwise without authorization of the data's creator, the party receiving electronic files agrees that it will perform acceptance tests or procedures within 60 days, after which the receiving party shall be deemed to have accepted the data thus transferred. Any errors detected within the 60-day acceptance period will be corrected by the transferring party.

3.06.3. When transferring documents in electronic media format, the transferring party makes not representations as to long term compatibility, usability, or readability of documents resulting from the use of software application packages, operating systems, or computer hardware differing from those used by the data's creator.

ARTICLE 4 --- AVAILABILITY OF LANDS; SUBSURFACE AND PHYSICAL CONDITIONS; HAZARDOUS ENVIRONMENTAL CONDITIONS; REFERENCE POINTS

A. AVAILABILITY OF LANDS:

4.01.1. The OWNER shall furnish the lands upon which the WORK is to be performed, rights-of-way and easements for access thereto, and such other lands which are designated for the use of the CONTRACTOR, as indicated in the CONTRACT DOCUMENTS. Easements for permanent structures or permanent changes in existing facilities will be obtained and paid for by the OWNER, unless otherwise provided in the CONTRACT DOCUMENTS.

a. The OWNER shall provide the CONTRACTOR with information which delineates and describes the lands owned, and easements and rights-of-way acquired on the lands upon which the WORK is to be performed.

b. The OWNER shall notify the CONTRACTOR of any encumbrances or restrictions not of general application but specifically related to use of lands so furnished with which the CONTRACTOR will have to comply in performing the WORK.

c. Easements for permanent structures or permanent changes in existing facilities will be obtained and paid for by the OWNER, unless otherwise provided in the CONTRACT DOCUMENTS.

d. If the CONTRACTOR and OWNER are unable to agree on entitlement to or on the amount or extent, if any, of any adjustments in the CONTRACT PRICE or CONTRACT TIME or both, as a result of any delay in the OWNER's furnishing these lands, rights-of-way, easements, or parts thereof, the CONTRACTOR may make a claim therefore as provided in Article 11 and 12.

4.01.2. Upon reasonable written request, the OWNER shall furnish the CONTRACTOR with a current statement of record legal title and legal description of the lands upon which the Work is to be performed and the OWNER's interest therein as necessary for giving notice of or filing a mechanic's or construction lien against such lands in accordance with applicable Laws and Regulations.

4.01.3. The CONTRACTOR shall provide, at his own expense and without liability to the OWNER, for all additional lands and access thereto that may be required for temporary construction facilities or storage of materials and equipment.

B. SUBSURFACE AND PHYSICAL CONDITIONS:

4.02.1. Reports and Drawings. Reference is made to the Supplemental General Conditions for identification of:

a. Those reports of explorations and tests of subsurface conditions at or contiguous to the site that have been utilized by the ENGINEER in preparing the CONTRACT DOCUMENTS; and

b. Those drawings of physical conditions in or relating to existing surface or subsurface structures at or contiguous to the site (except Underground Facilities) that have been utilized by the ENGINEER in preparing the CONTRACT DOCUMENTS.

4.02.2. Limited Reliance by CONTRACTOR on Technical Data Authorized: The CONTRACTOR may rely upon the general accuracy of the "technical data" contained in such reports and drawings, but such reports and drawings are not CONTRACT DOCUMENTS. Such "technical data" is identified in the Supplemental General Conditions. Except for such reliance on such "technical data", the CONTRACTOR may not rely upon or make any claim against the OWNER, ENGINEER or any of the ENGINEER's consultants with respect to:

a. the completeness of such reports and drawings for the CONTRACTOR's purposes, including, but not limited to, any aspects of the means, methods, techniques, sequences and procedures of construction to be employed by the CONTRACTOR and safety precautions and programs incident thereto; or

b. other data, interpretations, opinions and information contained in such reports or shown or indicated in such drawings; or

c. any CONTRACTOR interpretation of or conclusion drawn from any "technical data" or any such data, interpretations, opinions, or information.

C. DIFFERING SUBSURFACE OR PHYSICAL CONDITIONS

4.03.1. Notice of Differing Subsurface or Physical Conditions: If the CONTRACTOR believes that any subsurface or physical condition at or contiguous to the site that is uncovered or revealed either:

a. is of such a nature as to establish that any "technical data" on which the CONTRACTOR is entitled to rely as provided in paragraphs 4.02 is materially inaccurate; or

b. is of such a nature as to require a change in the CONTRACT DOCUMENTS; or

c. differs materially from that shown or indicated in the CONTRACT DOCUMENTS; or

d. is of an unusual nature, and differs materially from conditions ordinarily encountered and generally recognized as inherent in work of the character provided for in the CONTRACT DOCUMENTS; then

e. the CONTRACTOR shall, promptly after becoming aware thereof and before further disturbing the subsurface or physical conditions affected thereby or performing any WORK in connection therewith (except in an emergency as permitted by Article 6), notify the OWNER and ENGINEER in writing about such conditions. The CONTRACTOR shall not further disturb such conditions or perform any WORK in connection therewith (except as aforesaid) until receipt of written order to do so.

4.03.2. ENGINEER's Review. After receipt of written notice as required above, the ENGINEER will promptly review the pertinent conditions, determine the necessity of the OWNER's obtaining additional explorations or tests with respect thereto and advise the OWNER in writing (with a copy to the CONTRACTOR) of the ENGINEER's findings and conclusions.

4.03.3. Possible Contract Document Change. If the ENGINEER concludes that a change in the CONTRACT DOCUMENTS is required as a result of a condition that meets one or more of the categories in paragraphs 4.03, a WORK CHANGE DIRECTIVE or a CHANGE ORDER will be issued as provided in Article 10 to reflect and document the consequences of such change.

4.03.4. Possible Price and Time Adjustments.

a. An equitable adjustment in the CONTRACT PRICE or CONTRACT TIME, or both, will be allowed to the extent that the existence of such uncovered or revealed condition causes an increase or decrease in the CONTRACTOR's cost of, or time required for performance of, the WORK; subject, however, to the following:

(1) such condition must meet any one or more of the categories described in paragraphs 4.03.1; and

(2) a change in the CONTRACT DOCUMENTS pursuant to paragraph 4.03.3 will not be an automatic authorization of nor a condition precedent to entitlement to any such adjustment; and

(3) with respect to Work that is paid for on a Unit Price Basis, any adjustment in the CONTRACT PRICE will be subject to the provisions of Articles 9 and 11.

b. The CONTRACTOR shall not be entitled to any adjustment in the CONTRACT PRICE or TIME if:

(1) the CONTRACTOR knew of the existence of such conditions at the time the CONTRACTOR made a final commitment to the OWNER in respect of CONTRACT PRICE and CONTRACT TIME by the submission of a bid or becoming bound under a negotiated contract; or

(2) the existence of such conditions could reasonably have been discovered or revealed as a result of any examination, investigation, exploration, test or study of the site and contiguous areas required by the BIDDING Requirements or the CONTRACT DOCUMENTS to be conducted by or for the CONTRACTOR prior to the CONTRACTOR's making such final commitment; or

(3) the CONTRACTOR failed to give the written notice within the time and as required by this paragraph.

c. If the OWNER and CONTRACTOR are unable to agree on entitlement to or as to the amount or extent, of any, of any adjustment in the CONTRACT PRICE or CONTRACT TIME, or both, a claim may be made therefore as provided in Articles 11 and 12. However, the OWNER, ENGINEER, and any of ENGINEER's consultants shall not be liable to the CONTRACTOR for any claims, costs, losses or damages (including but not limited to all fees and charges of engineers, attorneys, and other professionals and all court or arbitration or other dispute resolution costs) sustained by the CONTRACTOR on or in connection with any other project or anticipated project.

D. UNDERGROUND FACILITIES

4.04.1. Shown or Indicated. The information and data shown or indicated in the CONTRACT DOCUMENTS with respect to existing Underground Facilities at or contiguous to the site is based on information and data furnished to the OWNER or ENGINEER by the owners of such Underground Facilities or by others. Unless it is otherwise expressly provided in the Supplemental General Conditions:

a. the OWNER and ENGINEER shall not be responsible for the accuracy or completeness of any such information or data; and

b. The cost of all of the following will be included in the CONTRACT PRICE and the CONTRACTOR shall have full responsibility for:

(1) reviewing and checking all such information and data,
(2) locating all Underground Facilities shown or indicated in the CONTRACT DOCUMENTS,
(3) coordination of the WORK with the owners of such Underground Facilities during construction, and
(4) the safety and protection of all such Underground Facilities and repairing any damage thereto resulting from the WORK.

4.04.2. Not Shown or Indicated:

a. If an Underground Facility is uncovered or revealed at or contiguous to the site which was not shown or indicated in the CONTRACT DOCUMENTS, the CONTRACTOR shall promptly after becoming aware thereof and before further disturbing conditions affected thereby or performing any WORK in connection therewith (except in an emergency as permitted by Article 6), identify the owner of such Underground Facility and give written notice thereof to that owner and to the OWNER and ENGINEER. The ENGINEER will promptly review the Underground Facility to determine the extent, if any, to which a change is required in the CONTRACT DOCUMENTS to reflect and document the consequences of the existence of the Underground Facility. During such time, the CONTRACTOR shall be responsible for the safety and protection of such Underground Facility.

b. If the ENGINEER concludes that a change in the CONTRACT DOCUMENTS is required, a Work Change Directive or a Change Order will be issued as provided in Article 10 to reflect and document such consequences. An equitable adjustment shall be made in the CONTRACT PRICE or CONTRACT TIME, or both, to the extent that they are attributable to the existence or location of any Underground Facility that was not shown or indicated with reasonable accuracy in the CONTRACT DOCUMENTS and the CONTRACTOR did not know of and could not reasonably have been expected to be aware of or to have anticipated. If the OWNER and CONTRACTOR are unable to agree on entitlement to or the amount or extent, if any, of any such adjustment in CONTRACT PRICE or CONTRACT TIME, the OWNER or CONTRACTOR may make a claim therefore as provided in Articles 11 and 12. However, the OWNER, ENGINEER, and ENGINEER's Consultants shall not be liable to the CONTRACTOR for any claims, costs, losses, or damages incurred or sustained by the CONTRACTOR on or in connection with any other project or anticipated project.

E. REFERENCE POINTS.

4.05, The OWNER shall provide engineering surveys to establish reference points for construction which in the ENGINEER's judgment are necessary to enable the CONTRACTOR to proceed with the WORK. The CONTRACTOR shall be responsible for laying out the WORK (unless otherwise specified in the General Requirements), shall protect and preserve the established reference points and shall make no changes or relocations without the prior written approval of the OWNER. The CONTRACTOR shall report to the ENGINEER whenever any reference point or property monument is lost or destroyed or requires relocation because of necessary changes in grades or locations, and shall be responsible for the accurate replacement or relocation of such reference points and property monuments by professionally qualified personnel.

F. HAZARDOUS ENVIRONMENTAL CONDITION AT SITE

4.06.1. Reports and Drawings: Reference is made to the Supplemental General Conditions for the identification of those reports and drawings relating to a Hazardous Environmental Condition identified at the Site, if any, that have been utilized by the ENGINEER in the preparation of the CONTRACT DOCUMENTS.

4.06.2. Limited Reliance by CONTRACTOR on Technical Data Authorized: The CONTRACTOR may rely upon the general accuracy of the "technical data" contained in such reports and drawings, but such reports and drawings are not CONTRACT DOCUMENTS. Such "technical data" is identified in the Supplemental General Conditions. Except for such reliance on such "technical data", the CONTRACTOR may not rely upon or make any claim against the OWNER, ENGINEER or any of the ENGINEER's consultants with respect to:

a. the completeness of such reports and drawings for the CONTRACTOR's purposes, including, but not limited to, any aspects of the means, methods, techniques, sequences and procedures of construction to be employed by the CONTRACTOR and safety precautions and programs incident thereto; or

b. other data, interpretations, opinions and information contained in such reports or shown or indicated in such drawings; or

c. any CONTRACTOR interpretation of or conclusion drawn from any "technical data" or any such data, interpretations, opinions, or information.

4.06.3. The CONTRACTOR shall not be responsible for any Hazardous Environmental Condition uncovered or revealed at the Work Site which was not shown or indicated in the Drawings and Specification or indentified in the CONTRACT DOCUMENTS to be within the scope of the Work. The CONTRACTOR shall be responsible for a Hazardous Environmental Condition created with any materials brought to the Site by the CONTRACTOR, Subcontractors, Suppliers, or anyone else for whom the CONTRACTOR is

responsible.

4.06.4. If the CONTRACTOR encounters a Hazardous Environmental Condition or if the CONTRACTOR or anyone for whom the CONTRACTOR is responsible creates a Hazardous Environmental Condition, the CONTRACTOR shall immediately: (i) secure or otherwise isolate such condition; (ii) stop all work in connection with such hazardous condition and in any area affected thereby (except in an emergency as required by Article 6; and (iii) notify the OWNER and ENGINEER (and promptly thereafter confirm such notice in writing).

a. The OWNER shall promptly consult with the ENGINEER concerning the necessity for the OWNER to retain a qualified expert to evaluate such hazardous condition or take corrective action, if any.

4.06.5. The CONTRACTOR shall not be required to resume work in connection with such hazardous condition or in any such affected area until after the OWNER has obtained any required permits related thereto and deliver to the CONTRACTOR special written notice: (i) specifying that such condition and any affected area is or has been rendered safe for the resumption of Work, or (ii) specifying any special conditions under which such Work may be resumed safely.

a. If the OWNER and CONTRACTOR cannot agree as to entitlement to or the amount or extent of an adjustment, if any, in the CONTRACT PRICE or CONTRACT TIMES as a result of such Work stoppage or such special conditions under which Work is agreed by the CONTRACTOR to be resumed, either party may make a claim therefore as provided in Articles 11 and 12.

4.06.6. If after receipt of such special written notice the CONTRACTOR does not agree to resume such Work based on a reasonable belief it is unsafe, or does not agree to resume such Work under such special conditions, then the OWNER may order such portion of the Work that is in connection with such hazardous condition or in such affected area to be deleted from the Work.

a. If the OWNER and CONTRACTOR cannot agree as to entitlement to or the amount or extent of an adjustment, if any, in the CONTRACT PRICE or CONTRACT TIMES as a result of deleting such portion of the Work, then either party may make a claim therefore as provided in Articles 11 and 12.

b. The OWNER may have such deleted portion of the Work performed by the OWNER's own forces or others in accordance with Article 7.

4.06.7. To the fullest extent permitted by Laws and Regulations, the OWNER shall indemnify and hold harmless the CONTRACTOR, Subcontractors, ENGINEER, ENGINEER's Consultants and the officers, directors, employees, agents, other consultants and subcontractors of each and any of them from and against all claims, costs, losses and damages (including but not limited to all fees and charges of engineers, attorneys, and other professionals and all court or arbitration or other dispute resolution costs) arising out of or relating to a Hazardous Environmental Condition, provided that such Condition: (i) was not shown or indicated in the Drawings or Specifications or identified in the CONTRACT DOCUMENTS to be included within the scope of the Work, and (ii) was not created by the CONTRACTOR or by anyone for whom the CONTRACTOR is responsible. Nothing in this Paragraph shall obligate the OWNER to indemnify any individual or entity from and against the consequences of that individual's or entity's own negligence.

4.06.8. To the fullest extent permitted by Laws and Regulations, the CONTRACTOR shall indemnify and hold harmless the OWNER and ENGINEER, and the officers, directors, partners, employees, agents, consultants, and subcontractors of each and any of them from and against all claims, costs, losses, and damages (including but not limited to all fees and charges of engineers, attorneys, and other professionals and all court or arbitration or other dispute resolution costs) arising out of or relating to a Hazardous Environmental Condition created by the CONTRACTOR or by anyone for whom the CONTRACTOR is responsible. . Nothing in this Paragraph shall obligate the CONTRACTOR to indemnify any individual or entity from and against the consequences of that individual's or entity's own negligence.

4.06.9. The provisions of Paragraphs B, C and D do not apply to a Hazardous Environmental uncovered or revealed at the Work Site.

ARTICLE 5 — BONDS AND INSURANCE.

A. PERFORMANCE, PAYMENT AND OTHER BONDS:

5.01.1. The CONTRACTOR shall furnish PERFORMANCE and PAYMENT BONDS, each in an amount at least equal to the CONTRACT PRICE as security for the faithful performance and payment of all CONTRACTOR's obligations under the CONTRACT DOCUMENTS. These BONDS shall remain in effect at least until one year after the date when final payment becomes due, except as otherwise provided by LAW or REGULATION or by the CONTRACT DOCUMENTS. The CONTRACTOR shall also furnish such other Bonds as are required by the Supplemental General Conditions.

5.01.2. All BONDS shall be in the forms prescribed by the CONTRACT DOCUMENTS, except as provided by LAWS or REGULATIONS, and be executed by such sureties as are named in the current list of "Companies Holding Certificates of Authority as Acceptable Sureties on Federal Bonds and as Acceptable Reinsuring Companies" as published in Circular 570 (amended) by the

Audit Staff, Bureau of Government Financial Operations, U.S. Treasury Department. All BONDS signed by an agent must be accompanied by a certified copy of such agent's authority to act.

5.01.3. If the surety on any BOND furnished by the CONTRACTOR is declared a bankrupt or becomes insolvent or its right to do business is terminated in any state where any part of the Project is located or it ceases to meet the requirements of paragraph 5.01.2, the CONTRACTOR shall promptly notify the OWNER and ENGINEER and shall, within 20 days after the event giving rise to such notification, provide another bond and surety, both of which shall comply with the requirements of Paragraph 5.01.2 and Paragraph B, and shall be acceptable to the OWNER.

B. LICENSED SURETIES AND INSURERS

5.02. All BONDS and insurance required by the CONTRACT DOCUMENTS to be purchased and maintained by the OWNER or CONTRACTOR shall be obtained from surety or insurance companies that are duly licensed or authorized in the jurisdiction in which the Project is located to issue the BONDS or insurance policies for the limits and coverages so required.
Such surety and insurance companies shall also meet such additional requirements and qualifications as may be provided in the Supplemental General Conditions.

C. CERTIFICATES OF INSURANCE

5.03.1. The CONTRACTOR shall deliver to the OWNER, with copies to each additional insured identified in the Supplemental General Conditions, certificates of insurance (and other evidence of insurance requested by the OWNER or any other additional insured) which the CONTRACTOR is required to purchase and maintain in accordance with Article 5.

5.03.2. The OWNER shall deliver to the CONTRACTOR, with copies to each additional insured identified in the Supplemental Conditions, certificates of insurance (and other evidence of insurance requested by the CONTRACTOR or any other additional insured) which the OWNER is required to purchase and maintain in accordance with Article 5.

D. CONTRACTOR'S LIABILITY INSURANCE:

5.04.1. The CONTRACTOR shall purchase and maintain such comprehensive general liability and other insurance as is appropriate for the WORK being performed and furnished and as will provide protection from claims set forth below which may arise out of or result from the CONTRACTOR's performance and furnishing of the WORK and CONTRACTOR's other obligations under the CONTRACT DOCUMENTS, whether it is to be performed or furnished by the CONTRACTOR, any Subcontractor or Supplier, or by anyone directly or indirectly employed by any of them to perform or furnish any of the WORK, or by anyone for whose acts any of them may be liable:

a. Claims under workers' compensation, disability benefits and other similar employee benefit acts;

b. Claims for damages because of bodily injury, occupational sickness or disease, or death of the CONTRACTOR's employees;

c. Claims for damages because of bodily injury, sickness or disease, or death of any person other than the CONTRACTOR's employees;

d. Claims for damages insured by customary personal injury liability coverage which are sustained: (i) by any person as a result of an offense directly or indirectly related to the employment of such person by the CONTRACTOR; or (ii) by any other person for any other reason;

e. Claims for damages, other than to the WORK itself, because of injury to or destruction of tangible property wherever located, including loss of use resulting there from; and

f. Claims for damages because of bodily injury or death of any person or property damage arising out of the ownership, maintenance or use of any motor vehicle.

5.04.2. The policies of insurance so required by paragraph 5.04 to be purchased and maintained shall:

a. with respect to insurance required by paragraphs 5.04, include as additional insured (subject to any customary exclusion in respect of professional liability) the OWNER, ENGINEER, and any other persons or entities identified in the Supplemental General Conditions, all of whom shall be listed as additional insured, and include coverage for the respective officers, directors, partners, employees, agents, consultants and subcontractors of each and any of all such additional insured, and the insurance afforded to these additional insured shall provide primary coverage for all claims covered thereby;

b. include at least the specific coverages and be written for not less than the limits of liability provided in the Supplemental General Conditions or required by Laws and Regulations, whichever is greater;

c. include completed operations insurance;

d. include contractual liability insurance covering the CONTRACTOR's indemnity obligations under applicable portions of Article 6;

e. contain a provision or endorsement that the coverage afforded will not be cancelled, materially changed or renewal refused until at least 30 days prior written notice has been given to the OWNER and CONTRACTOR and to each other additional insured identified in the Supplemental General Conditions to whom a certificate of insurance has been issued (and the certificates of insurance furnished by the CONTRACTOR pursuant to Article 5 will so provide);

f. remain in effect in effect at least until final payment and at all times thereafter when the CONTRACTOR may be correcting, removing or replacing defective WORK in accordance with Article 13; and

g. with respect to completed operations insurance, and any insurance coverage written on a claims-made basis, remain in effect for at least two years after final payment.

(1) the CONTRACTOR shall furnish the OWNER and each other additional insured identified in the Supplemental General Conditions to whom a certificate of insurance has been issued evidence, satisfactory to the OWNER and any such additional insured, of continuation of such insurance at final payment and one year thereafter.

E. OWNER'S LIABILITY INSURANCE:

5.05. In addition to the insurance required to be provided by the CONTRACTOR under paragraph 5.04, the OWNER, at the OWNER's option, may purchase and maintain at the OWNER's expense the OWNER's own liability insurance as will protect the OWNER against claims which may arise from operations under the CONTRACT DOCUMENTS.

F. PROPERTY INSURANCE:

5.06.1. Unless otherwise provided in the Supplemental General Conditions, the OWNER shall purchase and maintain property insurance upon the WORK at the site in the amount of the full replacement cost thereof (subject to such deductible amounts as may be provided in the Supplemental General Conditions or required by LAWS and REGULATIONS). This insurance shall:

a. include the interests of the OWNER, CONTRACTOR, Subcontractors, ENGINEER and ENGINEER's consultants and any other persons or entities identified in the Supplemental General Conditions, each of whom is deemed to have an insurable interest and shall be listed as an insured or additional issued;

b. be written on a Builder's Risk "all risk" or open peril or special causes of loss policy form that shall at least include insurance for physical loss and damage to the Work, temporary buildings, false work and Work in transit and shall insure against at least the following perils or causes of loss: fire, lightning, extended coverage, theft, vandalism and malicious mischief, earthquake, collapse, debris removal, demolition occasioned by enforcement of Laws and Regulations, water damage (other than caused by flood), and such other perils as may be specifically required by the Supplementary General Conditions;

c. include expenses incurred in the repair or replacement of any insured property (including but not limited to fees and charges of engineers and architects);

d. cover materials and equipment stored at the site or at another location that was agreed to in writing by the OWNER prior to being incorporated in the Work, provided that such materials and equipment have been included in an Application for Payment recommended by the ENGINEER;

e. allow for partial utilization of the Work by the OWNER;

f. include testing and startup; and

g. be maintained in effect until final payment is made unless otherwise agreed to in writing by the OWNER, CONTRACTOR and ENGINEER with 30 days written notice to each other additional insured to whom a certificate of insurance has been issued.

5.06.2. The OWNER shall purchase and maintain such boiler and machinery insurance or additional property insurance as may be required by the Supplemental General Conditions or LAWS and REGULATIONS which will include the interests of the OWNER, CONTRACTOR, Subcontractors, ENGINEER and ENGINEER's consultants and any other persons or entities identified in the Supplemental Conditions, each of whom is deemed to have an insurable interest and shall be listed as insured or additional insured.

5.06.3. All the policies of insurance (and the certificates or other evidence thereof) required to be purchased and maintained by the OWNER in accordance with applicable portions of Article 5 will contain a provision or endorsement that the coverage afforded will not be cancelled or materially changed or renewal refused until at least thirty days' prior written notice has been given to the OWNER and CONTRACTOR and to each other additional insured to whom a certificate of insurance has been issued and will contain waiver provisions in accordance with applicable portions of Article 5.

5.06.4. The OWNER shall not be responsible for purchasing and maintaining any property insurance to protect the interests of the CONTRACTOR, Subcontractors or others in the WORK to the extent of any deductible amounts that are provided in the Supplementary Conditions. The risk of loss within such identified deductible amount, will be borne by the CONTRACTOR, Subcontractors or others suffering any such loss and if any of them wishes property insurance coverage within the limits of such amounts, each may purchase and maintain it at the purchaser's own expense.

5.06.5. If the CONTRACTOR requests in writing that other special insurance be included in the property insurance policies, provided under applicable portions of Article 5, the OWNER shall, if possible, include such insurance, and the cost thereof will be charged to the CONTRACTOR by appropriate CHANGE ORDER. Prior to commencement of the WORK at the site, the OWNER shall in writing advise the CONTRACTOR whether or not such other insurance has been procured by the OWNER.

G. WAIVER OF RIGHTS

5.07.1. The OWNER and CONTRACTOR intend that all policies purchased in accordance with applicable portions of Article 5 will protect the OWNER, CONTRACTOR, Subcontractors, ENGINEER, ENGINEER's Consultants and all other persons or entities identified in the Supplemental Conditions to be listed as insured or additional insured in such policies and will provide primary coverage for all losses and damages caused by the perils covered thereby. All such policies shall contain provisions to the effect that in the event of payment of any loss or damage the insurers will have no rights of recovery against any of the insured or additional insured there under. The OWNER and CONTRACTOR waive all rights against each other and their respective officers, directors, employees and agents for all losses and damages caused by, arising out of or resulting from any of the perils covered by such policies and any other property insurance applicable to the Work; and, in addition, waive all such rights against Subcontractors, ENGINEER, ENGINEER's Consultants and all other persons or entities identified in the Supplemental Conditions to be listed as insured or additional insured under such policies for losses and damages so caused. None of the above waivers shall extend to the rights that any party making such waiver may have to the proceeds of insurance held by the OWNER as trustee or otherwise payable under any policy so issued.

5.07.2. The OWNER waives all rights against the CONTRACTOR, Subcontractors, ENGINEER, ENGINEER's Consultants and the officers, directors, employees and agents of any of them, for:

a. loss due to business interruption, loss of use or other consequential loss extending beyond direct physical loss or

damage to the OWNER's property of the Work caused by , arising out of or resulting from fire or other peril, whether or not insured by the OWNER; and

b. loss or damage to the completed Project or part thereof caused by, arising out of or resulting from fire or other insured peril covered by any property insurance maintained on the completed Project or part thereof by the OWNER during partial utilization pursuant to paragraph 14.10, after substantial completion pursuant to paragraph 14.8 or after final payment pursuant to paragraph 14.13.

5.07.3. Any insurance policy maintained by the OWNER covering any loss, damage or consequential loss referred to in applicable portions of Article 5 shall contain provisions to the effect that in the event of payment of any such loss, damage or consequential loss the insurers will have no rights of recovery against any of the CONTRACTOR, Subcontractors, ENGINEER, ENGINEER's Consultants and the officers, directors, employees and agents of any of them.

H. RECEIPT AND APPLICATION OF PROCEEDS:

5.08.1. Any insured loss under the policies of insurance required by paragraphs 5.7 and 5.8 will be adjusted with the OWNER and made payable to the OWNER as fiduciary for the insured, as their interests may appear, subject to the requirements of any applicable mortgage clause and of paragraph 5.13. The OWNER shall deposit in a separate account any money so received, and shall distribute it in accordance with such agreement as the parties in interest may reach. If no other special agreement is reached the damaged WORK shall be repaired or replaced, the moneys so received applied on account thereof and the WORK and the cost thereof covered by an appropriate CHANGE ORDER.

5.08.2. The OWNER as fiduciary shall have power to adjust and settle any loss with the insurers unless one of the parties in interest shall object in writing within fifteen days after the occurrence of loss to the OWNER's exercise of this power. If such objection be made, the OWNER as fiduciary shall make settlement with the insurers in accordance with such agreement as the parties in interest may reach. If no such agreement among the parties in interest is reached, the OWNER as fiduciary shall adjust

and settle the loss with the insurers and, if required in writing by any party in interest, the OWNER as fiduciary shall give bond for the proper performance of such duties.

I. ACCEPTANCE OF BONDS AND INSURANCE; OPTION TO REPLACE:

5.09. If either party (the OWNER or CONTRACTOR) has any objection to the coverage afforded by or other provisions of the Bonds or insurance required to be purchased and maintained by the other party in accordance with Article 5 on the basis of non-conformance with the CONTRACT DOCUMENTS, the objecting party shall so notify the other party in writing within ten days after receipt of the certificates (or other evidence requested) required by paragraph 2.7. the OWNER and CONTRACTOR shall each provide to the other such additional information in respect of insurance provided as the other may reasonably request. If either party does not purchase or maintain all of the Bonds and insurance required of such party by the CONTRACT DOCUMENTS, such party shall notify the other party in writing of such failure to purchase prior to the start of Work, or of such failure to maintain prior to any change in the required coverage. Without prejudice to any other right or remedy, the other party may elect to obtain equivalent Bonds or insurance to protect such other party's interests at the expense of the party who was required to provide such coverage, and a Change Order shall be issued to adjust the Contract Price accordingly.

J. PARTIAL UTILIZATION, ACKNOWLEDGMENT OF PROPERTY INSURANCE:

5.10. If the OWNER finds it necessary to occupy or use a portion or portions of the WORK prior to SUBSTANTIAL COMPLETION of all the WORK, such use or occupancy may be accomplished in accordance with paragraph 14.10; provided that no such use or occupancy shall commence before the insurers providing the property insurance have acknowledged notice thereof and in writing effected any changes in coverage necessitated thereby. The insurers providing the property insurance shall consent by endorsement on the policy or policies, but the property insurance shall not be cancelled or permitted to lapse on account of any such partial use or occupancy.

ARTICLE 6 --- CONTRACTOR'S RESPONSIBILITIES.

A. SUPERVISION AND SUPERINTENDENCE:

6.01.1. The CONTRACTOR shall supervise, inspect and direct the WORK competently and efficiently, devoting such attention thereto and applying such skills and expertise as may be necessary to perform the WORK in accordance with the CONTRACT DOCUMENTS. The CONTRACTOR shall be solely responsible for the means, methods, techniques, sequences and procedures of construction. The CONTRACTOR shall not be responsible for the negligence of OWNER or ENGINEER in the design or specifications of a specific means, method, technique, sequence or procedure of construction which is shown or indicated in and expressly required by the CONTRACT DOCUMENTS.

6.01.2. The CONTRACTOR shall be responsible to see that the completed WORK complies accurately with the CONTRACT DOCUMENTS.

6.01.3. At all times during its progress of the Work, the CONTRACTOR shall assign a competent resident superintendent, who shall not be replaced without written notice to the OWNER and ENGINEER, except under extra-ordinary circumstances. The superintendent will be the CONTRACTOR's representative at the site and shall have authority to act on behalf of the CONTRACTOR. All communications given to or received from the superintendent shall be binding on the CONTRACTOR.

B. LABOR; WORKING HOURS

6.02.1. The CONTRACTOR shall provide competent, suitably qualified personnel to survey and lay out the Work and perform construction as required by the CONTRACT DOCUMENTS. The CONTRACTOR shall at all times maintain good discipline and order at the Work site.

6.02..2. Except as otherwise required for the safety or protection of persons or the Work or property at the Work site or adjacent thereto, and except as otherwise stated in the CONTRACT DOCUMENTS, all Work at the site shall be performed during regular working hours. The CONTRACTOR will not permit the performance of Work on a Saturday, Sunday, or any legal holiday without the OWNER's written consent (which will not be unreasonably withheld) given after prior written notice to the ENGINEER.

C. SERVICES, MATERIALS, AND EQUIPMENT

6.03.1. Unless otherwise specified in the General Requirements, the CONTRACTOR shall furnish and assume full responsibility for all services, materials, equipment, labor, transportation, construction equipment and machinery, tools, appliances, fuel, power, light, heat, telephone, water, sanitary facilities, temporary facilities and all other facilities and incidentals necessary for the performance, testing, start-up and completion of the WORK.

6.03.2. All materials and equipment incorporated into the Work shall be as specified or, if not specified, shall be of good quality and new, except as otherwise provided in the CONTRACT DOCUMENTS. All special warranties and guarantees required by the Specifications shall expressly run to the benefit of the OWNER. If required by the ENGINEER, the CONTRACTOR shall

furnish satisfactory evidence (including reports of required tests) as to the source, kind and quality of materials and equipment.

6.03.3. All materials and equipment shall be stored, applied, installed, connected, erected, protected, used, cleaned and conditioned in accordance with instructions of applicable Supplier, except as otherwise provided in the CONTRACT DOCUMENTS.

D. PROGRESS SCHEDULE:

6.04.1. The CONTRACTOR shall adhere to the progress schedule established in accordance with paragraph 2.9 as it may be adjusted from time to time as provided below:

a. The CONTRACTOR shall submit to the ENGINEER for acceptance (to the extent indicated in paragraph 2.9) proposed adjustments in the Progress Schedule that will not change the Contract Times (or Milestones). Such adjustments will conform generally to the Progress Schedule then in effect and additionally will comply with any provisions of the General Requirements applicable thereto.

b. Proposed adjustments in the Progress Schedule that will change the Contract Times (or Milestones) shall be submitted in accordance with the requirements of Article 12. Adjustments In Contract Times may only be made by a Change Order in accordance with Article 12.

E. SUBSTITUTES OR "OR-EQUAL" ITEMS:

6.05.1. Whenever an item of material or equipment is specified or described in the CONTRACT DOCUMENTS by using the name of a proprietary item or the name of a particular Supplier, the specification or description is intended to establish the type, function, appearance, and quality required. Unless the specification or description contains or is followed by words reading that no like, equivalent or “or-equal” item or no substitution is permitted, other items of material or equipment or material or equipment of other Suppliers may be accepted by the ENGINEER under the following circumstances described below:

a. “Or-Equal” Items: If in the ENGINEER’s sole discretion an item of material or equipment proposed by the CONTRACTOR is functionally equal to that named and sufficiently similar so that no change in related Work will be required, it may be considered by the ENGINEER as an “or-equal” item, in which case review and approval of the proposed item may, in the ENGINEER’S sole discretion, be accomplished without compliance with some or all of the requirements for acceptance of proposed substitute items. For the purposes of this paragraph, a proposed item of material or equipment will be considered functionally equal to an item named if:

(1) in the exercise of reasonable judgment the ENGINEER determines that:

(a) it is at least equal in materials of construction, quality, durability, appearance, strength and design characteristics;

(b) it will reliably perform at least equally well the function and achieve the results imposed by the design concept of the completed project as a functioning whole;

(c) it has a proven record of performance and availability of responsive service; and

(2) the CONTRACTOR certifies that, if approved and incorporated into the Work:

(a) there will be no increase in cost to the OWNER or increase in Contract Times; and

(b) it will conform substantially to the detailed requirements of the item named in the CONTRACT DOCUMENTS.

b. Substitute Items:

(1) If in the ENGINEER’s sole discretion an item of material or equipment proposed by the CONTRACTOR does not qualify as an “or-equal” item under paragraph “a” above, it will be considered a proposed substitute item.

(2) The CONTRACTOR shall submit sufficient information as provided below to allow the ENGINEER to determine that the item of material or equipment proposed is essentially equivalent to that named and an acceptable substitute therefore. Requests for review of proposed substitute items of material or equipment will not be accepted by the ENGINEER from anyone other than the CONTRACTOR.

(3) The requirements for review by the ENGINEER will be as set forth in the applicable portions of the General Requirements and as the ENGINEER may decide is appropriate under the circumstances.

(4) If the CONTRACTOR wishes to furnish or use a substitute item of material or equipment, the CONTRACTOR shall make written application to the ENGINEER for review of a proposed substitute item of material or equipment that the CONTRACTOR seeks to furnish or use. The application:

(a) shall certify that the proposed substitute item will:

(i) perform adequately the functions and achieve the results called for by the general design;

(ii) be similar in substance to that specified; and

(iii) be suited to the same use as that specified.

(b) will state:

(i) the extent, if any, to which the use of the proposed substitute item will prejudice the CONTRACTOR’s achievement of Substantial Completion on time;

(ii) whether or not acceptance of the substitute for use in the WORK will require a change in any of the CONTRACT DOCUMENTS (or in the provisions of any other direct contract with the OWNER for work on the Project) to adapt the

design to the proposed substitute item;

(iii) whether or not incorporation or use of the substitute item in connection with the WORK is subject to payment of any license fee or royalty.

(c) will identify:

(i) all variations of the proposed substitute from that specified; and

(ii) available engineering, sales, maintenance, repair and replacement service.

(d) and shall contain an itemized estimate of all costs or credits that will result directly or indirectly from use of such substitute item, including costs of redesign and claims of other contractors affected by the resulting change, all of which shall be considered by the ENGINEER in evaluating the proposed substitute.

(5) The ENGINEER may require the CONTRACTOR to furnish additional data about the proposed substitute item.

6.05.2. Substitute Construction Methods or Procedures: If a specific means, method, technique, sequence or procedure of construction is expressly required by the CONTRACT DOCUMENTS, the CONTRACTOR may furnish or utilize a substitute means, method, technique, sequence or procedure of construction acceptable to the ENGINEER. The CONTRACTOR shall submit sufficient information to allow the ENGINEER, in the ENGINEER's sole discretion, to determine that the substitute proposed is equivalent to that expressly called for by the CONTRACT DOCUMENTS. The requirements for review by the ENGINEER will be similar to those provided in paragraph 6.05.1.b.

6.05.3. Engineer's Evaluation: The ENGINEER will be allowed a reasonable time within which to evaluate each proposal or submittal made pursuant to applicable portions of Article 6. The ENGINEER will be the sole judge of acceptability. No "or-equal" or substitute will be ordered, installed or utilized until the ENGINEER's review is complete, which will be evidenced by either a CHANGE ORDER for a substitute or an approved SHOP DRAWING for an "or equal". The ENGINEER will advise the CONTRACTOR in writing of any negative determination.

6.05.4. Special Guarantee: The OWNER may require the CONTRACTOR to furnish at the CONTRACTOR's expense a special performance guarantee or other surety with respect to any substitute.

6.05.5. Engineer's Cost Reimbursement: The ENGINEER will record the ENGINEER's costs in evaluating a substitute proposed or submitted by the CONTRACTOR pursuant to applicable portions of Article 6. Whether or not the ENGINEER accepts a substitute item so proposed or submitted by the CONTRACTOR, the CONTRACTOR shall reimburse the OWNER for the charges of the ENGINEER for making changes in the CONTRACT DOCUMENTS (or in the provisions of any other direct contract with the OWNER) resulting from the acceptance of each proposed substitute item.

F. CONCERNING SUBCONTRACTORS, SUPPLIERS AND OTHERS:

6.06.1. The CONTRACTOR shall not employ any Subcontractor, Supplier or other person or organization (including those acceptable to the OWNER and ENGINEER as indicated in Article 6), whether initially or as a replacement, against whom the OWNER or ENGINEER may have reasonable objection. The CONTRACTOR shall not be required to employ any Subcontractor, Supplier or other person or organization to furnish or perform any of the WORK against whom the CONTRACTOR has reasonable objection.

6.06.2. If the Supplemental General Conditions require the identity of certain Subcontractors, Suppliers or other persons or organizations (including those who are to furnish the principal items of materials and equipment) to be submitted to the OWNER in advance for acceptance by the OWNER and ENGINEER by a specified date prior to the Effective Date of the AGREEMENT, and if the CONTRACTOR has submitted a list thereof in accordance with the Supplemental General Conditions, the OWNER or ENGINEER's acceptance (either in writing or by failing to make written objection thereto by the date indicated for acceptance or objection in the bidding documents or the CONTRACT DOCUMENTS) of any such Subcontractor, Supplier or other person or organization so identified may be revoked on the basis of reasonable objection after due investigation. The CONTRACTOR shall submit an acceptable substitute for the rejected Subcontractor, Supplier, or other individual on entity, and the CONTRACT PRICE will be adjusted by the difference in the cost occasioned by such substitution and an appropriate CHANGE ORDER will be issued. No acceptance by the OWNER or ENGINEER of any such Subcontractor, Supplier or other person or organization shall constitute a waiver or any right of the OWNER or ENGINEER to reject defective WORK.

6.06.3. The CONTRACTOR shall be fully responsible to the OWNER and ENGINEER for all acts and omissions of the Subcontractors, Suppliers and other persons and organizations performing or furnishing any of the WORK just as the CONTRACTOR is responsible for the CONTRACTOR's own acts and omissions. Nothing in the CONTRACT DOCUMENTS:

a. shall create for the benefit of any such Subcontractor, Supplier or other person or organization any contractual relationship between the OWNER or ENGINEER and any such Subcontractor, Supplier or other person or organization; nor

b. shall create any obligation on the part of the OWNER or ENGINEER to pay or to see to the payment of any moneys due any such Subcontractor, Supplier or other person or organization except as may otherwise be required by LAWS and REGULATIONS.

6.06.4. The CONTRACTOR shall be solely responsible for scheduling and coordinating the Work of Subcontractors, Suppliers and other persons and organizations performing or furnishing any of the Work under a direct or indirect contract with the

CONTRACTOR.

6.06.5 The CONTRACTOR shall require all Subcontractors, Suppliers and such other persons and organizations performing and furnishing any of the Work to communicate with the ENGINEER through the CONTRACTOR.

6.06.6. The divisions and sections of the Specifications and the identifications of any DRAWING shall not control the CONTRACTOR in dividing the WORK among Subcontractors or Suppliers or delineating the WORK to be performed by any specific trade.

6.06.7. All WORK performed for the CONTRACTOR by a Subcontractor or Supplier will be pursuant to an appropriate agreement between the CONTRACTOR and the Subcontractor or Supplier which specifically binds the Subcontractor or Supplier to the applicable terms and conditions of the CONTRACT DOCUMENTS for the benefit of the OWNER and ENGINEER. Whenever any such agreement is with a Subcontractor or Supplier who is listed as an additional insured on the property insurance provided in applicable portions of Article 5, the agreement between the CONTRACTOR and the Subcontractor or Supplier will contain provisions whereby the Subcontractor or Supplier waives all rights against the OWNER, CONTRACTOR, ENGINEER, ENGINEER's Consultants and all other additional insured for all losses and damages caused by, arising out of or resulting from any of the perils covered by such policies and any other property insurance applicable to the Work. If the insurers on any such policies require separate waiver forms to be signed by any Subcontractor or Supplier, the CONTRACTOR will obtain the same.

G. PATENT FEES AND ROYALTIES:

6.07.1. The CONTRACTOR shall pay all license fees and royalties and assume all costs incident to the use in the performance of the WORK or the incorporation in the WORK of any invention, design, process, product or device which is the subject of patent rights or copyrights held by others. If a particular invention, design, process, product or device is specified in the CONTRACT DOCUMENTS for use in the performance of the WORK and if to the actual knowledge of the OWNER or ENGINEER its use is subject to patent rights or copyrights calling for the payment of any license fee or royalty to others, the existence of such rights shall be disclosed by the OWNER in the CONTRACT DOCUMENTS.

6.07.2. To the fullest extent permitted by Laws and Regulations, the CONTRACTOR shall indemnify and hold harmless the OWNER, ENGINEER, ENGINEER's Consultants and the officers, directors, employees, agents and other consultants of each and any of them from and against all claims, costs, losses and damages (including but not limited to all fees and charges of engineers, attorneys, and other professionals and all court or arbitration or other dispute resolution costs) arising out of or resulting from any infringement of patent rights or copyrights incident to the use in the performance of the WORK or resulting from the incorporation in the WORK of any invention, design, process, product or device not specified in the CONTRACT DOCUMENTS.

H. PERMITS:

6.08. Unless otherwise provided in the Supplemental General Conditions, the CONTRACTOR shall obtain and pay for all construction permits and licenses. The OWNER shall assist the CONTRACTOR, when necessary, in obtaining such permits and licenses. The CONTRACTOR shall pay all governmental charges and inspection fees necessary for the prosecution of the WORK, which are applicable at the time of opening of BIDS, or, if there are no BIDS, on the Effective Date of the AGREEMENT. The OWNER shall pay all charges of utility owners for connections for providing permanent service to the WORK.

I. LAWS AND REGULATIONS:

6.09.1 The CONTRACTOR shall give all notices and comply with all Laws and Regulations applicable to the performance of the Work. Except where otherwise expressly required by applicable Laws and Regulations, neither the OWNER nor ENGINEER shall be responsible for monitoring the CONTRACTOR's compliance with any Laws or Regulations.

6.09.2 If the CONTRACTOR performs any Work knowing or having reason to know that it is contrary to Laws or Regulations, the CONTRACTOR shall bear all claims, costs, losses and damages (including but not limited to all fees and charges of engineers, attorneys, and other professionals and all court or arbitration or other dispute resolution costs) arising out of or relating to such Work. However, it shall not be the CONTRACTOR's primary responsibility to make certain that the Specifications and Drawings are in accordance with Laws and Regulations, but this shall not relieve the CONTRACTOR of CONTRACTOR's obligations under Article 3.

6.09.3. Changes in Laws or Regulations not known at the time of the opening of Bids (or, on the Effective Date of the Agreement if there were no Bids) having an effect on the cost or time of performance of the Work shall be the subject of an adjustment in the Contract Price or Contract Times. If the OWNER and CONTRACTOR are unable to agree on entitlement to or on the amount or extent, if any, of any such adjustment, a Claim may be made therefore as provide in Article 10.

J. TAXES:

6.10. The CONTRACTOR will pay all sales, consumer, use and other similar taxes required to be paid by the CONTRACTOR in accordance with the Laws and Regulations of the place of the Project which are applicable during the performance of the WORK.

K. USE OF WORK SITE AND OTHER AREAS:

6.11.1. Limitations on the Use of the Work Site and Other Areas:

a. The CONTRACTOR shall confine construction equipment, the storage of materials and equipment, and the operations of workers to the Work site and other areas identified in and permitted by the Contract Documents and as permitted by Laws and Regulations, and shall not unreasonably encumber the Work site and other areas with construction equipment or other materials or equipment. The CONTRACTOR shall assume full responsibility for any damage to any such land or area, or to the owner or occupant thereof, or of any adjacent land or areas, resulting from the performance of the Work.

b. Should any claim be made by any such owner or occupant because of the performance of the Work, the CONTRACTOR shall promptly settle with such other party by negotiation or otherwise resolve the claim by arbitration or other dispute resolution proceeding or at law.

c. The CONTRACTOR shall, to the fullest extent permitted by Laws and Regulations, indemnify and hold harmless the OWNER, ENGINEER, ENGINEER's Consultant and anyone directly or indirectly employed by any of them from and against all

claims, costs, losses and damages (including but not limited to all fees and charges of engineers, attorneys, and other professionals and all court or arbitration or other dispute resolution costs) arising out of or relating to any claim or action, legal or equitable, brought by any such owner or occupant against the OWNER, ENGINEER or any other party indemnified hereunder to the extent caused by or based upon the CONTRACTOR's performance of the Work.

6.11.2. Removal of Debris During Performance of the Work.

a. During the progress of the Work, the CONTRACTOR shall keep the Work site and other areas free from accumulations of waste materials, rubbish and other debris. Removal and disposal of such waste materials, rubbish, and other debris shall conform to applicable Laws and Regulations.

b. Cleaning: Prior to Substantial Completion of the Work, the CONTRACTOR shall clean the Work site and other areas and make it ready for utilization by the OWNER. At the completion of the Work, the CONTRACTOR shall remove from the Work site and other areas all waste materials, rubbish and debris as well as all tools, appliances, construction equipment, and machinery, and surplus materials; and shall restore to original condition all property not designated for alteration by the Contract Documents.

6.11.3. The CONTRACTOR shall not load nor permit any part of any structure to be loaded in any manner that will endanger the structure, nor shall the CONTRACTOR subject any part of the Work or adjacent property to stresses or pressures that will endanger it.

L. RECORD DOCUMENTS:

6.12. The CONTRACTOR shall maintain in a safe place at the Work site one record copy of all Drawings, Specifications, Addenda, Written Amendments, Change Orders, Work Change Directives, Field Orders and written interpretations and clarifications (issued pursuant to Article 9) in good order and annotated to show all changes made during construction. These record documents, together with all approved samples and a counterpart of all approved Shop Drawings, will be available to the ENGINEER for reference. Upon completion of the Work, these record documents, samples and Shop Drawings will be delivered to the ENGINEER for the OWNER.

M. SAFETY AND PROTECTION:

6.13.1. The CONTRACTOR shall be responsible for initiating, maintaining and supervising all safety precautions and

programs in connection with the Work. The CONTRACTOR shall take all necessary precautions for the safety of, and shall provide the necessary protection to prevent damage, injury or loss to:

a. all persons on the Work site or who may be affected by the Work;

b. all the Work and materials and equipment to be incorporated therein, whether in storage on or off the site; and

c. other property at the site or adjacent thereto, including trees, shrubs, lawns, walks, pavements, roadways, structures, utilities and underground facilities not designated for removal, relocation or replacement in the course of construction.

6.13.2. The CONTRACTOR shall comply with all applicable Laws and Regulations of any public body having jurisdiction for the safety of persons or property, or to protect ion of persons or property from damage, injury or loss; and shall erect and maintain all necessary safeguards for such safety and protection. The CONTRACTOR shall notify owners of adjacent property and of underground facilities and utility owners where prosecution of the Work may affect them, and shall cooperate with them in the

protection, removal, relocation and replacement of their property.

6.13.3. All damage, injury or loss to any property referred to in this paragraph M caused, directly or indirectly, in whole or in part, by the CONTRACTOR, any Subcontractor, Supplier or any other person or organization directly or indirectly employed by any of them to perform or furnish any of the Work or anyone for whose acts any of them may be liable, shall be remedied by the CONTRACTOR (except damage or loss attributable to the fault of the Drawings or Specifications or the acts or omissions of the OWNER or ENGINEER or ENGINEER's Consultant or anyone employed by any of them or anyone for whose acts either of them may be liable, and not attributable, directly or indirectly, in whole or in part, to the fault or negligence of the CONTRACTOR or any Subcontractor, Supplier or other person or organization directly or indirectly employed by any of them).

6.13.4. The CONTRACTOR's duties and responsibilities for the safety and protection of the Work shall continue until such time as all the Work is completed and the ENGINEER has issued a notice to the OWNER and CONTRACTOR in accordance with Article 14 that the Work is acceptable (except as otherwise expressly provided in connection with Substantial Completion).

N. SAFETY REPRESENTATIVE:

6.14. The CONTRACTOR shall designate a qualified and experienced safety representative at the Work site whose duties and responsibilities shall be the prevention of accidents and the maintaining and supervising of safety precautions and programs.

O. HAZARD COMMUNICATION PROGRAMS:

6.15. The CONTRACTOR shall be responsible for coordinating any exchange of material safety data sheets or other hazard communication information required to be made available to or exchanged between or among employers at the Work site in accordance with Laws and Regulations.

P. EMERGENCIES:

6.16. In emergencies affecting the safety or protection of persons or the Work or property at the Work site or adjacent thereto, the CONTRACTOR, without special instruction or authorization from the ENGINEER or OWNER, is obliged to act to prevent threatened damage, injury or loss. The CONTRACTOR shall give the ENGINEER prompt written notice if the CONTRACTOR believes that any significant changes in the Work or variations from the Contract Documents have been caused thereby or are required as a result thereof. If the ENGINEER determines that a change in the Contract Documents is required because of the action taken by the CONTRACTOR in response to an emergency, a Work Change Directive or Change Order will be issued to document the consequences of such action.

Q. SHOP DRAWINGS AND SAMPLES:

6.17.1 The CONTRACTOR shall submit Shop Drawings and samples to the ENGINEER for review and acceptance in accordance with the accepted schedule of Shop Drawings and Sample submittals (as required in Article 2). Each submittal will be identified as the ENGINEER may require.

a. Shop Drawings.
(1) Submit number of copies specified in the General Requirements.
(2) Data shown on Shop Drawings will be complete with respect to quantities, dimensions, specified performance and design criteria, materials and similar data to show the ENGINEER the services, materials and equipment the CONTRACTOR proposes to provide and to enable the ENGINEER to review the information for the limited purposes required by Article 6.

b. Samples. The CONTRACTOR shall also submit Samples to the ENGINEER for review and acceptance in accordance with the accepted schedule of Shop Drawings and Sample submittals.
(1) Submit number of Samples as specified in the Specifications.
(2) Clearly identified each sample as to material, Supplier, pertinent data such as catalog numbers and the use for which intended and other data as the ENGINEER may require to enable the ENGINEER to review the submittal for the limited purposes required by Article 6.

6.17.2. Where a Shop Drawing or Sample is required by the CONTRACT DOCUMENTS or the Schedule or Submittals, any related Work performed prior to the ENGINEER's review and acceptance of the pertinent submittal will be at the sole expense and responsibility of the CONTRACTOR.

6.17.3. Submittal Procedures:

a. Before submitting each Shop Drawing or Sample, the CONTRACTOR shall have determined and verified:
(1) all field measurements, quantities, dimensions, specified performance criteria, installation requirements, materials, catalog numbers and similar information with respect thereto;
(2) the suitability of all materials with respect to intended use, fabrication, shipping, handling, storage, assembly and installation pertaining to the performance of the Work;

(3) all information relative to the CONTRACTOR's sole responsibilities in respect of means, methods, techniques, sequences and procedures of construction and safety precautions and programs incident thereto; and

(4) shall also have reviewed and coordinated each Shop Drawing or Sample with other Shop Drawings and Samples and with the requirements of the Work and the Contract Documents.

b. Each submittal will bear a stamp or specific written indication that the CONTRACTOR has satisfied the CONTRACTOR's obligations under the Contract Documents with respect to the CONTRACTOR's review and approval of that submittal.

c. With each submission, the CONTRACTOR shall give the ENGINEER specific written notice of such variations, if any, that the Shop Drawings or Samples submitted may have from the requirements of the Contract Documents. This notice shall be both a written communication separate from the Shop Drawing's or Sample submittal; and, in addition, by a specific notation made on each Shop Drawing and Sample submitted to the ENGINEER for review and acceptance of each such variation.

6.17.4. ENGINEER's REVIEW.

a. The ENGINEER will provide timely review of Shop Drawings and Samples in accordance with the schedule of Shop Drawings and Sample submittals accepted by the ENGINEER. The ENGINEER's review and acceptance will be only to determine if the items covered by the submittals will, after installation or incorporation in the Work, conform to the information given in the Contract Documents and be compatible with the design concept of the completed Project as a functioning whole as indicated by the Contract Documents.

b. The ENGINEER's review and acceptance will not extend to means, methods, techniques, sequences or procedures of constructions (except where a particular means, method, technique, sequence or procedure of construction is specifically and expressly called for by the Contract Documents) or to safety precautions or programs incident thereto. The review and acceptance of a separate item as such will not indicate acceptance of the assembly in which the item functions. The CONTRACTOR shall make corrections required by the ENGINEER, and shall return the required number of corrected copies of Shop Drawings and submit as required new Samples for review and acceptance. The CONTRACTOR shall direct specific attention in writing to revisions other than the corrections called for by the ENGINEER on previous submittals.

c. The ENGINEER's review and acceptance of Shop Drawings or Samples shall not relieve the CONTRACTOR from responsibility for any variation from the requirements of the Contract Documents unless the CONTRACTOR has complied with the requirements of applicable portions of Article 6 and in writing called the ENGINEER's attention to each such variation at the time of submission; and the ENGINEER has given written acceptance of each such variation by a specific written notation thereof incorporated in or accompanying the Shop Drawings or Sample acceptance; nor will any acceptance by the ENGINEER relieve the CONTRACTOR from responsibility for complying with the requirements of applicable portions of Article 6.

d. Where a Shop Drawing or Sample is required by the Contract Documents, any related Work performed prior to the ENGINEERS's review and acceptance of the pertinent submittal will be at the sole expense and responsibility of the CONTRACTOR.

6.17.5. Resubmittal Procedures.

a. The CONTRACTOR shall make corrections required by the ENGINEER and shall return the required number of corrected copies of the Shop Drawings and submit, as required, new Samples for review and acceptance. The CONTRACTOR shall direct specific attention in writing to revisions other than the corrections called for by the ENGINEER on previous submittals.

R. CONTINUING THE WORK:

6.18. The CONTRACTOR shall carry on the Work and adhere to the progress schedule during all disputes or disagreements with the OWNER. No Work shall be delayed or postponed pending resolution of any disputes or disagreements, except as permitted by Article 15 or as the CONTRACTOR and OWNER may otherwise agree in writing.

S. CONTRACTOR'S GENERAL WARRANTY AND GUARANTEE:

6.19.1. The CONTRACTOR warrants and guarantees to the OWNER, ENGINEER and ENGINEER's Consultants that all Work will be in accordance with the Contract Documents and will not be defective. The ENGINEER and its related entities shall be entitled to rely on representation of the CONTRACTOR's warranty and guarantee.

6.19.2. The CONTRACTOR's warranty and guarantee hereunder excludes defects or damage caused by:

a. abuse, modification or improper maintenance or operation by persons other than the CONTRACTOR, Subcontractors, Suppliers, or other individual or entity for whom the CONTRACTOR is responsible; or
b. normal wear and tear under normal usage.

6.19.3. The CONTRACTOR's obligation to perform and complete the Work in accordance with the Contract Documents shall be absolute. None of the following will constitute an acceptance of the Work that is not in accordance with the Contract Documents or a release of the CONTRACTOR's obligation to perform the Work in accordance with the Contract Documents:

a. observations by the ENGINEER;

b. recommendation by the ENGINEER or payment by the OWNER of any progress or final payment;

c. issuance of a certificate of Substantial Completion by the ENGINEER or any payment related thereto by the OWNER;

d. use or occupancy of the Work or any part thereof by the OWNER;

e. any review and acceptance of a Shop Drawing or Sample submittal or the issuance of a notice of acceptability by the ENGINEER;

f. any inspection, test of approval by others; or
g. any correction of defective Work by the OWNER.

T. INDEMNIFICATION:

6.20.1. To the fullest extent permitted by Laws and Regulations, the CONTRACTOR shall indemnify and hold harmless the OWNER, ENGINEER, and ENGINEER's Consultants and the officers, directors, employees, agents and other consultants of each and any of them from and against all claims, costs, losses, and damages (including but not limited to fees and charges of engineers, architects, attorneys and other professionals and all court and arbitration or other dispute resolution costs) arising out of or relating to the performance of the Work, provided that any such claim, cost, loss or damage is attributable to bodily injury, sickness, disease or death, or to injury to or destruction of tangible property (other than the Work itself), including the loss of use resulting there from, but only to the extent caused by any negligent act or omission of the CONTRACTOR, any subcontractor, any Supplier, any person or organization directly or indirectly employed by any of them to perform any of the Work or anyone for whose acts any of them may be liable.

6.20.2. In any and all claims against the OWNER or ENGINEER or any of their respective consultants, agents, officers, directors or employees by any employee (or the survivor or personal representative of such employee) of the CONTRACTOR, any subcontractor, any Supplier, any person or organization directly or indirectly employed by any of them to perform any of the Work, or anyone for whose acts any of them may be liable, the indemnification obligation under applicable portions of Article paragraph 6 shall not be limited in any way by any limitation on the amount or type of damages, compensation or benefits payable by or for the CONTRACTOR or any such subcontractor, Supplier or other person or organization under the workers' compensation acts, disability benefit acts or other employee benefit acts.

6.20.3. The indemnification obligations of the CONTRACTOR under applicable portions of Article 6 shall not extend to the liability of the ENGINEER and ENGINEER's consultants, officers, directors, employees, agents, consultants and subcontractors arising out of:

a. the preparation or approval of, or the failure to prepare or approve, maps, Drawings, opinions, reports, surveys, Change Orders, designs, or Specifications; or

b. giving directions or instructions, or failing to give them, if that is the primary cause of the injury or damage.

U. DELEGATION OF PROFESSIONAL DESIGN SERVICES

6.21.1. The CONTRACTOR will not be required to provide professional design services unless such services are specifically required by the CONTRACT DOCUMENTS for a portion of the Work or unless such services are required to carry out the CONTRACTOR's responsibilities for construction means, methods, techniques, sequences and procedures. The CONTRACTOR shall not be required to provide professional services in violation of applicable law.

6.21.2.. If professional design services or certifications by a design professional related to systems, materials or equipment are specifically required of the CONTRACTOR by the CONTRACT DOCUMENTS, the OWNER and ENGINEER will specify all performance and design criteria that such services must satisfy. The CONTRACTOR shall cause such services or certifications to be provided by a properly licensed professional, whose signature and seal shall appear on all drawings, calculations, specifications, certifications, Shop Drawings and other submittals prepared by such professional. Shop Drawings and other submittals related to the Work designed or certified by such professional, if prepared by others, shall bear such professional's written approval when submitted to the ENGINEER.

6.21.3. The OWNER and ENGINEER shall be entitled to rely upon the adequacy, accuracy and completeness of the services, certifications or approvals performed by such design professionals, provided the OWNER and ENGINEER have specified to the CONTRACTOR all performance and design criteria that such services must satisfy.

6.21.4. Pursuant to this Paragraph 6.21, the ENGINEER's review and acceptance of design calculations and design drawings will be only for the limited purpose of checking for conformance with performance and design criteria given and the design concept expressed in the CONTRACT DOCUMENTS. The ENGINEER's review and acceptance of Shop Drawings and other submittals (except design calculations and design drawings) will be only for the purpose stated in Paragraph 6.17.

6.21.5. The CONTRACTOR shall not be responsible for the adequacy of the performance or design criteria required by the CONTRACT DOCUMENTS.

ARTICLE 7 --- OTHER WORK

A. RELATED WORK AT SITE:

7.01.1 The OWNER may perform other work related to the Project at the Site by the OWNER's own forces, or via other direct contracts therefore which shall contain General Conditions similar to these, or have other work performed by utility owners. If the fact that such other work is to be performed was not noted in the Contract Documents, then:

a. written notice thereof will be given to the CONTRACTOR prior to starting any such other work; and

b. if the OWNER and CONTRACTOR are unable to agree on entitlement to or on the amount or extent, if any, of any adjustment in the Contract Price or Contract Times that should be allowed as a result of such other work, a Claim may be made therefore as provided in Articles 10.

7.01.2. The CONTRACTOR shall afford each other contractor who is a party to such a direct contract, each utility owner and the OWNER, if the OWNER is performing other work with the OWNER's employees, proper and safe access to the Work site, and a reasonable opportunity for the introduction and storage of materials and equipment and the execution of such work, and shall properly coordinate the Work with theirs. Unless otherwise provided in the Contractor Documents, the CONTRACTOR shall do all cutting, fitting and patching of the Work that may be required to properly connect or otherwise make its several parts come together and properly integrate with such other work. The CONTRACTOR shall not endanger any work of others by cutting, excavating or otherwise altering their work and will only cut or alter their work with the written consent of the ENGINEER and the others whose work will be affected. The duties and responsibilities of the CONTRACTOR under this paragraph are for the benefit of such utility owners and other contractors to the extend that there are comparable provisions for the benefit of the CONTRACTOR in said direct contracts between the OWNER and such utility owners and other contractors.

7.01.3. If the proper execution or results of any part of the CONTRACTOR's Work depends upon work performed by others under this Article 7, the CONTRACTOR shall inspect such other work and promptly report to the ENGINEER in writing any delays, defects or deficiencies in such other work that render it unavailable or unsuitable for the proper execution and results of the CONTRACTOR's Work. The CONTRACTORS's failure so to report will constitute an acceptances of such other work as fit and proper for integration with the CONTRACTOR's Work, except for latent or non-apparent defects and deficiencies in such other work.

B. COORDINATION:

7.02.1. If the OWNER intends to contract with others for the performance of other work on the Project at the site, the following will be set forth in the Supplemental General Conditions:

a. the individual or entity who will have authority and responsibility for coordination of the activities among the various prime contractors will be identified;

b. the specific matters to be covered by such authority and responsibility will be itemized; and

c. the extent of such authority and responsibilities will be provided.

7.02.2. Unless otherwise provided in the Supplemental General Conditions, the OWNER shall have sole authority and

responsibility in respect of such coordination.

C. LEGAL RELATIONSHIPS.

7.03.1. Paragraphs 7.A and 7.B are not applicable for utilities not under the control of the OWNER.

7.03.2. Each other direct contract of the OWNER under Paragraph 7.A shall provide that the other contractor is liable to the OWNER and the CONTRACTOR for the reasonable direct delay and disruption cost incurred by the CONTRACTOR as a result of the other contractor's actions or inactions.

7.03.3. The CONTRACTOR shall be liable to the OWNER and any other contractor for the reasonable direct delay and disruption costs incurred by such other contractor as a result of the CONTRACTOR's action or inaction.

ARTICLE 8 — OWNER'S RESPONSIBILITIES.

A. COMMUNICATIONS TO CONTRACTOR

8.01. Except as otherwise provided in these General Conditions, the OWNER shall issue all communications to the CONTRACTOR through the ENGINEER.

B. REPLACEMENT OF ENGINEER

8.02. In case of termination of the employment of the ENGINEER, the OWNER shall appoint an engineer to whom the CONTRACTOR makes no reasonable objection, whose status under the Contract Documents shall be that of the former ENGINEER.

C. FURNISH DATA

8.03. The OWNER shall promptly furnish the data required of the OWNER under the Contract Documents.

D. PAY WHEN DUE

8.04. The OWNER shall make payments to the CONTRACTOR when they are due as provided in Article 14.

E. LANDS AND EASEMENTS; REPORTS AND TESTS

8.05. The OWNER's duties in respect of providing lands and easements and providing engineering surveys to establish reference points are set forth in applicable portions of Article 4. Article 4 refers to the OWNER's identifying and making available to the CONTRACTOR copies of reports of explorations and tests of subsurface conditions at the site and drawings of physical conditions in or relating to existing surface or subsurface structures at or contiguous to the Work site that have been utilized by the ENGINEER in preparing the Contract Documents.

F. INSURANCE

8.06. The OWNER's responsibilities, if any, in respect to purchasing and maintaining liability and property insurance are set forth in Article 5.

G. CHANGE ORDERS

8.07. The OWNER is obligated to execute Change Orders as indicated in Article 10.

H. INSPECTIONS, TESTS, AND APPROVALS

8.08. The OWNER's responsibility in respect of certain inspections, tests and approvals is set forth in Article 13.

I. LIMITATIONS ON OWNER'S RESPONSIBILITIES

8.09 The OWNER shall not supervise, direct or have control or authority over, nor be responsible for, the CONTRACTOR's means, methods, techniques, sequences or procedures of construction or the safety precautions and programs incident thereto, or for any failure of the CONTRACTOR to comply with Laws and Regulations applicable to the furnishing or performance of the Work. The OWNER will not be responsible for the CONTRACTOR's failure to perform or furnish the Work in accordance with the Contract Documents.

J. UNDISCLOSED HAZARDOUS ENVIRONMENTAL CONDITION

8.10. The OWNER's responsibility in respect of undisclosed Hazardous Environmental Condition is set forth is Article 4.

K. EVIDENCE OF FINANCIAL ARRANGEMENTS

8.11. If and to the extent the OWNER has agreed to furnish the CONTRACTOR reasonable evidence that financial arrangements have been made to satisfy the OWNER's obligations under the Contract Documents, the OWNER's responsibility in respect thereof will be as set forth in the Supplemental General Conditions.

ARTICLE 9 — ENGINEER'S STATUS DURING CONSTRUCTION.

A. OWNER'S REPRESENTATIVE:

9.01. The ENGINEER will be the OWNER's representative during the construction period. The duties and responsibilities and the limitations of authority of the ENGINEER, as the OWNER's representative during construction, are set forth in the Contract Documents and will not be changed without written consent of the OWNER and the ENGINEER.

B. VISITS TO SITE:

9.02.1. The ENGINEER will make visits to the Work site at intervals appropriate to the various stages of construction as the ENGINEER deems necessary in order to observe as an experienced and qualified design professional the progress that has been made and the quality of the various aspects of the CONTRACTOR's executed Work. Based on information obtained during such visits and observations, the ENGINEER, for the benefit of the OWNER, will determine, in general, if the Work is proceeding in accordance with the Contract Documents. The ENGINEER will not be required to make exhaustive or continuous inspections on the Work site to check the quality or quantity of the Work. The ENGINEER's efforts will be directed toward providing for the OWNER a greater degree of confidence that the completed Work will conform generally to the Contract Documents. On the basis of such visits and on-site observations, the ENGINEER will keep the OWNER informed of the progress of the Work and will endeavor to guard the OWNER against defective Work.

9.02.2. The ENGINEER's visits and on-site observations are subject to all the limitations on the ENGINEER's authority and responsibility set forth in paragraph 9.B.09. Particularly, but without limitation, during or as a result of the ENGINEER's on-site visits or observations of the CONTRACTOR's Work, the ENGINEER will not supervise, direct, control or have authority over or be responsible for the CONTRACTOR's means, methods, techniques, sequences or procedures of construction, or the safety precautions and programs incident thereto, or for any failure of the CONTRACTOR to comply with Laws and Regulations applicable to the furnishing or performance of the Work.

C. PROJECT REPRESENTATION:

9.03. If the OWNER and ENGINEER agree, the ENGINEER will furnish a Resident Project Representative to assist the ENGINEER in providing more continuous observation of the Work. The authority and responsibilities of any such Resident Project Representative and assistants will be as provided in the Supplemental General Conditions, and limitations on the responsibilities thereof will be as provided in Paragraph 9.B.09. If the OWNER designates another representative or agent to represent the OWNER at the Work site who is not the ENGINEER's Consultant, agent or employee, the responsibilities and limitations thereon of such other individual or entity will be as provided in the Supplemental General Conditions.

D. AUTHORIZED VARIATIONS IN WORK:

9.04. The ENGINEER may authorize minor variations in the Work from the requirements of the Contract Documents which do not involve an adjustment in the Contract Price or the Contract Time and are compatible with the design concept of the completed Project as a functioning whole as indicated by the Contract Documents. These may be accomplished by a Field Order and will be binding on the OWNER and also on the CONTRACTOR who shall perform the Work involved promptly. If the OWNER or the CONTRACTOR believes that a Field Order justifies an adjustment in the Contract Price or Contract Time, or both, and the parties

are unable to agree on entitlement to or on the amount or extent, if any, of such adjustment, the OWNER or CONTRACTOR may make a Claim therefore as provided in Article 10.

E. REJECTING DEFECTIVE WORK:

9.05. The ENGINEER will have authority to disapprove or reject Work which the ENGINEER believes to be defective, or that the ENGINEER believes will not produce a completed Project that conforms to the Contract Documents or that will prejudice the integrity of the design concept of the completed Project as a functioning whole as indicated by the Contract Documents. The ENGINEER will also have authority to require special inspection or testing of the Work as provided in Article 13, whether or not the Work is fabricated, installed or completed.

F. SHOP DRAWINGS, CHANGE ORDERS AND PAYMENTS:

9.06.1. In connection with the ENGINEER's authority, and limitations thereof, as to Shop Drawings and Samples, see Article 6.

9.06.2. In connection with the ENGINEER's authority, and limitations thereof, as to design calculations and design drawings submitted in response to a delegation of professional design services, if any, see applicable paragraphs of Article 6.

9.06.3.. In connection with the ENGINEER's authority as to Change Orders, see Articles 10, 11 and 12.

9.06.4. In connection with the ENGINEER's authority as to Applications for Payment, see Article 14.

G. DETERMINATIONS FOR UNIT PRICE WORK:

9.07. The ENGINEER will determine the actual quantities and classifications of Unit Price Work performed by the CONTRACTOR. The ENGINEER will review with the CONTRACTOR the ENGINEER's preliminary determinations on such matters before rendering a written decision thereon (by recommendation of an Application for Payment or otherwise). The ENGINEER's written decisions thereon will be final and binding (except as modified by the ENGINEER to reflect changed factual conditions or more accurate data) upon the OWNER and CONTRACTOR, subject to the provisions of Article 10.

H. DECISIONS ON REQUIREMENTS OF CONTRACT DOCUMENTS AND ACCEPTABILITY OF WORK:

9.08.1. The ENGINEER will be the initial interpreter of the requirements of the Contract Documents and judge of the acceptability of the Work there under. All matters in question and other matters between the OWNER and CONTRACTOR arising prior to the date of final payment is due relating to the acceptability of the Work, and the interpretation of the requirements of the CONTRACT DOCUMENTS pertaining to the performance of the Work, will be referred initially to the ENGINEER in writing within 30 days of the event giving rise to the question.

9.08.2. The ENGINEER will, with reasonable promptness, render a written decision on the issue referred. If the OWNER or CONTRACTOR believe that any such decision entitles them to an adjustment in the Contract Price or Contract Time, or both, a Claim may be made under the applicable portion of Article 10. The date of the ENGINEER's decision shall be the date of the event giving rise to the issues referenced for the purposes of Article 10.

9.08.3 The ENGINEER's written decision on the issue referred will be final and binding upon the OWNER and CONTRACTOR, subject to the provisions of Article 10.

9.08.4. When functioning as interpreter and judge under this paragraphs 9.08, the ENGINEER will not show partiality to the OWNER or CONTRACTOR and will not be liable in connection with any interpretation or decision rendered in good faith in such capacity.

I. LIMITATIONS ON ENGINEER'S AUTHORITY AND RESPONSIBILITIES:

9.09.1. Neither the ENGINEER's authority or responsibility under this Article 9 or under any other provision of the Contract Documents nor any decision made by the ENGINEER in good faith either to exercise or not exercise such authority or responsibility or the undertaking, exercise or performance of any authority or responsibility of the ENGINEER shall create, impose or give rise to any duty owed by the ENGINEER to the CONTRACTOR, any Subcontractor, any Supplier, any other individual or entity, or to any surety for or employee or agent of any of them.

9.09.2. The ENGINEER will not supervise, direct, control or have authority over or be responsible for the CONTRACTOR's means, methods, techniques, sequences or procedures of construction, or the safety precautions and programs incident thereto, or for any failure of the CONTRACTOR to comply with Laws and Regulations applicable to the furnishing or performance of the Work. The ENGINEER will not be responsible for the CONTRACTOR's failure to perform or furnish the Work in accordance with the Contract Documents.

9.09.3. The ENGINEER will not be responsible for the acts or omissions of the CONTRACTOR or of any Subcontractor, any Supplier, or of any other individual or entity performing or furnishing any of the Work.

9.09.4. The ENGINEER's review of the final Application for Payment any accompanying documentation and all maintenance and operation instructions, schedules , guarantees, bonds and certificates of inspection, tests and approvals and other documentation required to be delivered by Article 14 will only be to determine generally that their content complies with the requirements of, and in the case of certificates of inspections, tests and approvals that the results certified indicate compliance with, the Contract Documents.

9.09.5. The limitations upon authority and responsibility set forth in this paragraph 9.09 shall also apply to the ENGINEER's Consultants, Resident Project Representative, and assistants, if any.

ARTICLE 10 --- CHANGES IN THE WORK; CLAIMS

A. AUTHORIZED CHANGES IN THE WORK

10.01.1. Without invalidating the Contract and without notice to any surety, the OWNER may, at any time or from time to time, order additions, deletions or revisions in the Work by a Change Order, or a Work Change Directive. Upon receipt of any such document, the CONTRACTOR shall promptly proceed with the Work involved which will be performed under the applicable conditions of the Contract Documents (except as otherwise specifically provided).

10.01.2. If the OWNER and CONTRACTOR are unable to agree on entitlement to, or on the amount or extent, if any, of an adjustment in the Contract Price or Contract Times, or both, that should be allowed as a result of Work Change Directive, a claim may be made therefore as provided in this Article 10.

B. UNAUTHORIZED CHANGES IN THE WORK

10.02. The CONTRACTOR shall not be entitled to an increase in the Contract Price or an extension of the Contract Times with respect to any Work performed that is not required by the Contract Documents as amended, modified and supplemented as provided in Article 3, except in the case of an emergency as provided in Article 6 or in the case of uncovering Work as provided in Article 13.

C. EXECUTION OF CHANGE ORDERS

10.03.1. The OWNER and CONTRACTOR shall execute appropriate Change Orders recommended by the ENGINEER covering:

a. changes in the Work, which are: (i) ordered by the OWNER pursuant to paragraph 10.A; (ii) required because of acceptance of defective Work under Article 13 or the OWNER's correcting defective Work under Article 13; or (iii) agreed to by the parties;

b. changes in the Contract Price or Contract Times which are agreed to by the parties, including any undisputed sum or amount of time for Work actually performed in accordance with a Work Change Directive; and

c. changes in the Contract Price or Contract Times which embody the substance of any written decision rendered by the ENGINEER pursuant to applicable portion of Paragraph 10.E; provided that, in lieu of executing any such Change Order, an appeal may be taken from any such decision in accordance with the provisions of the Contract Documents and applicable Laws and Regulations, but during any such appeal, the CONTRACTOR shall carry on the Work and adhere to the Progress Schedule as provided in Article 6.

D. NOTIFICATION TO SURETY

10.04. If notice of any change affecting the general scope of the Work or the provisions of the Contract Documents (including,

but not limited to, Contract Price or Contract Times) is required by the provisions of any Bond to be given to a surety, the giving of any such notice will be the CONTRACTOR's responsibility. The amount of each applicable Bond will be adjusted to reflect the effect of any such change.

E. CLAIMS

10.05.1. ENGINEER's Decision Required: All Claims, except those waived pursuant to Article 14, shall be referred to the ENGINEER for decision. A decision by the ENGINEER shall be required as a condition precedent to any exercise by OWNER or CONTRACTOR of any rights or remedies either may otherwise have under the Contract Documents or by Laws and Regulations in respect of such Claims.

10.05.2. Notice: Written notice stating the general nature of each Claim, shall be delivered by the claimant to the ENGINEER and the other party to the Contract promptly (but in no event later than 30 days) after the start of the event giving rise thereto. The responsibility to substantiate a Claim shall rest with the party making the Claim. Notice of the amount or extent of the Claim, with supporting data shall be delivered to the ENGINEER and the other party to the Contract within 60 days after the start of such event (unless the ENGINEER allows additional time for claimant to submit additional or more accurate data in support of such Claim). A Claim for an adjustment in Contract Price shall be prepared in accordance with the provisions of Article 12. A Claim for an adjustment in Contract Time shall be prepared in accordance with the provisions of Article 12. Each Claim shall be accompanied by the claimant's written statement that the adjustment claimed is the entire adjustment to which the claimant believes it is entitled as a result of said event. The opposing party shall submit any response to the ENGINEER and the claimant within 30 days after receipt of the claimant's last submittal (unless the ENGINEER allows additional time).

10.05.3. ENGINNEER'S Action: The ENGINEER will review each Claim and, within 30 days after receipt of the last submittal of the claimant or the last submittal of the opposing party, if any, take one of the following actions in writing:

a. deny the Claim in whole or in part,

b. approve the Claim, or

c. notify the parties that the ENGINEER is unable to resolve the Claim if, in the ENGINEER's sole discretion, it would be inappropriate for the ENGINEER to do so. For purposes of further resolution of the Claim, such notice shall be deemed a denial.

10.05.3. In the event that ENGINEER does not take action on a Claim within said 30 days, the Claim shall be deemed denied.

10.05.4. The ENGINEER's written actions or denial pursuant to this Paragraph 10.05 will be final and binding upon the OWNER and CONTRACTOR, unless the OWNER or CONTRACTOR invoke the dispute resolution procedure set forth in Article 16 within 30 days of such action or denial.

10.05.5 No Claim for an adjustment in Contract Price or Contract Times will be valid if not submitted in accordance with this Paragraph 10.05.

ARTICLE 11 --- COST OF THE WORK; ALLOWANCES; UNIT PRICE WORK

A. COST OF THE WORK

11.01.1 Costs Included: The term Cost of the Work means the sum of all costs, except those excluded in Paragraph 11.01.2, necessarily incurred and paid by the CONTRACTOR in the proper performance of the Work. When the value of any Work covered by a Change Order or when a Claim for an adjustment in Contract Price is determined on the basis of Cost of the Work, the costs to be reimbursed to the CONTRACTOR will be only those additional or incremental costs required because of the change in the Work or because of the event giving rise to the Claim. Except as otherwise may be agreed to in writing by the OWNER, such costs shall be in amounts no higher than those prevailing in the locality of the Project, shall include only the following items, and shall not include any of the costs itemized in Paragraph 11.01.2.

a. Payroll costs for employees in the direct employ of the CONTRACTOR in the performance of the Work under schedules of job classifications agreed upon by the OWNER and CONTRACTOR. Such employees shall include, without limitation, superintendents, foremen, and other personnel employed full time at the Work Site. Payroll costs for employees not employed full time on the Work shall be apportioned on the basis of their time spent on the Work. Payroll costs shall include, but not be limited to, salaries and wages plus the cost of fringe benefits, which shall include social security contributions, unemployment, excise, and payroll taxes, workers' compensation, health and retirement benefits, bonuses, sick leave, vacation and holiday pay applicable

thereto. The expenses of performing Work outside of regular working hours, on Saturday, Sunday, or legal holidays, shall be included in the above to the extent authorized by the OWNER.

b. Cost of all materials and equipment furnished and incorporated in the Work, including costs of transportation and storage thereof, and Suppliers' field services required in connection therewith. All cash discounts shall accrue to the CONTRACTOR unless the OWNER deposits funds with the CONTRACTOR with which to make payments, in which case the cash discounts shall accrue to the OWNER. All trade discounts, rebates and refunds and returns from sale of surplus materials and equipment shall accrue to Owner, and Contractor shall make provisions so that they may be obtained.

c. Payments made by the CONTRACTOR to Subcontractors for Work performed by Subcontractors. If required by the OWNER, the CONTRACTOR shall obtain competitive bids from subcontractors acceptable to the OWNER and CONTRACTOR and shall deliver such bids to the OWNER, who will then determine, with the advice of the ENGINEER, which bids, if any, will be acceptable. If any subcontract provides that the Subcontractor is to be paid on the basis of Cost of the Work plus a fee, the Subcontractor's Cost of the Work and fee shall be determined in the same manner as Contractor's Cost of the Work and fee as provided in this Article 11.

d. Costs of special consultants (including but not limited to Engineers, architects, testing laboratories, surveyors, attorneys, and accountants) employed for services specifically related to the Work.

e. Supplemental costs including the following:

(1) The proportion of necessary transportation, travel, and subsistence expenses of Contractor's employees incurred in discharge of duties connected with the Work.

(2) Cost, including transportation and maintenance, of all materials, supplies, equipment, machinery, appliances, office, and temporary facilities at the Work Site, and hand tools not owned by the workers, which are consumed in the performance of the Work, and cost, less market value, of such items used but not consumed which remain the property of the CONTRACTOR.

(3) Rentals of all construction equipment and machinery, and the parts thereof whether rented from the CONTRACTOR or others in accordance with rental agreements approved by the OWNER with the advice of the ENGINEER, and the costs of transportation, loading, unloading, assembly, dismantling, and removal thereof. All such costs shall be in accordance with the terms of said rental agreements. The rental of any such equipment, machinery, or parts shall cease when the use thereof is no longer necessary for the Work.

(4) Sales, consumer, use, and other similar taxes related to the Work, and for which the CONTRACTOR is liable, imposed by Laws and Regulations.

(5) Deposits lost for causes other than negligence of the CONTRACTOR, any Subcontractor, or anyone directly or indirectly employed by any of them or for whose acts any of them may be liable, and royalty payments and fees for permits and licenses.

(6) Losses and damages (and related expenses) caused by damage to the Work, not compensated by insurance or otherwise, sustained by the CONTRACTOR in connection with the performance of the Work (except losses and damages within the deductible amounts of property insurance established in accordance with applicable portions of Article 5), provided such losses and damages have resulted from causes other than the negligence of the CONTRACTOR, any Subcontractor, or anyone directly or indirectly employed by any of them or for whose acts any of them may be liable. Such losses shall include settlements made with the written consent and approval of the OWNER. No such losses, damages, and expenses shall be included in the Cost of the Work for the purpose of determining CONTRACTOR's fee.

(7) The cost of utilities, fuel, and sanitary facilities at the Work Site.

(8) Minor expenses such as telegrams, long distance telephone calls, telephone service at the Work Site, expresses, and similar petty cash items in connection with the Work.

(9) The costs of premiums for all bonds and insurance the CONTRACTOR is required by the CONTRACT DOCUMENTS to purchase and maintain.

11.01.2. Costs Excluded: The term Cost of the Work shall not include any of the following items:

a. Payroll costs and other compensation of the CONTRACTOR's officers, executives, principals (of partnerships and sole proprietorships), general managers, safety managers, engineers, architects, estimators, attorneys, auditors, accountants, purchasing and contracting agents, expediters, timekeepers, clerks, and other personnel employed by the CONTRACTOR, whether at the Work Site or in the CONTRACTOR's principal or branch office for general administration of the Work and not specifically included in the agreed upon schedule of job classifications referred to or specifically covered by applicable portions of Article 11, all of which are to be considered administrative costs covered by the CONTRACTOR's fee.

b. Expenses of the CONTRACTOR's principal and branch offices other than the CONTRACTOR's office at the Work Site.

c. Any part of the CONTRACTOR's capital expenses, including interest on the CONTRACTOR's capital employed for the Work and charges against the CONTRACTOR for delinquent payments.

d. Costs due to the negligence of the CONTRACTOR, any Subcontractor, or anyone directly or indirectly employed by any of them or for whose acts any of them may be liable, including but not limited to, the correction of defective Work, disposal of

materials or equipment wrongly supplied, and making good any damage to property.

e. Other overhead or general expense costs of any kind and the costs of any item not specifically and expressly included in applicable portions of Article 11.

11.01.3. CONTRACTOR's Fee: When all the Work is performed on the basis of cost-plus, the CONTRACTOR's fee shall be determined as set forth in the Agreement. When the value of any Work covered by a Change Order or when a Claim for an adjustment in Contract Price is determined on the basis of Cost of the Work, the CONTRACTOR's fee shall be determined as set forth in applicable portions of Article 12.

11.01.4. Documentation: Whenever the Cost of the Work for any purpose is to be determined pursuant to Paragraphs 11.01.1 and 11.01.2, the CONTRACTOR will establish and maintain records thereof in accordance with generally accepted accounting practices and submit in a form acceptable to the ENGINEER an itemized cost breakdown together with supporting data.

B. ALLOWANCES

11.02.1. It is understood that the CONTRACTOR has included in the Contract Price all allowances so named in the Contract Documents and shall cause the Work so covered to be performed for such sums and by such persons or entities as may be acceptable to the OWNER and ENGINEER.

11.02.2. Cash Allowances

a. The CONTRACTOR agrees that:
(1) the cash allowances include the cost to the CONTRACTOR (less any applicable trade discounts) of materials and equipment required by the allowances to be delivered at the Work Site, and all applicable taxes; and
(2) the CONTRACTOR's costs for unloading and handling on the Work Site, labor, installation , overhead, profit, and other expenses contemplated for the cash allowances have been included in the Contract Price and not in the allowances, and no demand for additional payment on account of any of the foregoing will be valid.

11.02.3. Contingency Allowance

a. The CONTRACTOR agrees that a contingency allowance, if any, is for the sole use of the OWNER to cover unanticipated costs.

11.02.4. Prior to final payment, an appropriate Change Order will be issued as recommended by the ENGINEER to reflect actual amounts due the CONTRACTOR on account of the Work covered by allowances, and the Contract Price shall be correspondingly adjusted.

C. UNIT PRICE WORK

11.03.1. Where the Contract Documents provide that all or part of the Work is to be Unit Price Work, initially the Contract Price will be deemed to include for all Unit Price Work an amount equal to the sum of the unit price for each separately identified item of Unit Price Work times the estimated quantity of each item as indicated in the Agreement.

11.03.2. The estimated quantities of items of Unit Price Work are not guaranteed and are solely for the purpose of comparison of Bids and determining an initial Contract Price. Determinations of the actual quantities and classifications of Unit Price Work performed by the CONTRACTOR will be made by the ENGINEER subject to the provisions of Article 9.

11.03.3. Each unit price will be deemed to include an amount considered by the CONTRACTOR to be adequate to cover the CONTRACTOR's overhead and profit for each separately identified item.

11.03.4. The OWNER or CONTRACTOR may make a Claim for an adjustment in the Contract Price in accordance with applicable portions of Article 10 if:

a. the quantity of any item of Unit Price Work performed by the CONTRACTOR differs materially and significantly from the estimated quantity of such item indicated in the Agreement; and

b. there is no corresponding adjustment with respect any other item of Work; and

c. the CONTRACTOR believes that the CONTRACTOR is entitled to an increase in Contract Price as a result of having incurred additional expense or the OWNER believes that the OWNER is entitled to a decrease in Contract Price and the parties are unable to agree as to the amount of any such increase or decrease.

ARTICLE 12 --- CHANGE OF CONTRACT PRICE

A. CHANGE OF CONTRACT PRICE:

12.01.1. The Contract Price may only be changed by a Change Order. Any claim for an adjustment in the Contract Price shall be based on a written notice submitted by the party making the claim to the ENGINEER and the other party to the Contract in accordance with the provisions of Article 10.

12.01.2. The value of any Work covered by a Change Order or of any claim for an adjustment in the Contract Price will be determined as follows:

a. Where the Work involved is covered by unit prices contained in the Contract Documents, by application of such unit prices to the quantities of the items involved (subject to the provisions of applicable portions of Article11); or

b. Where the Work involved is not covered by unit prices contained in the Contract Documents, by mutually agreed lump sum (which may include an allowance for overhead and profit not necessarily in accordance with Paragraph 12.01.3).

c. Where the Work involved is not covered by unit prices contained in the Contract Documents and agreement to a lump sum is not reached under this paragraph 12.01.2, on the basis of the Cost of the Work (determined as provided in applicable portion of Article 11) plus a CONTRACTOR's fee for overhead and profit (determined as provided in paragraphs 12.01.3).

12.01.3. CONTRACTOR's Fee: The CONTRACTOR's fee for overhead and profit shall be determined as follows:

a. a mutually acceptable fixed fee; or

b. if a fixed fee is not agreed upon, then a fee based on the following percentages of the various portions of the Cost of the Work:

(1) for costs incurred under Paragraphs 11.01.1.a and 11.01.1.b, the CONTRACTOR's fee shall be 15 percent;

(2) for costs incurred under Paragraph 11.01.1.c, the CONTRACTOR's fee shall be five percent;

(3) where one or more tiers of subcontractors are on the basis of Cost of the Work plus a fee and no fixed fee is agreed upon, the intent of Paragraph 12.01.3.b.(1) is that the Subcontractor who actually performs the Work, at whatever tier, will be paid a fee a 15 percent of the costs incurred by such Subcontractor under Paragraph 11.01.1.a and 11.01.1.b and that any higher tier Subcontractor and CONTRACTOR will each be paid a fee of five percent of the amount paid to the next lower tier Subcontractor;

(4) no fee shall be payable on the basis of costs itemized under Paragraphs 11.01.1.d, 11.01.1.e and 11.01.2;

(5) the amount of credit to be allowed by the CONTRACTOR to the OWNER for any change which results in a net decrease in cost will be the amount of the actual net decrease in cost plus a deduction in the CONTRACTOR's fee by an amount equal to five percent of such net decrease; and

(6) when both additions and credits are involved in any one change, the adjustment in the CONTRACTOR's fee shall be computed on the basis of the net change in accordance with Paragraphs 12.01.3.b.(1) through 12.01.3.b.(5), inclusive.

B. CHANGE OF CONTRACT TIMES

12.02.1. The Contract Times may only be changed by a Change Order. Any Claim for an adjustment in the Contract Times shall be based on written notice submitted by the party making the Claim to the ENGINEER and the other party to the Contract in accordance with the provisions of Paragraph 10.E.

12.02.2. Any adjustment of the Contract Times covered by a Change Order or any Claim for an adjustment in the Contract Times will be determined in accordance with the provisions of this Article 12.

C. DELAYS

12.03.1. Where the CONTRACTOR is prevented from completing any part of the Work within the Contract Times due to delay beyond the control of the CONTRACTOR, the Contract Times will be extended in an amount equal to the time lost due to such delay if a claim is made therefore as provided in paragraph 12.02.1. Delays beyond the control of the CONTRACTOR shall include, but not be limited to, acts or neglect by the OWNER, acts or neglect of utility owners or other contractors performing other work as contemplated by Article 7, fires, floods, epidemics, abnormal weather conditions or acts of God.

12.03.2. If the OWNER, ENGINEER, or other contractors or utility owners performing other work for the OWNER as contemplated by Article 7, or anyone for whom the OWNER is responsible, delays, disrupts, or interferes with the performance or progress of the Work, then the CONTRACTOR shall be entitled to an equitable adjustment in the Contract Price or the Contract Times, or both, the CONTRACTOR's entitlement to an adjustment of the Contract Times is conditioned on such adjustment being essential to the CONTRACTOR's ability to complete the Work within the Contract Times.

12.03.3. If the CONTRACTOR is delayed in the performance or progress of the Work by fire, flood, epidemic, abnormal weather conditions, acts of God, acts or failures to act of utility owners not under the control of the OWNER, or other causes not the

fault of and beyond control of the OWNER and CONTRACTOR, then the CONTRACTOR shall be entitled to an equitable adjustment in Contract Times, if such adjustment is essential to the CONTRACTOR's ability to complete the Work within the Contract Times. Such an adjustment shall be the CONTRACTOR's sole and exclusive remedy for the delays described in this paragraph 12.03.3.

12.03.4. The OWNER, ENGINEER and the related entities of each of them shall not be liable to the CONTRACTOR for any claims, costs, losses, or damages (including but not limited to all fees and charges of engineers, attorneys, and other professionals and all court or arbitration or other dispute resolution costs) sustained by the CONTRACTOR on or in connection with any other project or anticipated project.

12.03.5. The CONTRACTOR shall not be entitled to an adjustment in Contract Price or Contract Times for delays within the control of the CONTRACTOR. Delays attributable to and within the control of a Subcontractor or Supplier shall be deemed to be delays within the control of the CONTRACTOR.

ARTICLE 13 --- TESTS AND INSPECTIONS; CORRECTION, REMOVAL OR ACCEPTANCE OF DEFECTIVE WORK

A. NOTICE OF DEFECTS:

13.01. Prompt notice of all defective Work of which the OWNER or ENGINEER have actual knowledge will be given to the CONTRACTOR. All defective Work may be rejected, corrected or accepted as provided in this Article 13.

B. ACCESS TO WORK:

13.02. The OWNER, ENGINEER, ENGINEER's Consultants, other representatives and personnel of the OWNER, independent testing laboratories and governmental agencies with jurisdictional interests will have access to the Work site and the Work at reasonable times for their observation, inspecting and testing. The CONTRACTOR shall provide them proper and safe conditions for such access and advise them of the CONTRACTOR's site safety procedures and programs so that they may comply therewith as applicable.

C. TESTS AND INSPECTIONS:

13.03.1. The CONTRACTOR shall give the ENGINEER timely notice of readiness of the Work for all required inspections, tests or approvals, and shall cooperate with inspection and testing personnel to facilitate required inspections or tests.

13.03.2. The OWNER shall employ and pay for the services of an independent testing laboratory to perform all inspections, tests or approvals required by the Contract Documents except:

a. for inspections, tests or approvals covered by paragraph 13.03.3 and 13.03.4 below;

b. that costs incurred in connection with tests or inspections conducted pursuant to paragraph 13.04.2 shall be paid as provided in said paragraph 13.04.3; and

c. as otherwise specifically provided in the Contract Documents.

13.03.3. If Laws and Regulations of any public body having jurisdiction require any Work (or part thereof) specifically to be inspected, tested or approved by an employee or other representative of such public body, the CONTRACTOR shall assume full responsibility for arranging and obtaining such inspections, tests or approvals, pay all costs in connection therewith, and furnish the ENGINEER the required certificates of inspection, or approval.

13.03.4. The CONTRACTOR shall be responsible for arranging and obtaining and shall pay all costs in connections with any inspections, tests or approval required in connection with the OWNER's or ENGINEER's acceptance of materials or equipment to be incorporated in the Work; or acceptance of materials, mix designs, or equipment submitted for approval prior to the CONTRACTOR's purchase thereof for incorporation in the Work. Such inspections, tests, or approvals shall be performed by organizations acceptable to the OWNER and ENGINEER.

13.03.5. If any Work (or the work of others) that is to be inspected, tested or approved is covered by the CONTRACTOR without written concurrence of the ENGINEER, it must, if requested by the ENGINEER, be uncovered for observation.

13.03.6. Uncovering Work as provided in paragraph 13.03.5 shall be at the CONTRACTOR's expense, unless the CONTRACTOR has given the ENGINEER timely notice of the CONTRACTOR's intention to cover the same and the ENGINEER has not acted with reasonable promptness in response to such notice.

D. UNCOVERING WORK:

13.04.1. If any Work is covered contrary to the written request of the ENGINEER, it must, if requested by the ENGINEER,

be uncovered for the ENGINEER's observation and replaced at the CONTRACTOR's expense.

13.04.2. If the ENGINEER considers it necessary or advisable that covered Work be observed by the ENGINEER or inspected or tested by others, the CONTRACTOR, at the ENGINEER's request, shall uncover, expose or otherwise make available for observation, inspection or testing as the ENGINEER may require, that portion of the Work in question, furnishing all necessary labor, material and equipment.

13.04.3. If it is found that uncovered Work is defective, the CONTRACTOR shall pay all claims, costs, losses and damages (including but not limited to all fees and charges of engineers, attorneys, and other professional and all court or arbitration or other dispute resolution costs) arising out of or relating to such uncovering, exposure, observation, inspection and testing and of satisfactory replacement or reconstruction, (including but not limited to all costs of repair or replacement of work of others); and the OWNER shall be entitled to an appropriate decrease in the Contract Price. If the parties are unable to agree as to the amount thereof, the OWNER may make a claim therefore as provided in Article 10.

13.04.4. If, the uncovered Work is not found to be defective, the CONTRACTOR shall be allowed an increase in the Contact Price or an extension of Contract Times, or both, directly attributable to such uncovering, exposure, observation, inspection, testing, replacement, and reconstruction. If the parties are unable to agree as to the amount or extent thereof, the CONTRACTOR may make a claim therefore as provided in Article 10.

E. OWNER MAY STOP THE WORK:

13.05. If the Work is defective, or the CONTRACTOR fails to supply sufficient skilled workers or suitable materials or equipment, or fails to furnish or perform the Work in such a way that the completed Work will conform to the Contract Documents, the OWNER may order the CONTRACTOR to stop the Work, or any portion thereof, until the cause for such order has been eliminated; however, this right of the OWNER to stop the Work shall not give rise to any duty on the part of the OWNER to exercise this right for the benefit of the CONTRACTOR, any Subcontractor, any Supplier, any other individual or entity, or any surety for, or employee or agent of any of them.

F. CORRECTION OR REMOVAL OF DEFECTIVE WORK:

13.06.1. Promptly after receipt of notice, the CONTRACTOR shall correct all defective Work, whether or not fabricated, installed or completed, or, if the Work has been rejected by the ENGINEER, remove it from the Project and replace it with Work that is not defective. The CONTRACTOR shall pay all claims, costs, losses and damages (including but not limited to all fees and charges of engineers, attorneys and other professionals and all court or arbitration or other dispute resolution costs) arising out of or relating to such correction or removal (including but not limited to all costs of repair or replacement of work of others).

13.06.2. When correcting defective Work under the terms of this Paragraph 13.06 or Paragraph 13.07, the CONTRACTOR shall take no action that would void or otherwise impair the OWNER's special warranty and guarantee, if any, on said Work.

G. CORRECTION PERIOD:

13.07.1. If within one year after the date of Substantial Completion (or such longer period of time as may be prescribed by the terms of any applicable special guarantee required by the Contract Documents) or by any specific provision of the Contract Documents, any Work is found to be defective, or if the repair of any damages to the land or areas made available for the CONTRACTOR's use by the OWNER or permitted by Laws and Regulations as contemplated in applicable portions of Article 6 is found to be defective, the CONTRACTOR shall promptly, without cost to the OWNER and in accordance with the OWNER's written instructions:

a. repair such defective land or areas; or

b. correct such defective Work; or

c. if the defective Work has been rejected by the OWNER, remove it from the Project and replace it with Work that is not defective; and

d. satisfactorily correct or remove and replace any damage to other Work, to the work of others or other land or areas resulting there from.

13.07.2. If the CONTRACTOR does not promptly comply with the terms of the OWNER's written instructions, or in an emergency where delay would cause serious risk of loss or damage, the OWNER may have the defective Work corrected or repaired or may have the rejected Work removed and replaced. All claims, costs, losses and damages (including but not limited to all fees and charges of engineers, attorneys, and other professional and all court or arbitration or other dispute resolution costs)

arising out of or relating to such correction or repair or such removal and replacement (including but not limited to all costs of repair or replacement of work of others) will be paid by the CONTRACTOR.

13.07.3. In special circumstances, where a particular item of equipment is placed in continuous service before Substantial Completion of all the Work, the correction period for that item may start to run from an earlier date if so provided in the Specifications.

13.07.4. Where defective Work (and damage to other Work resulting there from) has been corrected or removed and replaced under this paragraph 13.07, the correction period hereunder with respect to such Work will be extended for an additional period of one year after such correction or removal and replacement has been satisfactorily completed.

13.07.5. The CONTRACTOR's obligations under this Paragraph 13.07 are in addition to any other obligation or warranty. The provisions of this Paragraph 13.07 shall not be construed as a substitute for or a waiver of the provisions of any applicable statute of limitation or repose.

H. ACCEPTANCE OF DEFECTIVE WORK:

13.08. If, instead of requiring correction or removal and replacement of defective Work, the OWNER (and, prior to the ENGINEER's recommendation of final payment, the ENGINEER) prefers to accept it, the OWNER may do so. The CONTRACTOR shall pay all claims, costs, losses and damages (including but not limited to all fees and charges of engineers, attorneys, and other professionals and all court or arbitration or other dispute resolution costs) attributable to the OWNER's evaluation of and determination to accept such defective Work (such costs to be approved by the ENGINEER as to reasonableness) and the diminished value of the Work to the extent not otherwise paid by the CONTRACTOR pursuant to this sentence. If any such acceptance occurs prior to the ENGINEER's recommendation of final payment, a Change Order will be issued incorporating the necessary revisions in the Contract Documents with respect to the Work; and the OWNER shall be entitled to an appropriate decrease in the Contract Price, reflecting the diminished value of Work so accepted. If the parties are unable to agree as to the amount thereof, the OWNER may make a claim therefore as provided in Article 10. If the acceptance occurs after such a recommendation, an appropriate amount will be paid by the CONTRACTOR to the OWNER.

I. OWNER MAY CORRECT DEFECTIVE WORK:

13.09.1. If the CONTRACTOR fails, within a reasonable time after written notice from the ENGINEER to correct defective Work or to remove and replace rejected Work as required by the ENGINEER in accordance with paragraph 13.06.1, or if the CONTRACTOR fails to perform the Work in accordance with the Contract Documents, or if the CONTRACTOR fails to comply with any other provision of the Contract Documents, the OWNER may, after seven days written notice to the CONTRACTOR, correct and remedy any such deficiency.

13.09.2. In exercising the rights and remedies under this Paragraph 13.09, the OWNER shall proceed expeditiously. In connection with such corrective and remedial action, the OWNER may exclude the CONTRACTOR from all or part of the Work site and suspend the CONTRACTOR's services related thereto, take possession of the CONTRACTOR's tools, appliances, construction equipment and machinery at the Work site, and incorporate in the Work all materials and equipment stored at the Work site or for which the OWNER has paid the CONTRACTOR but which are stored elsewhere. The CONTRACTOR shall allow the OWNER, the OWNER's representatives, agents and employees, OWNER's other contractors and the ENGINEER and ENGINEER's Consultants access to the Work site to enable the OWNER to exercise the rights and remedies under this Paragraph.

13.09.3 All claims, costs, losses and damages (including but not limited to all fees and charges of engineers, attorneys, and other professionals and all court or arbitration or other dispute resolution costs) incurred or sustained by the OWNER in exercising such rights and remedies under this Paragraph 13.09 will be charged against the CONTRACTOR, and a Change Order will be issued incorporating the necessary revisions in the Contract Documents with respect to the Work; and the OWNER shall be entitled to an appropriate decrease in the Contract Price. If the parties are unable to agree as to the amount of the adjustment, the OWNER may make a claim therefore as provided in Article 10. Such claims, costs, losses and damages will include but not be limited to all costs of repair, or replacement of work of others destroyed or damaged by corrections, removal or replacement of the CONTRACTOR's defective Work.

13.09.4. The CONTRACT shall not be allowed an extension of the Contract Times because of any delay in performance of the Work attributable to the exercise by the OWNER of the OWNER's rights and remedies under this Paragraph 13.09.

ARTICLE 14 --- PAYMENTS TO CONTRACTOR AND COMPLETION

A. SCHEDULE OF VALUES:

14.01. The Schedule of values established as provided in Article 2 will serve as the basis for progress payments and will be incorporated into a form of Application for Payment acceptable to the ENGINEER. Progress payments on account of Unit Price

Work will be based on the number of units completed.

B. PROGRESS PAYMENT:

14.02.1. Applications for Payments.

a. At least 20 days before the date established in the Agreement for each progress payment (but not more often than once a month), the CONTRACTOR shall submit to the ENGINEER for review an Application for Payment filled out and signed by the CONTRACTOR covering the Work completed as of the date of the Application and accompanied by such supporting documentation as is required by the Contract Documents. If payment is requested on the basis of materials and equipment not incorporated in the Work but delivered and suitably stored at the Work site or at another location agreed to in writing, the Application for Payment shall also be accompanied by a bill of sale, invoice or other documentation warranting that the CONTRACTOR has received the materials and equipment, free and clear of all Liens, charges, security interest, and encumbrances (which are hereinafter in these General Conditions referred to as "Liens") and evidence that the materials and equipment are covered by appropriate property insurance and other arrangements to protect the OWNER's interest therein, all of which will be satisfactory to the OWNER.

(1) Unless otherwise prescribed by law, the Value of Materials stored at the Site shall by 80% of the value of such materials.

b. Beginning with the second Application for Payment, each Application shall include an affidavit of the CONTRACTOR stating that all previous progress payments received on account of the Work have been applied on account to discharge the CONTRACTOR's legitimate obligations associated with prior Applications for Payment.

c. The amount of retainage with respect to progress payments will be as stipulated in the Agreement.

14.02.2. Review of Applications.

a. The ENGINEER will, within ten days after receipt of each Application for Payment, either indicate in writing a recommendation of payment and present the Application to the OWNER, or return the Application to the CONTRACTOR indicating in writing the ENGINEER's reason for refusing to recommend payment. In the latter case, the CONTRACTOR may make the necessary corrections and resubmit the Application.

b. The ENGINEER's recommendation of any payment requested in an Application for Payment will constitute a representation by the ENGINEER to the OWNER, based on the ENGINEER's observations on the Work site of the executed Work as an experienced and qualified design professional and on the ENGINEER's review of the Application for Payment and the accompanying data and schedules, that to the best of the ENGINEER's knowledge, information and belief:

(1) that the Work has progressed to the point indicated;

(2) the quality of the Work is generally in accordance with the Contract Documents (subject to an evaluation of the Work as a functioning whole prior to or upon Substantial Completion, to the results of any subsequent tests called for in the Contract Documents, to a final determination of quantities and classifications for Unit Price Work under applicable portions of Article 9, and to any other qualifications stated in the recommendation); and

(3) the conditions precedent to the CONTRACTOR's being entitled to such payment appear to have been fulfilled in so far as it is the ENGINEER's responsibility to observe the Work.

c. By recommending any such payment the ENGINEER will not thereby be deemed to have represented that:

(1) inspections made to check the quality or the quantity of the Work as it has been performed have been exhaustive, extended to every aspect of the Work in progress, or involved detailed inspections of the Work beyond the responsibilities specifically assigned to the ENGINEER in the Contract Documents; or

(2) that there may not be other matters or issues between the parties that might entitle the CONTRACTOR to be paid additionally by the OWNER or entitle the OWNER to withhold payment to the CONTRACTOR.

d. Neither the ENGINEER's review of the CONTRACTOR's Work for the purposes of recommending payments nor ENGINEER's recommendation of any payment, including final payment, will impose responsibility on the ENGINEER:

(1) to supervise, direct, or control the Work; or

(2) for the means, methods, techniques, sequences or procedures of construction, or the safety precautions and programs incident thereto; or

(3) for the CONTRACTOR's failure to comply with Laws and Regulations applicable to the CONTRACTOR's performance of the Work; or

(4) to make any examination to ascertain how or for what purposes the CONTRACTOR has used the moneys paid on account of the Contract Price; or.

(5) to determine that title to any of the Work, materials, or equipment has passed to the OWNER free and clear of any Liens.

e. The ENGINEER may refuse to recommend the whole or any part of any payment if, in the ENGINEER's opinion, it

would be incorrect to make such representations to the OWNER stated in Paragraph 14.02.2.b. The ENGINEER may also refuse to recommend any such payment, or, because of subsequently discovered evidence or the results of subsequent inspections or tests, revise or revoke any such payment previously made, to such extent as may be necessary in the ENGINEER's opinion to protect the OWNER from loss because:

(1) the Work is defective, or completed Work has been damaged requiring correction or replacement;
(2) the Contract Price has been reduced by Change Orders;
(3) the OWNER has been required to correct defective Work or complete Work in accordance with paragraph 13.09;
(4) the ENGINEER has actual knowledge of the occurrence of any of the events enumerated in paragraphs 15.02.1.

14.02.3. Payment Becomes Due.

a. Ten days after presentation of the Application for Payment to the OWNER with the ENGINEER's recommendation, the amount recommended will (subject to the provisions of Paragraph 14.02.4) become due, and when due will be paid by the OWNER to the CONTRACTOR.

14.03.4. Reduction in Payment.

a. The OWNER may refuse to make payment of the full amount recommended by the ENGINEER because:

(1) claims have been made against the OWNER on account of the CONTRACTOR's performance or furnishing of the Work;
(2) Liens have been filed in connection with the Work, except where the CONTRACTOR has delivered a specific bond satisfactory to the OWNER to secure the satisfaction and discharge of such Liens;
(3) there are other items entitling the OWNER to a set-off against the amount recommended; or
(4) the OWNER has actual knowledge of the occurrence of any of the events enumerated in appropriate portions of paragraphs 14.02.2, or paragraph 15.02.1.

b. If the OWNER refuses to make payment of the full amount recommended by the ENGINEER, the OWNER will give the CONTRACTOR immediate written notice (with a copy to the ENGINEER) stating the reasons for such action and promptly pay the CONTRACTOR any amount remaining after deduction of the amount so withheld. The OWNER shall promptly pay the CONTRACTOR the amount so withheld, or any adjustment thereto agreed to by the OWNER and CONTRACTOR, when the CONTRACTOR corrects to the OWNER's satisfaction the reasons for such action.

c. If it is subsequently determined that the OWNER's refusal was not justified, the amount wrongfully withheld shall be treated as an amount due as determined by Paragraph 14.02.3.a.

C. CONTRACTOR'S WARRANTY OF TITLE

14.03. The CONTRACTOR warrants and guarantees that title to all Work, materials, and equipment covered by any Application for Payment, whether incorporated in the Project or not, will pass to the OWNER no later that the time of payment free and clear of all Liens.

D. SUBSTANTIAL COMPLETION:

14.04.1. When the CONTRACTOR considers the entire Work ready for its intended use, the CONTRACTOR shall notify the OWNER and ENGINEER in writing that the entire Work is substantially complete (except for items specifically listed by the CONTRACTOR as incomplete) and request that the ENGINEER issue a certificate of Substantial Completion.

14.04.2. Promptly after the CONTRACTOR's notification, the OWNER, CONTRACTOR, and ENGINEER shall make an inspection of the Work to determine the status of completion. If the ENGINEER does not consider the Work substantially complete, the ENGINEER will notify the CONTRACTOR in writing giving the reason therefore.

14.04.3. If the ENGINEER considers the Work substantially complete, the ENGINEER will deliver to the OWNER a tentative certificate of Substantial Completion which shall fix the date of the Substantial Completion. There shall be attached to the certificate a tentative list of items to be completed or corrected before final payment. The OWNER shall have seven days after receipt of the tentative certificate during which to make written objection to the ENGINEER as to any provisions of the certificate or attached list. If, after considering such objections, the ENGINEER concludes that the Work is not substantially complete, the ENGINEER will within 14 days after submission of the tentative certificate to the OWNER notify the CONTRACTOR in writing, stating the reasons therefore. If, after consideration of the OWNER's objections, the ENGINEER considers the Work substantially complete, the ENGINEER will within said 14 days execute and deliver to the OWNER and CONTRACTOR a definitive certificate of Substantial Completion (with a revised tentative list of items to be completed or corrected) reflecting such changes from the tentative certificate as the ENGINEER believes justified after consideration of any objections from the OWNER.

14.04.4. At the time of delivery of the tentative certificate of Substantial Completion, the ENGINEER will deliver to the OWNER and CONTRACTOR a written recommendation as to division of responsibilities pending final payment between the OWNER and CONTRACTOR with respect to security, operation, safety, and protection of the Work, maintenance, heat, utilities, insurance and warranties and guarantees. Unless the OWNER and CONTRACTOR agree otherwise in writing and so inform the ENGINEER prior to the ENGINEER's issuing the definitive certificate of Substantial Completion, the ENGINEER's aforesaid

would be incorrect to make such representations to the OWNER stated in Paragraph 14.02.2.b. The ENGINEER may also refuse to recommend any such payment, or, because of subsequently discovered evidence or the results of subsequent inspections or tests, revise or revoke any such payment previously made, to such extent as may be necessary in the ENGINEER's opinion to protect the OWNER from loss because:

(1) the Work is defective, or completed Work has been damaged requiring correction or replacement;
(2) the Contract Price has been reduced by Change Orders;
(3) the OWNER has been required to correct defective Work or complete Work in accordance with paragraph 13.09;
(4) the ENGINEER has actual knowledge of the occurrence of any of the events enumerated in paragraphs 15.02.1.

14.02.3. Payment Becomes Due.

a. Ten days after presentation of the Application for Payment to the OWNER with the ENGINEER's recommendation, the amount recommended will (subject to the provisions of Paragraph 14.02.4) become due, and when due will be paid by the OWNER to the CONTRACTOR.

14.03.4. Reduction in Payment.

a. The OWNER may refuse to make payment of the full amount recommended by the ENGINEER because:

(1) claims have been made against the OWNER on account of the CONTRACTOR's performance or furnishing of the Work;
(2) Liens have been filed in connection with the Work, except where the CONTRACTOR has delivered a specific bond satisfactory to the OWNER to secure the satisfaction and discharge of such Liens;
(3) there are other items entitling the OWNER to a set-off against the amount recommended; or
(4) the OWNER has actual knowledge of the occurrence of any of the events enumerated in appropriate portions of paragraphs 14.02.2, or paragraph 15.02.1.

b. If the OWNER refuses to make payment of the full amount recommended by the ENGINEER, the OWNER will give the CONTRACTOR immediate written notice (with a copy to the ENGINEER) stating the reasons for such action and promptly pay the CONTRACTOR any amount remaining after deduction of the amount so withheld. The OWNER shall promptly pay the CONTRACTOR the amount so withheld, or any adjustment thereto agreed to by the OWNER and CONTRACTOR, when the CONTRACTOR corrects to the OWNER's satisfaction the reasons for such action.

c. If it is subsequently determined that the OWNER's refusal was not justified, the amount wrongfully withheld shall be treated as an amount due as determined by Paragraph 14.02.3.a.

C. CONTRACTOR'S WARRANTY OF TITLE

14.03. The CONTRACTOR warrants and guarantees that title to all Work, materials, and equipment covered by any Application for Payment, whether incorporated in the Project or not, will pass to the OWNER no later that the time of payment free and clear of all Liens.

D. SUBSTANTIAL COMPLETION:

14.04.1. When the CONTRACTOR considers the entire Work ready for its intended use, the CONTRACTOR shall notify the OWNER and ENGINEER in writing that the entire Work is substantially complete (except for items specifically listed by the CONTRACTOR as incomplete) and request that the ENGINEER issue a certificate of Substantial Completion.

14.04.2. Promptly after the CONTRACTOR's notification, the OWNER, CONTRACTOR, and ENGINEER shall make an inspection of the Work to determine the status of completion. If the ENGINEER does not consider the Work substantially complete, the ENGINEER will notify the CONTRACTOR in writing giving the reason therefore.

14.04.3. If the ENGINEER considers the Work substantially complete, the ENGINEER will deliver to the OWNER a tentative certificate of Substantial Completion which shall fix the date of the Substantial Completion. There shall be attached to the certificate a tentative list of items to be completed or corrected before final payment. The OWNER shall have seven days after receipt of the tentative certificate during which to make written objection to the ENGINEER as to any provisions of the certificate or attached list. If, after considering such objections, the ENGINEER concludes that the Work is not substantially complete, the ENGINEER will within 14 days after submission of the tentative certificate to the OWNER notify the CONTRACTOR in writing, stating the reasons therefore. If, after consideration of the OWNER's objections, the ENGINEER considers the Work substantially complete, the ENGINEER will within said 14 days execute and deliver to the OWNER and CONTRACTOR a definitive certificate of Substantial Completion (with a revised tentative list of items to be completed or corrected) reflecting such changes from the tentative certificate as the ENGINEER believes justified after consideration of any objections from the OWNER.

14.04.4. At the time of delivery of the tentative certificate of Substantial Completion, the ENGINEER will deliver to the OWNER and CONTRACTOR a written recommendation as to division of responsibilities pending final payment between the OWNER and CONTRACTOR with respect to security, operation, safety, and protection of the Work, maintenance, heat, utilities, insurance and warranties and guarantees. Unless the OWNER and CONTRACTOR agree otherwise in writing and so inform the ENGINEER prior to the ENGINEER's issuing the definitive certificate of Substantial Completion, the ENGINEER's aforesaid

recommendation will be binding on the OWNER and CONTRACTOR until final payment.

14.04.5. The OWNER shall have the right to exclude the CONTRACTOR from the Work site after the date of Substantial Completion, subject to allowing the CONTRACTOR reasonable access to complete or correct items on the tentative list.

E. PARTIAL UTILIZATION:

14.05.1. Prior to Substantial Completion of all the Work, the OWNER may use or occupy any substantially completed part of the Work which has specifically been identified in the Contract Documents, or which the OWNER, ENGINEER, and CONTRACTOR agree constitutes a separately functioning and usable part of the Work that can be used by the OWNER for its intended purpose without significant interference with the CONTRACTOR's performance of the remainder of the Work, subject to the following conditions:

a. The OWNER at any time may request the CONTRACTOR in writing to permit the OWNER to use any such part of the Work which the OWNER believes to be ready for its intended use and substantially complete. If and when the CONTRACTOR agrees that such part of the Work is substantially complete, the CONTRACTOR will certify to the OWNER and ENGINEER that such part of the Work is substantially complete and request the ENGINEER to issue a certificate of Substantial Completion for that part of the Work.

b. The CONTRACTOR at any time may notify the OWNER and ENGINEER in writing that the CONTRACTOR considers any such part of the Work ready for its intended use and substantially complete and request the ENGINEER to issue a certificate of Substantial Completion for that part of the Work.

c. Within a reasonable time after either such request, the OWNER, CONTRACTOR and ENGINEER shall make an inspection of that part of the Work to determine its status of completion. If the ENGINEER does not consider that part of the Work to be substantially complete, the ENGINEER will notify the OWNER and CONTRACTOR in writing giving the reasons therefore. If the ENGINEER considers that part of the Work to be substantially complete, the provisions of paragraph 14.04 will apply with respect to certification of Substantial Completion of that part of the Work and the division of responsibility in respect thereof and access thereto.

d. No use or occupancy or separate operation of part of the Work may occur prior to compliance with the requirements of paragraph 5.10 regarding property insurance.

F. FINAL INSPECTION:

14.07. Upon written notice from the CONTRACTOR that the entire Work or an agreed portion thereof is complete, the ENGINEER will promptly make a final inspection with the OWNER and CONTRACTOR and will notify the CONTRACTOR in writing of all particulars in which this inspection reveals that the Work is incomplete or defective. The CONTRACTOR shall immediately take such measure as are necessary to complete such Work or remedy such deficiencies.

G. FINAL PAYMENT:

14.07.1. Application for Payment.

a. After the CONTRACTOR has, in the opinion of the ENGINEER, satisfactorily completed all corrections identified during the final inspection and has delivered in accordance with the Contract Documents all maintenance and operating instructions, schedules, guarantees, Bonds, certificates or other evidence of insurance certificates of inspection, marked-up record documents (as provided in paragraph 6.12) and other documents, the CONTRACTOR may make application for final payment following the procedure for progress payments.

b. The final Application for Payment shall be accompanied (except as previously delivered) by:

(1) all documentation called for in the Contract Documents, including but not limited to the evidence of insurance required by subparagraph 5.04.2.g;

(2) consent of the surety, if any, to final payment;

(3) a list of all claims against the OWNER that the CONTRACTOR believes are unsettled; and

(4) complete and legally effective releases or waivers (satisfactory to the OWNER) of all Lien rights arising out of or Lien filed in connection with the Work.

c. In lieu of such releases or waivers of Liens specified in Paragraph 14.07.1.b and as approved by the OWNER, the CONTRACTOR may furnish receipts or releases in full and an affidavit of the CONTRACTOR that: (i) the releases and receipts include all labor, services, materials and equipment for which a Lien could be filed; and (ii) all payrolls, material and equipment bills, and other indebtedness connected with the Work for which the OWNER or OWNER's property might in any way be responsible, have been paid or otherwise satisfied. If any Subcontractor or Supplier fails to furnish such a release or receipt in full, the CONTRACTOR may furnish a Bond or other collateral satisfactory to the OWNER to indemnify the OWNER against any Lien.

14.07.2. Engineer's Review of Application and Acceptance.

a. If, on the basis of the ENGINEER's observation of the Work during construction and final inspection, and the ENGINEER's review of the final Application for Payment and accompanying documentation as required by the Contract Documents, the ENGINEER is satisfied that the Work has been completed and the CONTRACTOR's other obligations under the Contract Documents have been fulfilled, the ENGINEER will, within ten days after receipt of the final Application for Payment, indicate in writing the ENGINEER's recommendation of payment and present the Application to the OWNER for payment. At the same time the ENGINEER will also give written notice to the OWNER and CONTRACTOR that the Work is acceptable subject to the provisions of paragraph 14.09. Otherwise, the ENGINEER will return the Application to the CONTRACTOR, indicating in writing the reasons for refusing to recommend final payment, in which case the CONTRACTOR shall make the necessary corrections and resubmit the Application.

14.07.3. Payment Becomes Due.

a. Thirty days after presentation to the OWNER of the Application for Payment and accompanying documentation, the amount recommended by the ENGINEER, less any sum the OWNER is entitled to set off against the ENGINEER's recommendation, including but not limited to liquidated damages, will become due, and will be paid by the OWNER to the CONTRACTOR.

H. FINAL COMPLETION DELAYED

14.08. If, though no fault of the CONTRACTOR, final completion of the Work is significantly delayed, and if the ENGINEER so confirms, the OWNER shall, upon receipt of the CONTRACTOR's final Application for Payment (for Work fully completed and accepted) and recommendation of the ENGINEER, and without terminating the Contract, make payment of the balance due for that portion of the Work fully completed and accepted. If the remaining balance to be held by the OWNER for Work not fully completed or corrected is less than the retainage stipulated in the Agreement, and if Bonds have been furnished as required in paragraph 5.01, the written consent of the surety to the payment of the balance due for that portion of the Work fully completed and accepted shall be submitted by the CONTRACTOR to the ENGINEER with the Application for such payment. Such payment shall be made under the terms and conditions governing final payment, except that it shall not constitute a waiver of claims.

I. WAIVER OF CLAIMS:

14.09.1. The making and acceptance of final payment will constitute:

a. A waiver of all claims by the OWNER against the CONTRACTOR, except claims arising from unsettled Liens, from defective Work appearing after final inspection pursuant to paragraph 14.06, from failure to comply with the Contract Documents or the term of any special guarantees specified therein, or from CONTRACTOR's continuing obligations under the Contract Documents; and

b. A waiver of all claims by the CONTRACTOR against the OWNER other than those previously made in accordance with the requirements herein and expressly acknowledged by the OWNER inwriting and still unsettled.

ARTICLE 15 --- SUSPENSION OF WORK AND TERMINATION

A. OWNER MAY SUSPEND WORK:

15.01. At any time and without cause, the OWNER may suspend the Work or any portion thereof for a period of not more than 90 consecutive days by notice in writing to the CONTRACTOR and ENGINEER which will fix the date on which the Work will be resumed. The CONTRACTOR shall resume the Work on the date so fixed. The CONTRACTOR shall be allowed an adjustment in the Contract Price or an extension of the Contract Times, or both, directly attributable to any such suspension if the CONTRACTOR makes a claim therefore as provided in Paragraph 10.05.

B. OWNER MAY TERMINATE FOR CAUSE:

15.02.1. the occurrence of any one or more of the following events will justify termination for cause:
a. The CONTRACTOR's persistent failure to perform the Work in accordance with the Contract Documents (including, but not limited to, failure to supply sufficient skilled workers or suitable materials or equipment or failure to adhere to the progress schedule established under paragraph 2.07 as adjusted from time to time pursuant to paragraph 6.04);

b. The CONTRACTOR's disregard of Laws or Regulations of any public body having jurisdiction;

c. The CONTRACTOR's disregard of the authority of the ENGINEER; or

d. The CONTRACTOR's violation in any substantial way of any provisions of the Contract Documents.

15.02.2. If one or more of the events identified in Paragraph 15.02.1 occur, the OWNER may, after giving the CONTRACTOR (and surety) seven days written notice of its intent to terminate the services of the CONTRACTOR:

a. exclude the CONTRACTOR from the Work site, and take possession of the Work and of all the CONTRACTOR's tools, appliances, construction equipment and machinery at the Work site, and use the same to the full extent they could be used by the CONTRACTOR (without liability to the CONTRACTOR for trespass or conversion),

b. incorporate in the Work all materials and equipment stored at the Work site or for which the OWNER has paid the CONTRACTOR but which are stored elsewhere, and

c. complete the Work as the OWNER may deem expedient.

15.02.3. If the OWNER proceeds as provided in Paragraph 15.02.2, the CONTRACTOR shall not be entitled to receive any further payment until the Work in completed. If the unpaid balance of the Contract Price exceeds all claims, costs, losses and damages (including but not limited to all fees and charges of engineers, attorneys, and other professionals and all court or arbitration or other dispute resolution costs) sustained by the OWNER arising out of or resulting from completing the Work, such excess will be paid to the CONTRACTOR. If such claims, costs, losses and damages exceed such unpaid balance, the CONTRACTOR shall pay the difference to the OWNER. Such claims, costs, losses and damages incurred by the OWNER will be reviewed by the ENGINEER as to their reasonableness and when so approved by the ENGINEER, incorporated in a Change Order. When exercising any rights or remedies under this paragraph the OWNER shall not be required to obtain the lowest price for the Work performed.

15.02.4. Notwithstanding Paragraphs 15.02.2 and 15.02.3, the CONTRACTOR's services will not be terminated if the CONTRACTOR begins, within seven days of receipt of notice of intent to terminate, to correct its failure to perform and proceeds diligently to cure such failure within no more that 30 days of receipt of said notice.

15.02.5. Where the CONTRACTOR's services have been so terminated by the OWNER, the termination will not affect any rights or remedies of the OWNER against the CONTRACTOR then existing or which may thereafter accrue. Any retention or payment of the moneys due the CONTRACTOR by the OWNER will not release the CONTRACTOR from liability.

15.02.6. If and to the extent that the CONTRACTOR has provided a performance bond under the provisions of Paragraph 5.01.1, the termination procedures of that bond shall supersede the provisions of Paragraph 15.02.2 and 15.02.3.

C. OWNER MAY TERMINATE FOR CONVENIENCE

15.03.1. Upon seven days written notice to the CONTRACTOR and ENGINEER, the OWNER may, without cause and without prejudice to any other right or remedy of the OWNER, terminate the Contract. In such case, the CONTRACTOR shall be paid for (without duplication of any items):

a. completed and acceptable Work executed in accordance with the Contract Documents prior to the effective date of termination, including fair and reasonable sums for overhead and profit on such Work;

b. expenses sustained prior to the effective date of termination in performing services and furnishing labor, materials or equipment as required by the Contract Documents in connection with uncompleted Work, plus fair and reasonable sums for overhead and profit on such expenses;

c. all claims, costs, losses and damages (including but not limited to all fees and charges of engineers, attorneys, and other professionals and all court or arbitration or other dispute resolution costs) incurred in settlement of terminated contracts with Subcontractors, Suppliers and others; and

d. reasonable expenses directly attributable to termination.

D. CONTRACTOR MAY STOP WORK OR TERMINATE

15.04.1. If, through no act or fault of the CONTRACTOR, (i) the Work is suspended for more than 90 consecutive days by the OWNER or under an order of court or other public authority, or (ii) the ENGINEER fails to act on any Application for Payment within 30 days after it is submitted, or (iii) the OWNER fails for 30 days to pay the CONTRACTOR any sum finally determined to be due, then the CONTRACTOR may, upon seven days written notice to the OWNER and ENGINEER, and provided the OWNER and ENGINEER do not remedy such suspension or failure within that time, terminate the Contract and recover from the OWNER payment on the same terms as provided in Paragraph 15.03.

15.04.2. In lieu of terminating the Contract and without prejudice to any other right or remedy, if the ENGINEER has failed

to act on an Application for Payment within 30 days after it is submitted, or the OWNER has failed for 30 days to pay the CONTRACTOR any sum finally determined to be due, the CONTRACTOR may, seven days after written notice to the OWNER and ENGINEER, stop the Work until payment is made of all such amounts due the CONTRACTOR, including interest thereon. The provisions of this paragraph 15.04 are not intended to preclude the CONTRACTOR from making claim under Paragraph 10.05 for an adjustment in Contract Price or Contract Times or otherwise for expenses or damage directly attributable to the CONTRACTOR's stopping Work as permitted by this paragraph.

ARTICLE 16 --- DISPUTE RESOLUTION

A. METHODS AND PROCEDURES

16.01.1. Either the OWNER or CONTRACTOR may request mediation of any claim submitted to the ENGINEER for a decision under applicable portions of Article 10 before such decision becomes final and binding. The mediation will be governed

by the Construction Industry Mediation Rules of the American Arbitration Association in effect as of the Effective Date of the Agreement. The request for mediation shall be submitted in writing to the American Arbitration Association and the other party to the Contract. Timely submission of the request shall stay the effect of Paragraph 10.05.5.

16.01.2. The OWNER and CONTRACTOR shall participate in the mediation process in good faith. The process shall be concluded within 60 days of filing of the request. The date of termination of the mediation shall be determined by application of the mediation rules referenced above.

16.01.3. If the Claim is not resolved by mediation, the ENGINEER's action under Paragraph 10.05.3 or a denial pursuant to Paragraph 10.05.3.c or 10.05.4 shall become final and binding 30 days after termination of the mediation, unless, within that time period, the OWNER or CONTRACTOR:

1. elects in writing to invoke any dispute resolution process provided for in the Supplemental General Conditions; or
2. agrees with the other party to submit the Claim to another dispute resolution process; or
3. gives written notice to the other party of their intent to submit the Claim to a court of competent jurisdiction.

ARTICLE 17 --- MISCELLANEOUS

A. GIVING NOTICE:

17.01.1. Whenever any provision of the Contract Documents requires the giving of written notice, it will be deemed to have been validly given if:

1. delivered in person to the individual or to a member of the firm or to an officer of the corporation for whom it is intended; or,

2. delivered at or sent by registered or certified mail, postage prepaid, to the last business address known to the giver of the notice.

B. COMPUTATION OF TIME:

17.02. When any period of time is referred to in the Contract Documents by days, it will be computed to exclude the first and include the last day of such period. If the last of any such period falls on a Saturday or Sunday or on a day made a legal holiday by the law of the applicable jurisdiction, such day will be omitted from the computation.

C. CUMULATIVE REMEDIES

17.03. The duties and obligations imposed by these General Conditions and the rights and remedies available hereunder to the parties hereto are in addition to, and are not to be construed in any way as a limitation of, any rights and remedies available to any or all of them which are otherwise imposed or available by Laws or Regulations, by special warranty or guarantee or by other provisions of the Contract Documents. The provisions of this Paragraph will be as effective as if repeated specifically in the Contract Documents in connection with each particular duty, obligation, right and remedy to which they apply.

D. SURVIVAL OF OBLIGATIONS

17.04. All representatives, indemnifications, warranties, and guarantees made in, required by, or given in accordance with the Contract Documents, as well as all continuing obligations indicated in the Contract Documents, will survive final payment, completion, and acceptance of the Work or termination or completion of the Contract or termination of the services of the CONTRACTOR.

E. CONTROLLING LAW

17.05. This Contract is to be governed by the law of the state in which the Project is located.

F. HEADINGS

17.06. Article and paragraph headings are inserted for convenience only and do not constitute parts of these General Conditions.

END OF GENERAL CONDITIONS

DIVISION 01

GENERAL REQUIREMENTS

TABLE OF CONTENTS

DIVISION 01 - GENERAL REQUIREMENTS

01100 - PROJECT DESCRIPTION
01200 - PRICE AND PAYMENT PROCEDURES
01270 - UNIT PRICES
01300 - ADMINISTRATIVE REQUIREMENTS
01325 - CONSTRUCTION PROGRESS SCHEDULE
01400 - QUALITY REQUIREMENTS
01500 - TEMPORARY FACILITIES AND CONTROLS
01560 - SAFETY STANDARDS AND ACCIDENT PREVENTION
01600 - PRODUCT REQUIREMENTS
01700 - EXECUTION REQUIREMENTS
01780 - CLOSEOUT SUBMITTALS
01785 - PROJECT EVALUATION
SRF Special Conditions

DIVISION 02 - PROJECT CONSTRUCTION

02100 - MEASUREMENT AND PAYMENT
02150 - DEMOLITION
02300 - GENERAL EARTHWORK
02312 - TRENCHING FOR PIPE WORK
02315 - STRUCTURAL EXCAVATION
02316 - FILL AND BACKFILL
02373 - RIPRAP
02510 - WATER DISTRIBUTION SYSTEM
02515 - DISIFECTION OF WATER DISTRIBUTION SYSTEM
02518 - BOOSTER PUMP STATION
02635 - STORM DRAIN SYSTEM
02721 - GRAVEL ROADBASE
02850 - CONCRETE

DIVISION 03 - CONCRETE

03100 - CONCRETE FORMWORK
03200 - REINFORCEMENT STEEL
03290 - JOINTS IN CONCRET
03300 - CAST-IN-PLACE CONCRETE
03350 - BONDED CONCRETE FLOOR OVERLAY
03356 - CONCRETE FLOOR FINISHING

DIVISION 05 - METAL WORK

05200 - MISCELLANEOUS METAL WORK
05510 - METAL STAIRS

DIVISION 06 - CARPENTRY

06100 - ROUGH CARPENTRY

DIVISION 07 - MOISTURE PROTECTION

07410 - METAL ROOF, FASCIA AND SOFFIT PANELS
07616 - XYPEX COATINGS

07620 - SHEET METAL FLASHING AND TRIM
07900 - JOINT SEALERS

DIVISION 08 - DOORS

08110 - STEEL DOORS AND FRAMES
08620 - UNIT SKYLIGHTS
08710 - DOOR HARDWARE

DIVISION 09 – FINISHES

09900 - PAINTS AND COATINGS
09965 - GRAFFITI- RESISTANT COATINGS

DIVISION 10 – SPECIALTIES

10210 - WALL LOUVERS

DIVISION 11 – EQUIPMENT

11200 - PUMPS
11210 - ELECTRIC PUMP MOTORS

DIVISION 15 – MECHANICAL

15000 - MECHANICAL SYSTEMS
15065 - MOTORS FOR MECHANICAL EQUIPMENT
15128 - GAUGES
15130 - SEISMIC CONTROL
15140 - VENTILATING SYSTEM
15145 - PUMP STATION PLUMBING
15810 - DUCTS
15834 - AXIAL FANS

SECTION 01100

PROJECT DESCRIPTION

PART 1 GENERAL

1.01 PROJECT

A. Project Name: PUMPHOUSE #5 and Top of Mountain Water System Project, Located at Powder Mountain Ski Resort, at Powder Mountain, Weber County, Utah.

B. Project Scope: The Project consists of the following items of work with as described below constructed as one project.

1. Mobilization.

2. **Site Work (**Pumphouse #5); and All Appurtenant Work (By Contractor).

   a. General earthwork.
   b. Demolition of portions of existing building as indicated on plans.
   c. Furnishing and install pump water line connections to existing water lines.
   d. Construct Maintenance Access Road as indicated on plans.
   f. Constructing/Installing storm drain system improvements.
   g. Constructing booster pump station and generator building.
   h. Constructing/Installing Pumphouse Boxes/Vaults.
   i. Constructing/Installing other miscellaneous site improvements.

3. **Plumbing System (**Pumphouse #5); and All Appurtenant Work (By Contractor). (By Contractor).

   a. Furnishing and installing plumbing system for booster pump station interior.

4. **Electrical System (**Pumphouse #5); for Booster Pump Station (To be supplied and Installed by Electrical Supplier Contracted Separately By District).

   a. Furnishing and installing electrical system for booster pump station.
   b. Furnishing and installing standby generator, including electrical equipment, mobile generator unit and all required appurtenances.

5. **Pump Station Controls (**Pumphouse #5); for Booster Pump Station (To be supplied and Installed by Controls Supplier Contracted Separately By District).

   a. Furnishing and installing pump station motor controllers, control systems and all required appurtenances.

6. **Booster Pumps (**Pumphouse #5); and all Appurtenant Work (To be supplied and Installed by Pump Supplier Contracted Separately By District).

   a. Furnishing and installing pumps, including electric motors, pumps, discharge heads, and all required appurtenances.

7. **Water Distribution Pipe System (**Top Of Mountain Water System); and All Appurtenant Work (By Contractor).

   a. Trench excavation, backfill and compaction of trench backfill for water lines; and all appurtenant work.
   b. Furnishing, placing and compacting borrow for pipe bedding and trench backfill.
   c. Removing and reinstalling existing utilities (water services, etc.) as required.
   d. Furnish and install fire hydrants as required.

e. Furnishing and installing 10-inch; welded HDPE (DR 17) or PVC C900 pipe and fittings.
f. Furnishing and installing 10-inch and 4-inch ductile iron pipe and fittings, with poly-wrap.
g. Furnishing and installing 2-inch, 1-inch, and ¾-inch HDPE water service (lateral) pipe and fittings.
h. Furnishing and installing water meters.
i. Furnishing and installing butterfly valves, with cast iron valve boxes.
j. Furnishing and installing Pressure Reducing Valve (PRV) station stations, with concrete vault, air-vacuum relief valve, pipe, fittings and valves, and electrical equipment for lighting and heating.
k. Furnishing and installing Air-vacuum Relief Valve (ARV), pipe, fittings and valves, and electrical equipment for lighting and heating.
l. Connecting existing pipes to new water line; including pipe, fittings, couplings, and all appurtenant work.
m. Restoring gravel surfaces along pipe trenches for parking area and un-paved roadways.
n. Restore disturbed landscaped areas with native seed mix.
o. Furnishing and placing concrete for thrust blocks.

C. Owner's Name: Powder Mountain Water and Sewer Improvement District (PMWSID)

1. District Engineer: Brad Gilson, P.E.

D. Design Engineer 's Name: Gilson Engineering, Inc., Consultant Engineers and Surveyors.

E. The Project shall be constructed according to these project specifications and drawings; and according to the Standard Technical Specifications and Drawings for PMWSID, and Addendum, Latest Edition.

1. Work on this project shall be done as specified in these project specifications and as indicated on the project drawings.

2. All work not covered by these specifications shall be done as specified in the Standard Specification and as indicated on the Standard Drawings.

3. Copies of the Standard Technical Specifications may be obtained from the office of the Design Engineer for a non-refundable payment of $40.00 for each set; checks made payable to Gilson Engineering.

1.02 CONTRACT DESCRIPTION

A. Contract Type: A single prime contract for each task described in the project scope based on a stipulated price as described in Document 00500 - Agreement.

1.03 PROJECT DRAWINGS

A. The PROJECT drawings shall form a part of this contract as forth in the Agreement.

PART 2 PRODUCTS - NOT USED

PART 3 EXECUTION - NOT USED

END OF SECTION

SECTION 01200

PRICE AND PAYMENT PROCEDURES

PART 1 GENERAL

1.01 SECTION INCLUDES

A. Procedures for preparation and submittal of applications for progress payments.

B. Documentation of changes in Contract Price and Contract Time.

C. Change procedures.

D. Correlation of Contractor submittals based on changes.

E. Procedures for preparation and submittal of application for final payment.

1.02 RELATED SECTIONS

A. Document 00500 - Agreement: Contract Price, retainages, payment period, monetary values of unit prices.

B. Document 00700 - General Conditions and Document 00800 - Supplemental General Conditions: Additional requirements for progress payments, final payment, changes in the Work.

C. Document 00800 - Supplemental General Conditions: Percentage allowances for Contractor's overhead and profit.

1.03 APPLICATIONS FOR PROGRESS PAYMENTS

A. Payment Period: Submit at intervals stipulated in Section 19 of the General Conditions.

B. Present required information in typewritten form.

C. Form: Contract Form including continuation sheets when required.

D. For each item, provide a column for listing each of the following:

1. Item Number.
2. Description of work.
3. Scheduled Values.
4. Previous Applications.
5. Work in Place under this Application.
6. Authorized Change Orders.
7. Total Completed to Date of Application.
8. Percentage of Completion.
9. Balance to Finish.
10. Retainage.

E. Execute certification by signature of authorized officer.

F. List each authorized Change Order as a separate line item, listing Change Order number and dollar amount as for an original item of Work.

G. Submit three copies of each Application for Payment.

H. Include the following with the application:

1. Transmittal letter as specified for Submittals in Section 01300.

2. Construction progress schedule, revised and current as specified in Section 01300.

3. Project record documents as specified in Section 01780, for review by the Owner which will be returned to the Contractor.

I. When Engineer or District Inspector requires substantiating information, submit data justifying dollar amounts in question. Provide one copy of data with cover letter for each copy of submittal. Show application number and date, and line item by number and description.

1.04 MODIFICATION PROCEDURES

A. Submit name of the individual authorized to receive change documents and who will be responsible for informing others in Contractor's employ or Subcontractors of changes to the Work.

B. The Engineer or District Inspector will advise of minor changes in the Work not involving an adjustment to Contract Price or Contract Time as authorized by the Conditions of the Contract by issuing supplemental instructions in writing.

C. Construction Change Directive: Engineer may issue a document, signed by the Owner, instructing the Contractor to proceed with a change in the Work, for subsequent inclusion in a Change Order.

1. The document will describe changes in the Work, and will designate method of determining any change in Contract Price or Contract Time.

2. Promptly execute the change in Work.

D. Proposal Request: The Engineer may issue a document which includes a detailed description of a proposed change with supplementary or revised Drawings and specifications, a change in Contract Time for executing the change and the period of time during which the requested price will be considered valid. Contractor shall prepare and submit a fixed price quotation within seven days.

E. The Contractor may propose a change by submitting a request for change to the Engineer, describing the proposed change and its full effect on the Work, with a statement describing the reason for the change, and the effect on the Contract Price and Contract Time with full documentation and a statement describing the effect on Work by separate or other contractors. Document any requested substitutions in accordance with Section 01600.

F. Computation of Change in Contract Amount:

1. For change requested by Engineer for work falling under a fixed price contract, the amount will be based on Contractor's price quotation.

2. For change requested by Contractor, the amount will be based on the Contractor's request for a Change Order as approved by Engineer.

3. For pre-determined unit prices and quantities, the amount will be based on the fixed unit prices.

4. For change ordered by Engineer without a quotation from the Contractor, the amount will be determined by the Engineer based on the Contractor's substantiation of costs as specified for Time and Material work.

G. Substantiation of Costs: Provide full information required for evaluation.

1. On request, provide following data:
   a. Quantities of products, labor, and equipment.
   b. Taxes, insurance, and bonds.
   c. Overhead and profit.
   d. Justification for any change in Contract Time.
   e. Credit for deletions from Contract, similarly documented.

2. Support each claim for additional costs with additional information:
   a. Origin and date of claim.
   b. Dates and times work was performed, and by whom.
   c. Time records and wage rates paid.
   d. Invoices and receipts for products, equipment, and subcontracts, similarly documented.

3. For Time and Material work, submit itemized account and supporting data after completion of change, within time limits indicated in the Conditions of the Contract.

H. Execution of Change Orders: Engineer will issue Change Orders for signatures of parties as provided in the Conditions of the Contract-on-Contract Change Order Form.

I. After execution of Change Order, promptly revise Schedule of Values and Application for Payment forms to record each authorized Change Order as a separate line item and adjust the Contract Sum.

J. Promptly revise progress schedules to reflect any change in Contract Time, revise sub-schedules to adjust times for other items of work affected by the change, and resubmit.

K. Promptly enter changes in Project Record Documents.

1.05 APPLICATION FOR FINAL PAYMENT

A. Prepare Application for Final Payment as specified for progress payments, identifying total adjusted Contract Price, previous payments, and sum remaining due.

B. Application for Final Payment will not be considered until the following have been accomplished:

1. All closeout procedures specified in Section 01700.

PART 2 PRODUCTS - NOT USED

PART 3 EXECUTION - NOT USED

END OF SECTION

SECTION 01270

UNIT PRICES

PART 1 GENERAL

1.01 SECTION INCLUDES

A. Measurement and payment criteria applicable to Work performed under a unit price or lump sum price payment method.

B. Defect assessment and non-payment for rejected work.

1.02 COSTS INCLUDED

A. Unit Prices or Lump Sum Prices included on the Bid Form shall include full compensation for all required labor, Products, tools, equipment, plant, transportation, services and incidentals; erection, application or installation of an item of the Work; overhead and profit.

1.03 UNIT QUANTITIES SPECIFIED

A. Quantities indicated in the Bid Form are for bidding and contract purposes only. Quantities and measurements of actual Work will determine the payment amount.

B. Quantities indicated in the Bid Form will be the maximum amount of these items to be used, without prior approval, in writing, by the Engineer. Over-runs of these items will not be paid for if prior approval was not received by the Contractor; and will be at the Contractor own expense, with no additional cost to the Owner.

1.04 MEASUREMENT OF QUANTITIES

A. Measurement methods delineated in the individual specification sections complement the criteria of this section. In the event of conflict, the requirements of the individual specification section govern.

B. Take all measurements and compute quantities. Measurements and quantities will be verified by the District Inspector or Engineer.

C. Assist by providing necessary equipment, workers, and survey personnel as required.

D. Measurement Devices:

1. Weigh Scales: Inspected, tested and certified by the applicable state Weights and Measures department within the past year.

2. Platform Scales: Of sufficient size and capacity to accommodate the conveying vehicle.

3. Metering Devices: Inspected, tested and certified by the applicable State department within the past year.

E. Measurement by Weight:

1. Concrete reinforcing steel, rolled or formed steel or other metal shapes will be measured by handbook weights. Welded assemblies will be measured by handbook or scale weight.

2. Soil material will be measured by scale weight. Weights will be converted to volume measurements by use of soil density.

F. Measurement by Volume: Measured by cubic dimension using mean length, width and height or thickness.

G. Measurement by Area: Measured by square dimension using mean length and width or radius.

H. Linear Measurement: Measured by linear dimension, at the item centerline or mean chord.

I. Stipulated Sum/Price Measurement: Items measured by weight, volume, area, or linear means or combination, as appropriate, as a completed item or unit of the Work.

J. Perform surveys required to determine quantities, including control surveys to establish measurement reference lines. Notify the District Inspector or Engineer prior to starting work.

K. Contractor 's Engineer Responsibilities: Sign surveyor's field notes or keep duplicate field notes, calculate and certify quantities for payment purposes.

1.05 PAYMENT

A. Payment for Work governed by unit prices will be made on the basis of the actual measurements and quantities of Work which is incorporated in or made necessary by the Work and accepted by the District Inspector or Engineer, multiplied by the unit sum/price.

B. Payment will not be made for any of the following:

1. Products wasted or disposed of in a manner that is not acceptable.

2. Products determined as unacceptable before or after placement.

3. Products not completely unloaded from the transporting vehicle.

4. Products placed beyond the lines and levels of the required Work.

5. Products remaining on hand after completion of the Work.

6. Loading, hauling, and disposing of rejected Products.

1.06 DEFECT ASSESSMENT

A. Replace Work, or portions of the Work, not conforming to specified requirements.

B. If, in the opinion of the District Inspector or Engineer it is not practical to remove and replace the Work, the District Inspector or Engineer, will direct one of the following remedies:

1. The defective Work may remain, but the unit sum/price will be adjusted to a new sum/price at the discretion of the Engineer.

2. The defective Work will be partially repaired to the instructions of the Engineer, and the unit sum/price will be adjusted to a new sum/price at the discretion of the Engineer.

C. If, in the opinion of the Owner, it is not practical to remove and replace the Work, the Owner will direct one of the following remedies:

1. The defective Work may remain, but the unit sum/price will be adjusted to a new sum/price at the discretion of the Owner.

2. The defective Work will be partially repaired to the instructions of the Owner, and the unit sum/price will be adjusted to a new sum/price at the discretion of the Owner.

D. The individual specification sections may modify these options or may identify a specific formula or percentage sum/price reduction.

E. The authority of the Engineer to assess the defect and identify payment adjustment is final.

PART 2 PRODUCTS - NOT USED

PART 3 EXECUTION - NOT USED

END OF SECTION

SECTION 01300

ADMINISTRATIVE REQUIREMENTS

PART 1 GENERAL

1.01 SECTION INCLUDES

A. Preconstruction meeting.

B. Progress meetings.

C. Construction progress schedule.

D. Progress videotapes and photographs.

E. Coordination drawings.

F. Submittals for review, information, and project closeout.

G. Number of copies of submittals.

H. Submittal procedures.

1.02 RELATED SECTIONS - NOT USED

1.03 PROJECT COORDINATION

A. Project Coordinator: District Engineer.

B. Cooperate with the Project Coordinator in allocation of mobilization areas of site; for field offices and sheds, for project access, traffic, and parking facilities.

C. During construction, coordinate use of site and facilities through the Project Coordinator.

D. Comply with Project Coordinator's procedures for intra-project communications; submittals, reports and records, schedules, coordination drawings, and recommendations; and resolution of ambiguities and conflicts.

E. Comply with instructions of the Project Coordinator for use of temporary utilities and construction facilities.

F. Coordinate field engineering and layout work under instructions of the Project Coordinator.

G. Make the following types of submittals to the Engineer through the Project Coordinator:

1. Requests for interpretation.

2. Requests for substitution.

3. Shop drawings, product data, and samples.

4. Test and inspection reports.

5. Design data.

6. Manufacturer's instructions and field reports.

7. Applications for payment and change order requests.

8. Progress schedules.

9. Coordination drawings.

10. Closeout submittals.

PART 2 PRODUCTS - NOT USED

PART 3 EXECUTION

3.01 PRECONSTRUCTION MEETING

A. Owner will schedule a meeting after Notice of Award.

B. Attendance Required:

1. Owner.

2. District Engineer.

3. Engineer.

4. Contractor.

C. Prior to Meeting:

1. Execution of Owner -Contractor Agreement.

2. Submission of executed bonds and insurance certificates.

D. Agenda:

1. Distribution of Contract Documents.

2. Submission of list of Subcontractors, and progress schedule.

3. Designation of personnel representing the parties in Contract, Contractor, Owner, and the Engineer.

4. Procedures and processing of field decisions, submittals, substitutions, applications for payments, proposal request, Change Orders, and Contract closeout procedures.

5. Review safety standards and procedures.

6. Scheduling.

7. Scheduling activities of a testing company and Geotechnical Engineer, if required.

E. Record minutes and distribute copies within two days after meeting to participants, with one copy to Contractor, Engineer, Owner, participants, and those affected by decisions made.

3.02 PROGRESS MEETINGS

A. Schedule and administer meetings throughout progress of the Work at maximum monthly intervals.

B. Make arrangements for meetings, prepare agenda with copies for participants, preside at meetings.

C. Attendance Required: Job superintendent, major Subcontractors and suppliers, Owner, District Engineer, Engineer, as appropriate to agenda topics for each meeting.

D. Agenda:

1. Review minutes of previous meetings.
2. Review of Work progress.
3. Field observations, problems, and decisions.
4. Identification of problems which impede planned progress.
5. Review of submittals schedule and status of submittals.
6. Review of off-site fabrication and delivery schedules.
7. Maintenance of progress schedule.
8. Corrective measures to regain projected schedules.
9. Planned progress during succeeding work period.
10. Coordination of projected progress.
11. Maintenance of quality and work standards.
12. Effect of proposed changes on progress schedule and coordination.
13. Other business relating to Work.

E. Record minutes and distribute copies within two days after meeting to participants, with one copy to Contractor, Engineer, Owner, participants, and those affected by decisions made.

3.03 CONSTRUCTION PROGRESS SCHEDULE - NOT USED

3.04 PROGRESS VIDEOTAPES AND PHOTOGRAPHS - NOT USED

3.05 COORDINATION DRAWINGS

A. Provide information required by Project Coordinator for preparation of coordination drawings.

B. Review drawings prior to submission to Engineer.

3.06 SUBMITTALS FOR REVIEW

A. When the following are specified in individual sections, submit them for review:

1. Product data.
2. Shop drawings.
3. Samples for selection.
4. Samples for verification.

B. Submit to Engineer for review for the limited purpose of checking for conformance with information given and the design concept expressed in the contract documents.

C. Samples will be reviewed only for aesthetic, color, or finish selection.

D. After review, provide copies and distribute in accordance with SUBMITTAL PROCEDURES article below and for record documents purposes described in Section 01780 - CLOSEOUT SUBMITTALS.

3.07 SUBMITTALS FOR INFORMATION

A. When the following are specified in individual sections, submit them for information:

1. Design data.

2. Certificates.

3. Test reports.

4. Inspection reports.

5. Manufacturer's instructions.

6. Manufacturer's field reports.

7. Other types indicated.

B. Submit for the Engineer's knowledge as contract administrator or for the Owner. No action will be taken.

3.08 SUBMITTALS FOR PROJECT CLOSEOUT

A. When the following are specified in individual sections, submit them at project closeout:

1. Project record documents.

2. Operation and maintenance data.

3. Warranties.

4. Bonds.

5. Other types as indicated.

B. Submit for the Owner 's benefit during and after project completion.

3.09 NUMBER OF COPIES OF SUBMITTALS

A. Documents for Review:

1. Small size sheets, not larger than 8-1/2 x 11 inches: Submit the number of copies which the Contractor requires, plus two copies which will be retained by the Engineer.

2. Larger sheets, not larger than 36 x 48 inches: Submit the number of opaque reproductions which Contractor requires, plus two copies which will be retained by Engineer.

B. Documents for Information: Submit two copies.

C. Documents for Project Closeout: Make one reproduction of submittal originally reviewed. Submit one extra of submittals for information.

D. Samples: Submit the number specified in individual specification sections; one of which will be retained by Engineer.

1. After review, produce duplicates.

2. Retained samples will not be returned to Contractor unless specifically so stated.

3.10 SUBMITTAL PROCEDURES

A. Transmit each submittal with transmittal letter.

B. Sequentially number the transmittal letters. Revise submittals with original number and a sequential alphabetic suffix.

C. Identify Project, Contractor, Subcontractor or supplier; pertinent drawing and detail number, and specification section number, as appropriate on each copy.

D. Apply Contractor 's stamp, signed or initialed certifying that review, approval, verification of Products required, field dimensions, adjacent construction Work, and coordination of information is in accordance with the requirements of the Work and Contract Documents.

E. Deliver submittals to Engineer at business address.

F. Schedule submittals to expedite the Project, and coordinate submission of related items.

G. For each submittal for review, allow 7 days excluding delivery time to and from the Contractor.

H. Identify variations from Contract Documents and Product or system limitations which may be detrimental to successful performance of the completed Work.

I. Provide space for Contractor and Engineer review stamps.

J. When revised for re-submission, identify all changes made since previous submission.

K. Distribute copies of reviewed submittals as appropriate. Instruct parties to promptly report any inability to comply with requirements.

L. Submittals not requested will not be recognized or processed.

END OF SECTION

SECTION 01325

CONSTRUCTION PROGRESS SCHEDULE

PART 1 GENERAL

1.01 SECTION INCLUDES

A. Preliminary schedule.

B. Construction progress schedule, bar chart type.

1.02 REFERENCES

A. AGC (CPM) - The Use of CPM in Construction - A Manual for General Contractors and the Construction Industry; Associated General Contractors of America; latest edition.

B. M-H (CPM) - CPM in Construction Management - Project Management with CPM, O'Brien, McGraw-Hill Book Company; latest edition.

1.03 SUBMITTALS

A. Within 10 days after date of Agreement, submit preliminary schedule defining planned operations for the first 60 days of Work, with a general outline for remainder of Work.

B. If preliminary schedule requires revision after review, submit revised schedule within 10 days, as directed by the District Inspector or Engineer.

C. Within 20 days after review of preliminary schedule, submit draft of proposed complete schedule for review.

1. Include written certification that major contractors have reviewed and accepted proposed schedule.

D. Within 10 days after joint review, submit complete schedule.

E. Submit updated schedule with each Application for Payment, as directed by the Inspector or Engineer.

F. Submit the number of opaque reproductions the Contractor requires, plus one copy which will be retained by Engineer.

G. Submit under transmittal letter form specified in Section 01300.

1.04 QUALITY ASSURANCE

A. Scheduler: Contractor 's personnel or specialist Consultant specializing in CPM scheduling with one years minimum experience in scheduling construction work of a complexity comparable to this Project, and having use of computer facilities capable of delivering a detailed graphic printout within 48 hours of request.

1.05 SCHEDULE FORMAT

A. Listings: In chronological order according to the start date for each activity. Identify each activity with the applicable specification section number.

B. Diagram Sheet Size: Maximum 22 x 17 inches or width required.

C. Sheet Size: Multiples of 8-1/2 x 11 inches.

D. Scale and Spacing: To allow for notations and revisions.

PART 2 PRODUCTS - NOT USED

PART 3 EXECUTION

3.01 PRELIMINARY SCHEDULE

A. Prepare preliminary schedule in the form of a horizontal bar chart.

3.02 CONTENT

A. Show complete sequence of construction by activity, with dates for beginning and completion of each element of construction.

B. Identify each item by specification section number.

C. Identify work of separate stages and other logically grouped activities.

D. Provide sub-schedules for each stage of Work identified in Section 01100.

E. Provide sub-schedules to define critical portions of the entire schedule.

F. Include conferences and meetings in schedule.

G. Show accumulated percentage of completion of each item, and total percentage of Work completed, as of the first day of each month.

H. Provide separate schedule of submittal dates for shop drawings, product data, and samples, owner-furnished products, Products identified under Allowances, and dates reviewed submittals will be required from Engineer. Indicate decision dates for selection of finishes.

I. Indicate delivery dates for owner-furnished products.

J. Coordinate content with schedule of values specified in Section 01200.

K. Provide legend for symbols and abbreviations used.

3.03 BAR CHARTS

A. Include a separate bar for each major portion of Work or operation.

B. Identify the first work day of each week.

3.04 REVIEW AND EVALUATION OF SCHEDULE

A. Participate in joint review and evaluation of schedule with Inspector or Engineer at each submittal.

B. Evaluate project status to determine work behind schedule and work ahead of schedule.

C. After review, revise as necessary as result of review, and resubmit within 10 days.

3.05 UPDATING SCHEDULE

A. Maintain schedules to record actual start and finish dates of completed activities.

B. Indicate progress of each activity to date of revision, with projected completion date of each activity.

C. Annotate diagrams to graphically depict current status of Work.

D. Identify activities modified since previous submittal, major changes in Work, and other identifiable changes.

E. Indicate changes required to maintain Date of Substantial Completion.

F. Submit reports required to support recommended changes.

G. Provide narrative report, as directed by the Inspector or Engineer, to define problem areas, anticipated delays, and impact on the schedule. Report corrective action taken or proposed and its effect including the effects of changes on schedules of separate contractors.

3.06 DISTRIBUTION OF SCHEDULE

A. Distribute copies of updated schedules to Contractor 's project site file, to Subcontractors, suppliers, Engineer, Owner, and other concerned parties.

B. Instruct recipients to promptly report, in writing, problems anticipated by projections shown in schedules.

END OF SECTION

SECTION 01400

QUALITY REQUIREMENTS

PART 1 GENERAL

1.01 SECTION INCLUDES

A. References and standards.

B. Quality assurance submittals.

C. Control of installation.

D. Tolerances.

E. Testing and inspection services.

F. Manufacturers' field services.

1.02 RELATED SECTIONS

A. Document 00300 - Information Available to Bidders: Soil investigation data.

B. Document 00700 - General Conditions: Inspections and approvals required by public authorities.

C. Section 01300 - Administrative Requirements: Submittal procedures.

D. Section 01600 - Product Requirements: Requirements for material and product quality.

1.03 REFERENCES

A. ASTM C 1077 - Standard Practice for Laboratories Testing Concrete and Concrete Aggregates for Use in Construction and Criteria for Laboratory Evaluation.

B. ASTM D 290 - Standard Practice for Bituminous Mixing Plant Inspection.

C. ASTM D 3740 - Standard Practice for Minimum Requirements for Agencies Engaged in the Testing and/or Inspection of Soil and Rock as Used in Engineering Design and Construction.

D. ASTM E 329 - Standard Specification for Agencies Engaged in the Testing and/or Inspection of Materials Used in Construction.

E. ASTM E 543 - Standard Practice for Agencies Performing Nondestructive Testing.

F. ASTM E 548 - Standard Guide for General Criteria used for Evaluating Laboratory Competence.

G. Use the latest edition of the above reference standards as of the date of the project.

1.04 SUBMITTALS

A. Testing Agency Qualifications:

1. Prior to start of Work, submit agency name, address, and telephone number, and names of full time registered Engineer and responsible officer.

2. Submit copy of report of laboratory facilities inspection made by Materials Reference Laboratory of National Bureau of Standards during most recent inspection, with memorandum of remedies of any deficiencies reported by the inspection.

B. Test Reports: After each test/inspection, promptly submit two copies of report to District Inspector or Engineer and to Contractor; within maximum of 24 hours.

1. Include:
   a. Date issued.
   b. Project title and number.
   c. Name of inspector.
   d. Date and time of sampling or inspection.
   e. Identification of product and specifications section.
   f. Location in the Project.
   g. Type of test/inspection.
   h. Date of test/inspection.
   i. Results of test/inspection.
   j. Conformance with Contract Documents.
   k. When requested by District Inspector or Engineer, provide interpretation of results.

2. Test reports are submitted for the Inspector or Engineer 's knowledge as contract administrator or for the Owner, for information for the limited purpose of assessing conformance with information given and the design concept expressed in the contract documents.

C. Certificates: When specified in individual specification sections, submit certification by the manufacturer and Contractor to Inspector or Engineer, in quantities specified for Product Data.

1. Indicate material or Product conforms to or exceeds specified requirements. Submit supporting reference data, affidavits, and certifications as appropriate.

2. Certificates may be recent or previous test results on material or Product, but must be acceptable to Inspector or Engineer.

D. Manufacturer's Instructions: When specified in individual specification sections, submit printed instructions for delivery, storage, assembly, installation, start-up, adjusting, and finishing, for the Owner 's information. Indicate special procedures, perimeter conditions requiring special attention, and special environmental criteria required for application or installation.

E. Manufacturer's Field Reports: Submit reports for the Inspector or Engineer 's benefit as contract administrator or for the Owner.

1. Submit for information for the limited purpose of assessing conformance with information given and the design concept expressed in the contract documents.

F. Erection Drawings: Submit drawings for the Inspector or Engineer 's benefit as contract administrator or for the Owner.

1. Submit for information for the limited purpose of assessing conformance with information given and the design concept expressed in the contract documents.

2. Data indicating inappropriate or unacceptable Work may be subject to action by the Inspector, Engineer or Owner.

1.05 REFERENCES AND STANDARDS

A. For products and workmanship specified by reference to a document or documents not included in the Project Manual, also referred to as reference standards, comply with requirements of the standard, except when more rigid requirements are specified or are required by applicable codes.

B. Conform to reference standard of date of issue current on date of Contract Documents, except where a specific date is established by applicable code.

C. Obtain copies of standards where required by product specification sections.

D. Maintain copy at project site during submittals, planning, and progress of the specific work, until Substantial Completion.

E. Should specified reference standards conflict with Contract Documents, request clarification from the Engineer before proceeding.

F. Neither the contractual relationships, duties, or responsibilities of the parties in Contract nor those of the Inspector or Engineer shall be altered from the Contract Documents by mention or inference otherwise in any reference document.

1.06 TESTING AND INSPECTION AGENCIES

A. Owner will employ and pay for services of an independent testing agency to perform specified testing. See Supplemental General Conditions for specified testing.

B. Contractor shall employ and pay for services of an independent testing agency to perform other specified testing. See Supplemental General Conditions for specified testing.

C. Employment of agency in no way relieves Contractor of obligation to perform Work in accordance with requirements of Contract Documents.

D. Contractor and Owner Employed Agency:

1. Testing agency: Comply with requirements of ASTM E 329, ASTM E 548, ASTM C 1093, ASTM E 543, ASTM C 1021, ASTM C 1077, ASTM C 1093, and ASTM C 1021.

2. Inspection agency: Comply with requirements of ASTM D290.

3. Laboratory: Authorized to operate in State in which Project is located.

4. Laboratory Staff: Maintain a full-time registered Engineer on staff to review services.

5. Testing Equipment: Calibrated at reasonable intervals with devices of an accuracy traceable to either National Bureau of Standards or accepted values of natural physical constants.

PART 2 PRODUCTS - NOT USED

PART 3 EXECUTION

3.01 CONTROL OF INSTALLATION

A. Monitor quality control over suppliers, manufacturers, Products, services, site conditions, and workmanship, to produce Work of specified quality.

B. Comply with manufacturers' instructions, including each step-in sequence.

C. Should manufacturers' instructions conflict with Contract Documents, request clarification from Engineer before proceeding.

D. Comply with specified standards as minimum quality for the Work except where more stringent tolerances, codes, or specified requirements indicate higher standards or more precise workmanship.

E. Have Work performed by persons qualified to produce required and specified quality.

F. Verify that field measurements are as indicated on shop drawings or as instructed by the manufacturer.

G. Secure products in place with positive anchorage devices designed and sized to withstand stresses,

vibration, physical distortion, and disfigurement.

3.02 TOLERANCES

A. Monitor fabrication and installation tolerance control of Products to produce acceptable Work. Do not permit tolerances to accumulate.

B. Comply with manufacturers' tolerances. Should manufacturers' tolerances conflict with Contract Documents, request clarification from Engineer before proceeding.

C. Adjust Products to appropriate dimensions; position before securing Products in place.

3.03 TESTING AND INSPECTION

A. See individual specification sections for testing required.

B. Testing Agency Duties:

1. Provide qualified personnel at site. Cooperate with Engineer and Contractor in performance of services.

2. Perform specified sampling and testing of Products in accordance with specified standards.

3. Ascertain compliance of materials and mixes with requirements of Contract Documents.

4. Promptly notify Inspector or Engineer and Contractor of observed irregularities or non conformance of Work or Products.

5. Perform additional tests and inspections required by Inspector or Engineer.

6. Attend preconstruction meetings and progress meetings, when requested.

7. Submit reports of all tests/inspections specified.

C. Limits on Testing/Inspection Agency Authority:

1. Agency may not release, revoke, alter, or enlarge on requirements of Contract Documents.

2. Agency may not approve or accept any portion of the Work.

3. Agency may not assume any duties of Contractor.

4. Agency has no authority to stop the Work.

D. Contractor Responsibilities:

1. Deliver to agency at designated location, adequate samples of materials proposed to be used which require testing, along with proposed mix designs.

2. Cooperate with laboratory personnel, and provide access to the Work.

3. Provide incidental labor and facilities:
   a. To provide access to Work to be tested/inspected.
   b. To obtain and handle samples at the site or at source of Products to be tested/inspected.
   c. To facilitate tests/inspections.
   d. To provide storage and curing of test samples.

4. Notify Inspector or Engineer and laboratory 24 hours prior to expected time for operations requiring testing/inspection services.

5. Employ services of an independent qualified testing laboratory and pay for additional samples, tests, and inspections required by Contractor beyond specified requirements.

6. Arrange with Owner 's agency and pay for additional samples, tests, and inspections required by Contractor beyond specified requirements.

E. Re-testing required because of non-conformance to specified requirements shall be performed by the same agency on instructions by the Inspector or Engineer. Payment for re-testing will be charged to the Contractor by deducting testing charges from the Contract Sum/Price.

3.04 MANUFACTURERS' FIELD SERVICES

A. When specified in individual specification sections, require material or Product suppliers or manufacturers to provide qualified staff personnel to observe site conditions, conditions of surfaces and installation, quality of workmanship, start-up of equipment, test, adjust and balance of equipment as applicable, and to initiate instructions when necessary.

B. Report observations and site decisions or instructions given to applicators or installers that are supplemental or contrary to manufacturers' written instructions.

3.05 DEFECT ASSESSMENT

A. Replace Work or portions of the Work not conforming to specified requirements.

B. If, in the opinion of the District Inspector or Engineer, it is not practical to remove and replace the Work, the District Inspector or Engineer will direct an appropriate remedy or adjust payment.

END OF SECTION

SECTION 01500

TEMPORARY FACILITIES AND CONTROLS

PART 1 GENERAL

1.01 SECTION INCLUDES

A. Temporary sanitary facilities.

B. Temporary Controls: Barriers, enclosures, and fencing.

C. Vehicular access and parking.

1.02 TEMPORARY SANITARY FACILITIES

A. Provide and maintain required chemical or marine type toilets of acceptable type. Provide at time of project mobilization.

B. Use of existing facilities is permitted, where acceptable to the owners of the facilities.

C. Maintain daily in clean and sanitary condition.

D. At end of construction, remove portable toilets completely.

1.03 BARRIERS

A. Provide sufficient barriers at all unsafe places at or near construction areas and to protect existing facilities and adjacent properties from damage from construction operations; in all cases maintain safe passageways through construction areas.

B. Provide protection for plants designated to remain. Replace damaged plants.

C. Protect non-owned vehicular traffic, stored materials, and structures from damage.

1.04 FENCING

A. Where required, provide temporary fences at construction areas to contain domestic animals.

B. After project work is completed, the temporary fences shall be totally removed.

1.05 VEHICULAR ACCESS AND PARKING

A. Coordinate access and haul routes with governing authorities and Owner.

B. Provide and maintain access to fire hydrants, free of obstructions.

C. Maintain at least one lane of traffic for local residences.

D. Provide and maintain access to adjacent businesses as directed.

E. Provide means of removing mud from vehicle wheels before entering streets.

F. Provide temporary parking areas to accommodate construction personnel.

1.06 REMOVAL OF UTILITIES, FACILITIES, AND CONTROLS

A. Remove temporary equipment, facilities, materials, prior to Substantial Completion inspection.

B. Remove underground installations to a minimum depth of 2 feet. Grade site as indicated.

C. Clean and repair damage caused by installation or use of temporary work.

D. Restore existing facilities used during construction to original condition. Restore permanent facilities used during construction to specified condition.

PART 2 PRODUCTS - NOT USED

PART 3 EXECUTION - NOT USED

END OF SECTION

SECTION 01560

SAFETY STANDARDS AND ACCIDENT PREVENTION

PART 1 GENERAL

1.01 SECTION INCLUDES

A. Safety Standards.

B. Accident Prevention.

1.02 DEFINITIONS

A. OSHA - Occupational Safety and Health Administration.

B. UOSHA - Utah Occupational Safety and Health Administration.

1.03 SUBMITTALS

A. See Section 01300 - Administrative Requirements, for submittal procedures.

B. Provide copy of OSHA 200 for past two years.

C. Provide copy of citation history from OSHA for past two years.

D. Provide copy of safety and health program.

1.04 SAFETY STANDARDS AND ACCIDENT PREVENTION

A. Health and safety, as well as environmental concerns, are given top priority by the Owner.

B. With respect to all work performed for this Contract, the Contractor shall:

1. Provide a safe and healthful work place in accordance with all federal, state and local regulations.

2. Conform to all rules and regulation of OSHA.

3. Immediately notify the OWNER of ANY accident or job-related illness that occurs on the job site.

4. Notify UOSHA of any serious accident within 12 hours of such occurrence, as required by the Utah Administrative Code R574-102 13.1.1.

5. Notify the OWNER of any sub-contractor retained to work on this project; and assure that they are informed of the Safety and Health Standards required by this Contract.

6. Provide the OWNER with a traffic plan for the work zone and buffer zone. Plan must be approved by U.D.O.T. where necessary.

PART 2 PRODUCTS - NOT USED

PART 3 EXECUTION - NOT USED

END OF SECTION

SECTION 01600

PRODUCT REQUIREMENTS

PART 1 GENERAL

1.01 SECTION INCLUDES

A. General product requirements.

B. Transportation, handling, storage and protection.

C. Product option requirements.

D. Substitution limitations and procedures.

1.02 RELATED SECTIONS

A. Document 00200 - Instructions to Bidders: Product options and substitution procedures prior to bid date.

B. Section 01400 - Quality Requirements: Product quality monitoring.

1.03 SUBMITTALS

A. Proposed Products List: Submit list of major products proposed for use, with name of manufacturer, trade name, and model number of each product.

1. Submit within 15 days after date of Agreement.

2. For products specified only by reference standards, list applicable reference standards.

B. Product Data Submittals: Submit manufacturer's standard published data. Mark each copy to identify applicable products, models, options, and other data. Supplement manufacturers' standard data to provide information specific to this Project.

C. Shop Drawing Submittals: Prepared specifically for this Project.

D. Provide written statement that materials and equipment being furnished are suitable and proper for the intended installations; that suppliers have investigated intended uses; and that items will satisfactorily perform and operate in the installations.

PART 2 PRODUCTS

2.01 PRODUCTS

A. Do not use materials and equipment removed from existing premises, except as specifically permitted by the Contract Documents.

B. Provide interchangeable components of the same manufacture for components being replaced.

2.02 PRODUCT OPTIONS

A. Products Specified by Reference Standards or by Description Only: Use any product meeting those standards or description.

B. Products Specified by Naming One or More Manufacturers: Use a product of one of the manufacturers named and meeting specifications, no options or substitutions allowed.

C. Products Specified by Naming One or More Manufacturers with a Provision for Substitutions: Submit a request for substitution for any manufacturer not named.

PART 3 EXECUTION

3.01 SUBSTITUTION PROCEDURES

A. Instructions to Bidders specify time restrictions for submitting requests for substitutions during the bidding period. Comply with requirements specified in this section.

B. Engineer will consider requests for substitutions only within 15 days after date of Agreement.

C. Substitutions may be considered when a product becomes unavailable through no fault of the Contractor.

D. Document each request with complete data substantiating compliance of proposed substitution with Contract Documents.

E. A request for substitution constitutes a representation that the submitter:

1. Has investigated proposed product and determined that it meets or exceeds the quality level of the specified product.

2. Will provide the same warranty for the substitution as for the specified product.

3. Will coordinate installation and make changes to other Work which may be required for the Work to be complete with no additional cost to Owner.

4. Waives claims for additional costs or time extension which may subsequently become apparent.

5. Will reimburse Owner and Engineer for review or redesign services associated with re-approval by authorities.

F. Substitutions will not be considered when they are indicated or implied on shop drawing or product data submittals, without separate written request, or when acceptance will require revision to the Contract Documents.

G. Substitution Submittal Procedure:

1. Submit three copies of request for substitution for consideration. Limit each request to one proposed substitution.

2. Submit shop drawings, product data, and certified test results attesting to the proposed product equivalence. Burden of proof is on proposer.

3. The Engineer will notify Contractor in writing of decision to accept or reject request.

3.02 TRANSPORTATION AND HANDLING

A. Transport and handle products in accordance with manufacturer's instructions.

B. Promptly inspect shipments to ensure that products comply with requirements, quantities are correct, and products are undamaged.

C. Provide equipment and personnel to handle products by methods to prevent soiling, disfigurement, or damage.

3.03 STORAGE AND PROTECTION

A. Store and protect products in accordance with manufacturers' instructions.

B. Store with seals and labels intact and legible.

C. Store sensitive products in weather tight, climate controlled, enclosures in an environment favorable to product.

D. For exterior storage of fabricated products, place on sloped supports above ground.

E. Cover products subject to deterioration with impervious sheet covering. Provide ventilation to prevent condensation and degradation of products.

F. Store loose granular materials on relatively solid, flat surfaces in a well-drained area. Prevent mixing with foreign matter.

G. Provide equipment and personnel to store products by methods to prevent soiling, disfigurement, or damage.

H. Arrange storage of products to permit access for inspection. Periodically inspect to verify products are undamaged and are maintained in acceptable condition.

END OF SECTION

SECTION 01700

EXECUTION REQUIREMENTS

PART 1 GENERAL

1.01 SECTION INCLUDES

A. Examination, preparation, and general installation procedures.

B. Surveying for laying out the work.

C. Cleaning and protection.

D. Closeout procedures, except payment procedures.

1.02 RELATED SECTIONS

A. Section 01300 - Administrative Requirements: Submittals procedures.

B. Section 01400 - Quality Requirements: Testing and inspection procedures.

C. Section 01500 - Temporary Facilities and Controls:

D. Section 01780 - Closeout Submittals: Project record documents, operation and maintenance data, warranties and bonds.

1.03 PROJECT CONDITIONS

A. Grade work areas to drain. Maintain excavations free of water. Provide, operate, and maintain pumping equipment.

B. Protect site from puddling or running water. Provide water barriers as required to protect site from soil erosion.

C. Ventilate enclosed areas to assist cure of materials, to dissipate humidity, and to prevent accumulation of dust, fumes, vapors, or gases.

D. Dust Control: Execute work by methods to minimize raising dust from construction operations. Provide positive means to prevent air-borne dust from dispersing into atmosphere.

E. Erosion and Sediment Control: Plan and execute construction by methods to control surface drainage from cuts and fills, from borrow and waste disposal areas. Prevent erosion and sedimentation.

1. Minimize amount of bare soil exposed at one time.

2. Provide temporary measures such as berms, dikes, and drains, to prevent water flow.

3. Construct fill and waste areas by selective placement to avoid erosive surface silts or clays.

4. Periodically inspect earthwork to detect evidence of erosion and sedimentation; promptly apply corrective measures.

F. Pollution Control: Provide methods, means, and facilities to prevent contamination of soil, water, and atmosphere from discharge of noxious, toxic substances, and pollutants produced by construction operations.

1.04 COORDINATION

A. Coordinate scheduling, submittals, and work of the various sections of the Project Manual to ensure efficient and orderly sequence of installation of interdependent construction elements, with provisions for accommodating items installed later.

B. Coordinate completion and clean-up of work of separate sections.

PART 2 PRODUCTS

2.01 PATCHING MATERIALS

A. New Materials: As specified in product sections; match existing products and work for patching and extending work.

B. Type and Quality of Existing Products: Determine by inspecting and testing products where necessary, referring to existing work as a standard.

C. Product Substitution: For any proposed change in materials, submit request for substitution described in Section 01600.

PART 3 EXECUTION

3.01 EXAMINATION

A. Verify that existing site conditions and substrate surfaces are acceptable for subsequent work. Beginning new work means acceptance of existing conditions.

B. Examine and verify specific conditions described in individual specification sections.

C. Prior to Cutting: Examine existing conditions prior to commencing work, including elements subject to damage or movement during cutting and patching. After uncovering existing work, assess conditions affecting performance of work. Beginning of cutting or patching means acceptance of existing conditions.

3.02 PREPARATION

A. Cut, move, or remove items as necessary for access to construction area. Replace and restore at completion where necessary.

B. Remove unsuitable material, such as brush, weeds, wood, metals, concrete and rocks. Load and haul removed materials and dispose of in an acceptable manner.

3.03 LAYING OUT THE WORK

A. Verify locations of survey control points prior to starting work.

B. Promptly notify District Inspector or Engineer of any discrepancies discovered.

C. Contractor shall locate and protect survey control and reference points.

D. Control datum for survey is that established by Owner provided survey.

E. Protect survey control points prior to starting site work; preserve permanent reference points during construction.

F. Promptly report to District Inspector or Engineer the loss or destruction of any reference point or relocation required because of changes in grades or other reasons.

G. Owner's surveyors will replace dislocated survey control points based on original survey control. Make no changes without prior written notice to Engineer.

H. Utilize recognized engineering survey practices.

I. Establish elevations, lines, grades and elevations. Locate and lay out by instrumentation and similar appropriate means.

J. Periodically verify layouts by same means.

K. Maintain a complete and accurate log of control and survey work as it progresses.

3.04 GENERAL INSTALLATION REQUIREMENTS

A. Install Products as specified in individual sections.

3.05 PROGRESS CLEANING

A. Maintain construction areas free of waste materials, debris, and rubbish. Maintain site in a clean and orderly condition.

B. Remove debris and rubbish from pipes and other closed spaces, prior to enclosing the space.

C. Collect and remove waste materials, debris, and rubbish from site periodically and dispose off-site.

3.06 PROTECTION OF INSTALLED WORK

A. Protect installed work and provide special protection where specified in individual specification sections.

B. Provide temporary and removable protection for installed Products. Control activity in immediate work area to prevent damage.

C. Prohibit traffic from landscaped areas.

3.07 FINAL CLEANING

A. Execute final cleaning prior to final project assessment.

B. Clean site; sweep paved areas, rake clean landscaped surfaces.

C. Remove waste and surplus materials, rubbish, and construction facilities from the site.

3.08 CLOSEOUT PROCEDURES

A. Make submittals that are required by governing or other authorities.

1. Provide copies to Engineer and Owner.

B. Accompany Project Coordinator on preliminary inspection to determine items to be listed for completion or correction in Contractor's Notice of Substantial Completion.

C. Notify District Inspector or Engineer when work is considered ready for Substantial Completion.

D. Submit written certification that Contract Documents have been reviewed, work has been inspected, and that work is complete in accordance with Contract Documents and ready for Engineer's review.

E. Correct items of work listed in executed Certificates of Substantial Completion and comply with requirements for access to Owner-occupied areas.

F. Accompany Project Coordinator on preliminary final inspection.

G. Notify Inspector or Engineer when work is considered finally complete.

H. Complete items of work determined by Inspector or Engineer's final inspection.

END OF SECTION

SECTION 01780

CLOSEOUT SUBMITTALS

PART 1 GENERAL

1.01 SECTION INCLUDES

A. Project Record Documents.

B. Warranties and bonds.

1.02 RELATED SECTIONS

A. Conditions of the Contract: Performance bond and labor and material payment bonds, warranty, and correction of work.

B. Section 01300 - Administrative Requirements: Submittals procedures, shop drawings, product data, and samples.

C. Section 01700 - Execution Requirements: Contract closeout procedures.

D. Individual Product Sections: Specific requirements for operation and maintenance data.

E. Individual Product Sections: Warranties required for specific products or Work.

F. Section 01785 - Project Evaluation.

1.03 SUBMITTALS

A. Project Record Documents: Submit documents to Engineer with claim for final Application for Payment.

B. Warranties and Bonds:

1. For equipment or component parts of equipment put into service during construction with Owner 's permission, submit documents within ten days after acceptance.

2. Make other submittals within ten days after Date of Substantial Completion, prior to final Application for Payment.

3. For items of Work for which acceptance is delayed beyond Date of Substantial Completion, submit within ten days after acceptance, listing the date of acceptance as the beginning of the warranty period.

C. Project Evaluation: Submit form to Engineer with claim for final Application for Payment.

PART 2 PRODUCTS - NOT USED

PART 3 EXECUTION

3.01 PROJECT RECORD DOCUMENTS

A. Maintain on site one set of the following record documents; record actual revisions to the Work:

1. Drawings.

2. Specifications.

3. Addenda.

4. Change Orders and other modifications to the Contract.

B. Ensure entries are complete and accurate, enabling future reference by Owner.

C. Store record documents separate from documents used for construction.

D. Record information concurrent with construction progress.

E. Specifications: Legibly mark and record at each product section description of actual products installed, including the following:

1. Manufacturer's name and product model and number.

2. Changes made by Addenda and modifications.

F. Record Drawings: Legibly mark each item to record actual construction including:

1. Measured depths of foundations in relation to finish main floor datum.

2. Measured depths of manholes in relation to rim elevation.

3. Measured horizontal and vertical locations of underground utilities and appurtenances, referenced to permanent surface improvements.

4. Field changes of dimension and detail.

5. Details not on original Contract drawings.

3.02 WARRANTIES AND BONDS

A. Obtain warranties and bonds, executed in duplicate by responsible Subcontractors, suppliers, and manufacturers, within ten days after completion of the applicable item of work. Except for items put into use with Owner's permission, leave date of beginning of time of warranty until the Date of Substantial completion is determined.

B. Verify that documents are in proper form, contain full information, and are notarized.

C. Co-execute submittals when required.

D. Retain warranties and bonds until time specified for submittal.

3.03 PROJECT EVALUATION FORM

A. See Section 01785 - PROJECT EVALUATION.

B. Complete all items on the Project Evaluation Form and submit with final Application for Payment.

C. Owner and Engineer shall also each complete the Project Evaluation form; which will be included with the Project file for use in future evaluation of the Contractor.

END OF SECTION

SECTION 01785

PROJECT EVALUATION

PART 1 GENERAL

1.01 SECTION INCLUDES

A. Project Evaluation Document.

1.02 RELATED SECTIONS

A. Section 01780 - Closeout Submittals.

1.03 SUBMITTALS

A. Project Evaluation: Document must be submitted to Engineer with claim for final Application for Payment.

1.04 PROJECT EVALUATION

A. Project to be evaluated by the Owner, Engineer and Contractor.

B. Project evaluation by Owner and Engineer will be used to rate the Contractor's performance; which will be used to determine Contractor's qualification for future projects with the Owner.

C. Evaluation shall be done on a five-point system; with 5 being excellent, 1 being poor and N/A for items which do not apply.

D. The following areas are to be evaluated.

E. Contract: How well was the Contract followed.

1. Time: _____.
2. Materials: _____.
3. Pricing: _____.
4. Bid: _____.
5. Change Orders: _____.
6. Warranties: _____.

F. Quality of Work.

1. Workmanship: _____.
2. Materials: _____.
3. Equipment Used: _____.

G. Quality of Materials.

1. Storage on Site: _____.
2. Care to Prevent Damage: _____.

H. Red-Line Drawings.

1. Provided: _____.

2. Quantity: _____.

3. On Time: _____.

I. Working Relationships.

1. Owner's Engineer: _____.

2. Owner's Employees: _____.

3. General Public: _____.

4. Property Owners: _____.

J. Contractor's Performance on Previous Projects with Owner.

1. Owner: _____.

2. Engineer: _____.

K. COMMENTS: _____
_____
_____
_____
_____
_____

END OF SECTION

SRF SPECIAL CONDITIONS

CERTIFICATION REGARDING DEBARMENT, SUSPENSION, INELIGIBILITY AND VOLUNTARY EXCLUSION LOWER TIER COVERED TRANSACTIONS

Instructions for Certification

1. By signing and submitting this proposal, the prospective lower tier participant is providing the certification set out below.

2. The certification in this clause is a material representation of fact upon which reliance was placed when this transaction was entered into. If it is later determined that the prospective lower tier participant knowingly rendered an erroneous certification, in addition to other remedies available to the Federal Government the department or agency with which this transaction originated may pursue available remedies, including suspension and/or debarment.

3. The prospective lower tier participant shall provide immediate written notice to the person to which this proposal is submitted if at any time the prospective lower tier participant learns that its certification was erroneous when submitted or had become erroneous by reason of changed circumstances.

4. The terms covered transaction, debarred, suspended, ineligible, lower tier covered transaction, participant, person, primary covered transaction, principal, proposal, and voluntarily excluded, as used in this clause, have the meaning set out in the Definitions and Coverage sections of rules implementing Executive Order 12549. You may contact the person to which this proposal is submitted for assistance in obtaining a copy of those regulations.

5. The prospective lower tier participant agrees by submitting this proposal that, should the proposed covered transaction be entered into, it shall not knowingly enter into any lower tier covered transaction with a person who is proposed for debarment under 48 CFR part 9, subpart 9.4, debarred, suspended, declared ineligible, or voluntarily excluded from participation in this covered transaction, unless authorized by the department or agency with which this transaction originated.

6. The prospective lower tier participant further agrees by submitting this proposal that it will include this clause titled "Certification Regarding Debarment, Suspension, Ineligibility and Voluntary Exclusion-Lower Tier Covered Transaction," without modification, in all lower tier covered transactions and in all solicitations for lower tier covered transactions.

7. A participant in a covered transaction may rely upon a certification of a prospective participant in a lower tier covered transaction that it is not proposed for debarment under 48 CFR part 9, subpart 9.4, debarred, suspended, ineligible, or voluntarily excluded from covered transactions, unless it knows that the certification is erroneous. A participant may decide the method and frequency by which it determines the eligibility of its principals. Each participant may, but is not required to, check the List of Parties Excluded from Federal Procurement and Nonprocurement Programs.

8. Nothing contained in the foregoing shall be construed to require establishment of a system of records in order to render in good faith the certification required by this clause. The knowledge and information of a participant is not required to exceed that which is normally possessed by a prudent person in the ordinary course of business dealings.

9. Except for transactions authorized under paragraph 5 of these instructions, if a participant in a covered transaction knowingly enters into a lower tier covered transaction with a person who is proposed for debarment under 48 CFR part 9, subpart 9.4, suspended, debarred, ineligible, or voluntarily excluded from participation in this transaction, in addition to other remedies available to the Federal Government, the department or agency with which this transaction originated may pursue available remedies, including suspension and/or debarment.

Certification Regarding Debarment, Suspension, Ineligibility and Voluntary Exclusion--Lower Tier Covered Transactions

1. The prospective lower tier participant certifies, by submission of this proposal, that neither it nor its principals is presently debarred, suspended, proposed for debarment, declared ineligible, or voluntarily excluded from participation in this transaction by any Federal department or agency.

2. Where the prospective lower tier participant is unable to certify to any of the statements in this certification, such prospective participant shall attach an explanation to this proposal.

_____

Organization Name

_____

Name and Title of Authorized Representative

_____

Signature

Date

REQUIRED SIGNS AND POSTERS

The following signs and posters required for the project, include but are not limited to:

1.	Minimum Wage Poster	www.dol.gov/agencies/whd/posters/flsa
2.	Equal Opportunity Employer Poster:	www.dol.gov/agencies/ofccp/posters
3.	OSHA Poster	www.osha.gov/publications/poster

PROHIBITION AGAINST
LISTED VIOLATING FACILITIES

A. REQUIREMENTS

(1) To comply with all the requirements of section 114 of the Clean Air Act, as amended (42 U.S.C. 1857, et seq., as amended by Pub. L. 92-604) and section 308 of the Clean Water Act (33 U.S.C. 1251, as amended), respectively, which relate to inspection, monitoring, entry, reports, and information, as well as other requirements specified in section 114 and section 308 of the Air Act and the Water Act, respectively, and all regulations and guidelines issued thereunder before the award of this contract.

(2) That no portion of the work required by this prime contract will be performed in a facility listed on the Environmental Protection Agency list of violating facilities on the date when this contract was awarded unless and until the EPA eliminates the name of such facility or facilities from the listing.

(3) To use his best efforts to comply with clean air and clean water standards at the facilities in which the contract is being performed.

(4) To insert the substance of the provisions of this clause, including this paragraph (4), in any nonexempt subcontract.

B. DEFINITIONS

(1) Air Act means the Clean Air Act, as amended (42 U.S.C. 1857 et seq.).

(2) Water Act means the Clean Water Act, as amended (33 U.S.C. 1251 et seq.).

(3) Clean Air Standards means any enforceable rules, regulations, guidelines, standards, limitations, orders, controls, prohibitions, or other requirements which are contained in, issued under, or otherwise adopted under the Air Act or Executive Order 11738, an applicable implementation plan as described in section 110 (d) of the Air Act (42 U.S.C. 1857c-5(d)), an approved implementation procedure or plan under section 111 (c) or section 111(d), or an approved implementation procedure under section 112(d) of the Air Act (42 U.S.C. 1857c-7(d)).

(4) Clean Water Standards means any enforceable limitation, control, condition, prohibition, standard, or other requirement which is promulgated under the Water Act or contained in a permit issued to a discharger by the Environmental Protection Agency or by a State under an approved program, as authorized by section 402 of the Water Act (33 U.S.C. 1342), or by a local government to ensure compliance with pretreatment regulations as required by section 307 of Water Act (33 U.S.C. 1317).

(5) Compliance means compliance with clean air or water standards. Compliance shall also mean compliance with a schedule or plan ordered or approved by a court of competent

jurisdiction, the Environmental Protection Agency in accordance with the requirements of the Air Act or Water Act and regulations.

(6) Facility means any building, plant, installation, structure, mine, vessel, or other floating craft, location, or site of operations, owned, leased, or supervised by a contractor or subcontractor, to be used in the performance of a contract or subcontract. Where a location or site of operations contains or includes more than one building, plant, installation, or structure, the entire location or site shall be deemed to be a facility except where the Director, Office of Federal Activities, Environmental Protection Agency, determines that independent facilities are located in one geographical area.

WILLIAMS-STEIGER OCCUPATIONAL SAFETY AND HEALTH ACT OF 1970

A. AUTHORITY

(1) The contractor is subject to the provisions of the Williams-Steiger Occupational Safety and Health Act of 1970.

(2) These construction documents and the joint and several phases of construction hereby contemplated are to be governed, at all times, by applicable provisions of the Federal law(s), including but not limited to the latest amendment of the following:

a. Williams-Steiger Occupational Safety and Health Act of 1970, Public Law 94-596;

b. Part 1910 - Occupational Safety and Health Standards, Chapter XVII of Title 29, Code of Federal Regulations;

c. Part 1926 - Safety and Health Regulations for Construction, Chapter XVII of Title 29, Code of Federal Regulations.

B. SAFETY AND HEALTH PROGRAM REQUIREMENTS

(1) This project, its prime contractor and its subcontractors, shall at all times be governed by Chapter XVII of Title 29, Code of Federal Regulations, Part 1926 - Safety and Health Regulations for Construction (29 CFR 22801), as amended to date.

(2) To implement the program and to provide safe and healthful working conditions for all persons, general project safety meetings will be conducted at the site at least once each month during the course of construction, by the construction superintendent or his/her designated safety officer. Notice of such meeting shall be issued not less than three (3) days prior, stating the exact time, location, and agenda to be included. Attendance by the owner, architect, general foreman, shop steward(s), and trades, or their designated representatives, witnessed in writing as such, shall be mandatory.

(3) To further implement the program, each trade shall conduct a short gang meeting, not less than once a week, to review project safety requirements mandatory for all persons during the coming week. The gang foreman shall report the agenda and specific items covered to the project superintendent, who shall incorporate these items in his/her daily log or report.

(4) The prime contractor and all subcontractors shall immediately report all accidents, injuries, or health hazards to the owner and architect, or their designated representatives, in writing. This shall not obviate any mandatory reporting under the provisions of the Occupational Safety and Health Act of 1970.

(5) This program shall become a part of the contract documents and the contract between the owner and prime contractor, prime contractor and all subcontractors, as though fully written therein.

ANTI-KICKBACKS

Contractor shall comply with the Copeland "Anti-Kickback" Act (18 U.S.C. 874) as supplemented in the Department of Labor Regulations (29 CFR, Part 3). This Act provides that Contractor is prohibited from inducing, by any means, any person employed in the construction, completion, or repair of public work, to give up any part of the compensation to which he is otherwise entitled.

Contractor certifies and warrants that no gratuities, kickbacks and contingency fees were paid in connection with this contract, nor were any fees, commissions, gifts, or other considerations made contingent upon the award of this contract.

Contractor certifies that, to Contractor's knowledge, no state employee has any personal or beneficial interest whatsoever in the services described in this Contract.

No staff member of Contractor, compensated either partially or wholly with funds disbursed pursuant to the Contract, shall engage in any Contract or activity which would constitute a conflict of interest as related to this Contract.

DISCOVERY OF ARCHAEOLOGICAL AND OTHER HISTORICAL ITEMS

In the event of an archaeological find during any phase of construction, the following procedure will be followed:

1. Construction shall be halted, with as little disruption to the archaeological site as possible.
2. Contractor shall notify Owner who shall contact the State Historic Preservation Officer.
3. The State Historic Preservation Officer may decide to have an archaeologist inspect the site and make recommendations about the steps needed to protect the site, before construction is resumed.
4. The entire event should be handled as expediently as possible in order to hold the loss in construction time to a minimum while still protecting archaeological finds.

A similar procedure should be followed with regard to more recent historical resources. Should any artifacts, housing sites, etc., be uncovered, the same procedure should be followed as for an archaeological find.

In the event archaeological/historical data are evaluated to meet National Register criteria, the Advisory Council on Historic Preservation may be notified and asked to comment by the Utah State Revolving Fund Program.

ACCESS

Contractor and loan recipient shall insure that authorized representatives of the Utah DEQ, State Historic Preservation Office, US EPA, Comptroller General, Inspector General, and other applicable federal and state agencies and officials will have access to the project work whenever it is in preparation or progress and shall provide proper facilities for such access and inspection. Contractor shall allow these representatives to have access to any books, documents, plans, reports, papers, and other records of Contractor which are pertinent to the project for the purpose of making audit, examination, excerpts, copies and transcriptions thereof and to interview any officer or employee. Contractor shall insure that all subagreements will also afford access to such project work, sites, documents, records, and persons.

SITE EROSION AND SEDIMENT CONTROL MEASURES

Every effort shall be made by Contractor and subcontractors to prevent and correct problems associated with erosion and runoff processes which could occur during and after project construction. The efforts should be consistent with applicable local ordinances and the Nonpoint Source Pollution Control Guidance. Whenever appropriate, Contractor's efforts shall reflect the following engineering principles:

(a) When appropriate, land grading and excavating should be kept at a minimum to reduce the possibility of creating runoff and erosion problems which require extensive control measures.
(b) Whenever possible, topsoil should be removed and stockpiled before grading begins.
(c) Land exposure should be minimized in terms of area and time.
(d) Exposed areas subject to erosion should be covered as quickly as possible by means of mulching or vegetation.
(e) Natural vegetation should be retained whenever feasible.
(f) Early completion of stabilized drainage systems (temporary and permanent systems) will substantially reduce erosion potential.
(g) Roadways and parking lots should be paved or otherwise stabilized as soon as feasible.
(h) Clearing and grading should not be started until a firm construction schedule is known and can be effectively coordinated with grading and clearing activity.

UPDES CONSTRUCTION RELATED DISCHARGE PERMITS

Construction projects which will disturb one or more acres will require coverage under the State of Utah General Permit for Storm Water Discharges Associated with Large Construction Activities. Contractor is responsible for obtaining coverage under the appropriate permit and maintaining compliance until Owner accepts the Work as complete. For additional information see http://www.waterquality.utah.gov/UPDES/stormwatercon.htm.

Certain construction activities such as dewatering, flushing, testing, and disinfection require coverage under the State of Utah General Permit for Temporary Discharges or under a separate discharge permit. Contractor is responsible for obtaining any necessary coverage and maintaining compliance. For more information see **http://www.waterquality.utah.gov/UPDES/stormwatercon.htm**.

AIR QUALITY PROTECTION MEASURES

Contractor shall adhere to effective dust control procedures as required under the Utah Air Quality Standards and Regulations UAC R307. If asbestos is encountered during this project, Contractor shall follow standards for handling according to UAC R307-801. Contractor shall adhere to proper trade waste and materials disposal.

PRESERVATION OF OPEN COMPETITION AND GOVERNMENT NEUTRALITY TOWARDS GOVERNMENT CONTRACTORS' LABOR RELATIONS ON FEDERAL AND FEDERALLY FUNDED CONSTRUCTION PROJECTS

The assistance recipient agrees to comply with Executive Order 13202 (Feb. 22, 2001, 66 Federal Register 11225) of February 17, 2001, entitled "Preservation of Open Competition and Government Neutrality Towards Government Contractors' Labor Relations on Federal and Federally Funded Construction Projects," as amended by Executive Order 13208 (April 11, 2001, 66 Federal Register 18717) of April 6, 2001, entitled "Amendment to Executive Order 13202, Preservation of Open Competition and Government Neutrality Towards Government Contractors' Labor Relations on Federal and Federally Funded Construction Projects.

Amend 48 CFR Part 36.202 by adding paragraph (d) to read as follows:

(d) In accordance with Executive Order 13202, of February 17, 2001, Preservation of Open Competition and Government Neutrality Towards Government Contractors' Labor Relations on Federal and Federally Funded Construction Projects, as amended on April 6, 2001—

(1) The Government, or any construction manager acting on behalf of the Government, must not—

(i) Require or prohibit offerors, contractors, or subcontractors to enter into or adhere to agreements with one or more labor organizations (as defined in 42 U.S.C. 2000e(d)) on the same or other related construction projects; or

(ii) Otherwise discriminate against offerors, contractors, or subcontractors for becoming, refusing to become, or remaining signatories or otherwise adhering to agreements with one or more labor organizations, on the same or other related construction projects.

(2) Nothing in this paragraph prohibits offerors, contractors, or subcontractors from voluntarily entering into project labor agreements.

(3) The head of the agency may exempt a construction project from this policy if the agency head finds that, as of February 17, 2001—

(i) The agency or a construction manager acting on behalf of the Government had issued or was a party to bid specifications, project agreements, agreements with one or more labor organizations, or other controlling documents with respect to that particular project, which contained any of the requirements or prohibitions in paragraph (d)(1) of this section; and

(ii) One or more construction contracts subject to such requirements or prohibitions had been awarded.

(4) The head of the agency may exempt a particular project, contract, or subcontract from this policy upon a finding that special circumstances require an exemption in order to avert an imminent threat to public health or safety, or to serve the national security. A finding of "special circumstances" may not be based on the possibility or presence of a labor dispute concerning the use of contractors or subcontractors who are nonsignatories to, or otherwise do not adhere to, agreements with one or more labor organizations, or concerning employees on the project who are not members of or affiliated with a labor organization.

DIVISION 02

SITE CONSTRUCTION

SECTION 02100

MEASUREMENT AND PAYMENT

PART 1 GENERAL

1.01 SECTION INCLUDES

A. Measurement and payment for TOP OF MOUNTAIN WATER SYSTEM & PUMPHOUSE #5 Includes:

No.	ITEM
1	MOBILIZATION
2	TRAFFIC CONTROL
3	CONSTRUCT AND MAINTAIN EROSION CONTROL: BMP'S
4	GENERAL SITE WORK AT PUMPHOUSE #5 SITE AND PIPELINES, COMPLETE INCLUDING CLEARING AND GRUBBING, GENERAL EXCAVATION, GRADING, BACKFILL, AND ALL APPURTENANT WORK
5	GENERAL SITE WORK AT NORTH ACCESS ROAD, COMPLETE INCLUDING CLEARING AND GRUBBING, GENERAL EXCAVATION, GRADING, BACKFILL, AND ALL APPURTENANT WORK
6	COMPLETE INVESTIGATIVE POTHOLES TO LOCATE EXISTING WATER PIPELINE, UTILITY CROSSINGS, AND OTHER MISC. UTILITIES REQUIRED, COMPLETE
7	FURNISH AND INSTALL PUMPHOUSE PLUMBING INCLUDING; DUCTILE IRON PIPE, FITTINGS, AND ALL APPURTENANCES FROM CONNECTION TO EXISITNG PIPELINE OUTSIDE OF NEW BUILDING AND ALL PIPING INSIDE BUILDING, COMPLETE
8	NOT USED
9	FURNISH AND INSTALL; 1500 GPM PUMP (TDH=120-FT) (75 HP) (PENTAIR AURORA 413 SERIES 8X8X11) UL LISTED FIRE PUMP REQ'D W/ CONCRETE PEDESTAL , PUMP CONTROLS WITH VFD, AND ALL APPURTENANCES, COMPLETE *(NOTE: ELECTRICAL EQUIPMENT FOR PUMPS SHALL BE FURNISHED AND INSTALLED BY OTHERS)*
10	FURNISH AND INSTALL; SKID MOUNTED PUMP STATION WITH GRUNDFOS PUMPS; TWO PUMPS (HYDRO MPC-E 2CRE) (20 GPM @ TDH=150') (5 HP) SYSTEM INCLUDES: UPSTREAM; ISOLATION VALVE AND PRESSURE GAUGE, DOWNSTREAM; CHECK VALVE ISOLATION VALVE AND PRESSURE GAUGE W/ CONCRETE PEDESTAL, AND ALL APPURTENANCES, COMPLETE *(NOTE: ELECTRICAL EQUIPMENT FOR PUMPS SHALL BE FURNISHED AND INSTALLED BY OTHERS)*
11	CONSTRUCT NEW WOOD FRAMED PUMP HOUSE, GENERATOR ROOM, AND PUMP TO WASTE ENCLOSURE ON NEW CONCRETE FOUNDATION, COMPLETE, INCLUDING MODIFICATIONS TO EXISTING PUMPHOUSE AND; ALL REQUIRED STRUCTURAL EARTHWORK, CONCRETE WORK AND REINFORCEMENT, METAL DOORS AND FRAMES, CARPENTRY WORK, INSULATION, METAL ROOF SYSTEM & TRIM, STEEL STEPS, AND ALL APPURTENANT WORK *(NOTE: ELECTRICAL EQUIPMENT FOR BUILDING INCLUDING; OUTLETS, LIGHTING, HEATERS, EXHAUST FANS, AND GENERATOR(S) SHALL BE FURNISHED AND INSTALLED BY OTHERS)*
12	CONSTRUCT PUMP PEDESTAL, COMPLETE
13	CONSTRUCT 6" THICK CONCRETE PAD SITE IMPROVEMENTS, COMPLETE
14	FURNISH AND INSTALL 12" PVC SDR-35 DRAIN PIPE, COMPLETE
15	FURNISH AND INSTALL 18" RCP DRAIN PIPE, COMPLETE
16	CORE CUT EXISTING CONCRETE DRAIN BOX FOR NEW 12" PVC DRAIN CONNECTION, COMPLETE
17	FURNISH AND INSTALL 2'x4' DRAIN BOX WITH GRATE, OR 4' DIAMETER MANHOLE, INSIDE BUILDING, COMPLETE
18	FURNISH AND INSTALL 4'x4' DRAIN BOX WITH GRATE, OR 5' DIAMETER MANHOLE, AND 9 L.F. 12" RCP, AT NORTH ACCESS ROAD, COMPLETE
19	FURNISH AND INSTALL 4'x4' DRAIN BOX WITH GRATE, FOR 18" DRAIN EXTENSION, COMPLETE
20	FURNISH AND INSTALL 5' DIAMETER STORM DRAIN MANHOLE, FOR 18" DRAIN EXTENSION, COMPLETE

21	CONSTRUCT PARKING AREA SURFACE; FURNISH, PLACE, AND COMPACT GENERAL FILL (TYPE I) SURFACES (THICKNESS VARIES), COMPLETE; INCLUDING ALL REQUIRED EARTHWORK AND FINE GRADING PROVIDING POSITIVE DRAINAGE AWAY FROM BUILDINGS
22	CONSTRUCT NORTH ACCESS ROAD; PLACE, AND COMPACT NATIVE GENERAL FILL (TYPE I) SURFACES (THICKNESS VARIES), COMPLETE; INCLUDING ALL REQUIRED EARTHWORK
23	FURNISH AND INSTALL 2-INCH DIAMETER HDPE (DR 11) CULINARY WATER PIPE AT 9-FT DEEP (MIN.), COMPLETE
24	INSTALL 8-INCH DIAMETER WELDED HDPE (DR 11) CULINARY WATER PIPE AT 9-FT DEEP (MIN.), COMPLETE (PIPE SUPPLIED BY DISTRICT FITTINGS SUPPLIED BY CONTRACTOR)
25	FURNISH AND INSTALL 10-INCH DIAMETER WELDED HDPE (DR 11) CULINARY WATER PIPE AT 9-FT DEEP (MIN.), COMPLETE
26	FURNISH AND INSTALL 10-INCH DIAMETER WELDED HDPE (DR 11) CULINARY WATER PIPE AT 7-FT DEEP (MIN.), COMPLETE
27	FURNISH AND INSTALL 6-INCH DIAMETER DUCTILE IRON (CL 150) CULINARY WATER PIPE AT 9-FT DEEP (MIN.), COMPLETE
28	FURNISH AND INSTALL 10-INCH HDPE (DR11) OR PVC (C900) 45 DEG. BEND, COMPLETE
29	FURNISH AND INSTALL 8-INCH DIAMETER GATE VALVE, COMPLETE
30	FURNISH AND INSTALL 10-INCH DIAMETER GATE VALVE, COMPLETE
31	FURNISH AND INSTALL AIR VACUUM RELIEF VALVE (ARV), COMPLETE (SEE DETAIL A/D.101)
32	INSTALL 8-INCH DIAMETER WELDED HDPE (DR 11) DRAIN PIPE AT (ARV), COMPLETE (PIPE SUPPLIED BY DISTRICT FITTINGS SUPPLIED BY CONTRACTOR)
33	FURNISH AND INSTALL HDPE (DR11) OR PVC (C900) 10"X10"X8" TEE, COMPLETE
34	EXISTING WATER SERVICE: CAP AND PLUG CONNECTION TO EXISTING 4" DIP AND RECONNECT TO NEW 10" WATER MAIN, COMPLETE.
35	FURNISH AND INSTALL 10-INCH HDPE (DR11) OR PVC (C900) CONNECTION AT EXISTING 10" PVC (C900), COMPLETE
36	FURNISH AND INSTALL FIRE HYDRANT ASSEMBLY, COMPLETE (SEE DETAIL C/D.104)
37	FURNISH AND INSTALL 8"X2" HDPE (DR11) REDUCER, COMPLETE
38	FURNISH AND INSTALL 2-INCH HDPE (DR11) 45 DEG. BEND, COMPLETE
39	FURNISH AND INSTALL 2-INCH WATER SERVICE LINE CONNECTION TO EXISTING 1½" WATER SERVICE LINE, COMPLETE (SEE DETAIL B/D.104)
40	FURNISH AND INSTALL 1-INCH DIAMETER CULINARY WATER METER, COMPLETE
41	FURNISH AND INSTALL HDPE THRUST BLOCK, COMPLETE (SEE DETAIL B/D.102)
42	FURNISH AND INSTALL PRE-CAST CONCRETE PRV VAULT INCLUDING; PRE-CAST VAULT, ALL PIPING AND FITTINGS SHOWN ON DETAIL (EXCEPT FOR 6" DIP, KEY NOTE #21 WHICH IS TO BE PAID PER L.F. PER BID ITEM #25), LIGHT, AND HEATING EQUIPMENT, AND ELECTRICAL EQUIPMENT, COMPLETE (SEE SHEET C.504 / DETAIL B)
43	FURNISH AND PLACE 6" D50 RIPRAP DOWNSTREAM FROM ARV DRAIN, COMPLETE
44	FURNISH AND PLACE NATIVE SEED MIX, OVER ALL DISTURBED UNIMPROVED AREAS WITH SLOPES UP TO 10%, COMPLETE
45	FURNISH AND PLACE EROSION CONTROL BLANKET, DEWITT #AEC-SEGRN4 (OR EQUAL), WITH NATIVE SEED MIX, OVER ALL DISTURBED UNIMPROVED AREAS WITH SLOPES OVER 10%

	ADDITIVE BID ALTERNATES
46	INSTALL 10-INCH DIAMETER PVC (C900) CULINARY WATER PIPE AT 9-FT DEEP (MIN.), COMPLETE
47	INSTALL 10-INCH DIAMETER PVC (C900) CULINARY WATER PIPE AT 7-FT DEEP (MIN.), COMPLETE
48	FURNISH IMPORTED GENERAL FILL (TYPE I) (IF REQ'D)
49	FURNISH IMPORTED STRUCTURAL FILL (TYPE II) (IF REQ'D)
50	FURNISH IMPORTED BORROW MATERIAL FOR PIPE BEDDING (IF REQ'D)
51	FURNISH IMPORTED BORROW MATERIAL FOR TRENCH BACKFILL (IF REQ'D)
52	COMPLETE ROCK EXCAVATION, COMPLETE (IF REQ'D)

B. Measurement and payment for TOP OF MOUNTAIN WATER SYSTEM & PUMPHOUSE #5 Does NOT Include the following items to be supplied and installed by Electrical Contractor and/or Controls Contractor to be Contracted separately with the DISTRICT:

a. Furnishing and installing electrical system for booster pump station (Bid Item #11), including; outlets, lighting, heaters, and exhaust fans.
b. Furnishing and installing standby generator (Bid Item #11), including; electrical equipment, fuel tank and all required appurtenances.
c. Furnishing and installing pump controls with VFD (Bid Item #9 & #10), (Note: pump controls and VFD to be included with skid mounted pump station and included with Bid Item #10)
d. Furnishing and installing electrical system and instruments for PRV Vault (Bid Item #42), including; outlets, lighting, heaters, and exhaust fans.
e. Furnishing and installing flow meters and instruments for pump station (Bid Item #11), including; outlets, lighting, heaters, and exhaust fans.

1.02 RELATED SECTIONS

A. Section 01270 - Unit Prices: criteria applicable to Work performed under a unit price or lump sum price payment method.

1.03 MEASUREMENT AND PAYMENT

A. Measurement shall be made in units or lump sums, as described below.

B. Payment shall be made at the unit price or lump sum price bid in the bid schedule for the items described below; which shall be payment in full for all costs of furnishing labor, tools, equipment, materials, testing, etc., to complete the items of work as specified and as indicated on the drawings.

C. Bid items shown with letter and number, indicating schedule and item number.

D. Mobilization (Bid Schedule Item 1):

1. Basis for Measurement: Lump Sum.

2. Basis for Payment: Includes all preparatory work and operations, such as movement of personnel, supplies and incidental items to the project site; establishment of offices and other facilities necessary for work on the project; furnishing, erecting and maintaining construction signs and barricades, and all other work and operations which must be performed or cost incurred prior to beginning work on the project.

E. Traffic Control (Bid Schedule Item 2):

1. Basis for Measurement: Lump Sum.

2. Basis for Payment: Includes all preparatory work and operations to maintain safe traffic operation adjacent to project site.

.

F. Erosion Control (Bid Schedule Item 3):

1. Basis for Measurement: Lump Sum.

2. Basis for Payment: Includes all preparatory work and operations, such as movement of personnel, supplies and incidental items to the project site; necessary to construct and maintain erosion control elements based on standard Best Management Practices (BMPs) for work on the project; furnishing, erecting and maintaining BMPs.

G. General Sitework at Pumphouse #5 Site and Pipelines (Bid Schedule Item 4):

1. Basis for Measurement: Lump Sum.

2. Basis for Payment: Includes: Site clearing and grubbing; general excavating and grading to required elevations for work area; loading and placing materials in stockpile if it is to be re-used; removing excess and unsuitable material from site and disposing of material in an acceptable manner; backfilling around concrete work to required elevations; compacting backfill material; constructing embankments, to include placing, grading, shaping and compacting embankment materials; and all appurtenant work.

H. NOT USED (Bid Item No. 5):

I. Investigative Pothole (Bid Item No. 6):

1. Basis for Measurement: By the unit for each investigative pothole actually completed.

1. Basis for Payment: shall constitute full compensation for saw cutting, demolition, removal and disposal of old asphalt, road base and waste materials, dewatering trench, excavation regardless of depth, measuring depth to utility, investigation and documentation of conditions, furnishing and placing backfill material and untreated base course, compaction, surface restoration, or any other appurtenant items of work for which separate payment is not otherwise specifically provided in the Bid Sheets.

J. Plumbing System for Booster Pump House (Bid Item No. 7):

1. Basis for Measurement: Lump Sum.

2. Basis for Payment: Includes all required earthwork, to include excavating trenches, backfilling trenches and compacting backfill; furnishing and installing plumbing system, complete, including pipe, fittings, valves, pump control valves, surge anticipation valves, couplings, pressure gauges, floor drains, pipe supports, and all appurtenant items; furnishing and installing pumps, electric motors, pump discharge heads, and all appurtenant items; and all appurtenant work to complete the plumbing system.

K. NOT USED (Bid Item No. 8):

L. 1,500 GPM Pump (Bid Item No. 9):

1. Basis for Measurement: Lump Sum.

2. Basis for Payment: Furnishing and installing pumps, electric motors, pump discharge heads, and all appurtenant work to complete the pump installation.

M. Skid Mounted Pump Station (Bid Item No. 10):

1. Basis for Measurement: Lump Sum.

2. Basis for Payment: Furnishing and installing skid mounted pump station package complete, and all appurtenant work to complete the pump installation.

N. Construct Pump Station Building, Complete (Bid Schedule Item 11):

1. Basis for Measurement: Lump Sum.

2. Basis for Payment: Includes all required earthwork, to include excavating for structure, backfilling around concrete work, and compacting backfill; scarifying and compacting substrate surfaces; furnishing, placing and compacting gravel base material, as indicated; concrete work; masonry work; carpentry work, including roof structure, roof decking and related work; miscellaneous metal work; furnishing and installing metal roof system, including fascia, soffits, rain gutters and downspouts; furnishing and installing metal doors and frames, to include finish hardware; furnishing and installing louvers; furnishing and installing prefabricated steel steps; painting; installing electrical housekeeping pad(s), and all appurtenant work to complete the structure.

O. Modifications To Existing Pump Station Building Roof and Walls (Bid Schedule Item 11):

1. Basis for Measurement: Lump Sum.

2. Basis for Payment: Includes all required work to modify existing pump station building; removing and disposing of a portion of existing metal roof, removing and salvaging a portion of siding from existing walls, dismantling, removing and disposing of a portion of existing structure; and all appurtenant work required to complete modifications of the existing pump station roof and walls; disposing of all items that are not to be salvaged, as directed; and cleaning up the site as required after the modification is completed.

P. Clean and Repair Existing Concrete Structure (Bid Schedule Item 11):

1. Basis for Measurement: Lump Sum.

2. Basis for Payment: Includes all required work for cleaning and repairing of existing pump station building concrete; pressure wash all surfaces, inspect and repair and concrete defects on the existing structure, prepare clean, solid surfaces for new construction improvements.

Q. Excavating for Structures (Bid Schedule Item 11):

1. Basis for Measurement: Measurement for structural excavation shall be made and included in the unit price or lump sum price bid for the item of work that requires excavation.

2. Basis for Payment: Includes excavating to required elevations, loading and placing materials in stockpile if it is to be re-used, removing excess and unacceptable material from site, backfilling excavations around structures, and compacting.

R. Construct Concrete Pump Pedestal, Complete (Bid Schedule Item 12):

1. Basis for Measurement: By the unit of each item constructed.

2. Basis for Payment: Includes all required earthwork, to include excavating for structure, backfilling around concrete work, and compacting backfill; scarifying and compacting substrate surfaces; furnishing, placing and compacting gravel base material, as indicated; concrete work; steel reinforcement material and work; and all appurtenant work to complete the structure.

S. Concrete Paving (Bid Schedule Item 13):

1. Basis for Measurement: By the square foot of concrete actually placed and compacted.

2. Basis for Payment: Includes all required earthwork, including excavating for surfacing, grading, backfilling, and compacting backfill; supplying gravel road base material; fine grading and compacting substrate surfaces; placing and compacting road base material to the thickness indicated and as directed; preparing base, to include fine grading; supplying concrete material to the site; placing material

to the thickness indicated.

3. Concrete paving placed outside the limits for surfacing, as indicated on the drawings, as described herein, and as directed by the Engineer, shall be at the Contractor's expense; with no additional cost to the Owner.

T. Drain Line (Bid Schedule Item 14,15,31):

1. Basis for Measurement: By the linear foot of pipe actually installed.

2. Basis for Payment: Includes all required earthwork, to include excavating for pipe trenches, backfilling trenches, and compacting backfill material; furnishing and installing pipe *(note: pipe materials for Bid Item #31 are to be supplied by DISTRICT),* fittings, and appurtenant items, of the type and size indicated; and all appurtenant work.

U. Core Cut Concrete Drain Boxes (Bid Item 16):

1. Basis for Measurement: By the unit of each core cut completed.

2. Basis for Payment: Includes all required earthwork, to include excavating to exposed existing structure, completing full thickness core cut to size required per plan, removing and disposing of cut materials, cleaning and preparation of core cut; and all appurtenant work.

V. Construct Concrete Drain Boxes and Manholes (Bid Item 17,18,19,20):

1. Basis for Measurement: By the unit of each box constructed.

2. Basis for Payment: Includes all required earthwork, to include excavating for structure, backfilling excavations, and compacting backfill; furnishing, placing, and compacting gravel base, to the thickness indicated; constructing concrete catch basin, as indicated and as directed, including precast concrete box, frame and grate, and all appurtenances; forming and sealing pipe inlets and outlets, as directed by the Engineer; connecting new pipe to new box with appropriate type couplings and grouting around new pipe, as directed; and all appurtenant work.

3. Basis for Payment for Bid Item #18 ONLY: Includes all required earthwork, to include excavating for pipe, backfilling excavations, and compacting backfill; furnishing, placing, and compacting gravel base, to the thickness indicated; constructing Reinforced Concrete Pipe (RCP), as indicated and as directed, including all appurtenances; and all appurtenant work.

W. Construct Access Road and Parking Area (Bid Item 21,22):

1. Basis for Measurement: By the square foot of access road and parking area actually constructed.

2. Basis for Payment: Includes all required earthwork, including excavating for roadway, grading, backfilling, and compacting backfill material; constructing embankments as required, to include placing, grading, shaping and compacting embankment materials; supplying specified surfacing material; fine grading and compacting substrate surfaces; placing and compacting road surfacing material to the thickness indicated and as directed;
3. Material placed outside the limits for road surfacing, as indicated on the drawings, as described herein, and as directed by the Engineer, shall be at the Contractor's expense; with no additional cost to the Owner.
4. Payment for this item is based on use of native materials screened and reclaimed from project. In the case that imported material is required payment for that material shall be based on payment item for a bi alternate item as described herein.

X. Borrow for Embankments (Bid Schedule Item 21,22):

1. Basis for Measurement: Measurement for general earthwork shall be made and included in the unit price or lump sum price bid for the item of work that requires borrow for embankments.

2. Basis for Payment: Includes supplying embankment material; stockpiling, placing and shaping embankment material, as indicated and as directed; and all appurtenant work.
   a. Borrow material placed outside the limits for embankments, as indicated on the drawings, as described herein, and as directed by the Engineer, shall be at the Contractor's expense; with no additional cost to the Owner.

3. Compaction of borrow for embankments shall be paid under "General Earthwork..."; and not as part of this item.

Y. 8-Inch Diameter HDPE Culinary Water Pipe and Fittings (Bid Item No. 24):

1. Basis of Measurement: By the linear foot of pipe actually installed.

2. Basis of Payment: Includes excavating trenches for installation of new pipe, as indicated on the drawings, to required elevations; loading and placing materials in stockpiles, if it is to be re-used in the project; removing excess and unsuitable material from the site and disposing of material in an acceptable manner; dewatering trench, shoring and bracing, excavation regardless of depth, placing and compacting borrow material for pipe bedding in pipe zone, as indicated; backfilling trenches above the pipe zone to required elevations; and compacting backfill material to required densities; installing HDPE culinary water pipe supplied by DISTRICT and furnishing and installing fittings with butt-welded joints, of the type and size as indicated, including all required equipment for welding and installing pipe; and all appurtenant work.

Z. 2-Inch and 10-inch Diameter HDPE Culinary Water Pipe and Fittings (Bid Item No. 23,25,26,46,47):

1. Basis of Measurement: By the linear foot of pipe actually installed.

2. Basis of Payment: Includes excavating trenches for installation of new pipe, as indicated on the drawings, to required elevations; loading and placing materials in stockpiles, if it is to be re-used in the project; removing excess and unsuitable material from the site and disposing of material in an acceptable manner; dewatering trench, shoring and bracing, excavation regardless of depth, placing and compacting borrow material for pipe bedding in pipe zone, as indicated; backfilling trenches above the pipe zone to required elevations; and compacting backfill material to required densities; furnishing and installing HDPE culinary water pipe and furnishing and installing fittings with butt-welded joints, of the type and size as indicated, including all required equipment for welding and installing pipe; and all appurtenant work.

AA. 6-Inch Diameter Culinary Water Ductile Iron Pipe (DIP), CL 150, and Fittings (Bid Schedule Item 27):

1. Basis of Measurement: By the linear foot of pipe actually installed.

1. Basis of Payment: Shall constitute full compensation for furnishing all labor, materials, and equipment for demolition, removal and disposal of waste materials, dewatering trench, shoring and bracing, excavation regardless of depth, furnishing and installing water main as indicated on the plans; including; sleeves, miscellaneous pipe, fittings, gaskets, nuts bolts, and approved joint restraining devices (mega-lugs); concrete thrust blocks; greasing and wrapping all fittings; poly-wrapping all ductile iron pipe, tracing wire and warning tape; pipeline dewatering; disinfection and commissioning pipeline; furnishing and placing of imported sand bedding pipe zone backfill, and 1 Grade Type A APWA trench zone backfill and untreated base course to grade in parking or un-paved roadway areas, compaction, parking or un-paved surface restoration, replacement of salvaged top soil along un-improved areas or any other appurtenant items of work for which separate payment is not otherwise specifically provided in the Bid Sheets.
2. Payment for tees and bends is included in a separate pay item.

AB. Furnish and Install Pipe Bend (Material and Size per Plan) (Bid Schedule Item 28):
1. Basis for Measurement: Measured and paid for on a per each basis for the actual quantity of bend fabricated and installed. Measurement to be by actual field count of each installed bend.

2. Basis for Payment: Shall constitute full compensation for saw cutting, demolition, removal and disposal of old, asphalt, road base and waste materials, dewatering trench, excavation regardless of depth of waterline, furnishing and installing bend as indicated on the plans or as directed miscellaneous pipe, fittings, gaskets , nuts bolts, and approved joint restraining devices; concrete thrust blocks; greasing and wrapping all fittings; pipeline dewatering; disinfection and commissioning pipeline; adjustment of valve box lids to final grade; concrete collars; or any other appurtenant items of work for which separate payment is not otherwise specifically provided in the Bid Sheets.

AC. Furnish and Install Gate Valve (Size and Material Per Plan) (Bid Schedule Item 29,30):

1. Basis for Measurement: Measured and paid for on a per each basis for the actual quantity of gate valves fabricated and installed. Measurement to be by actual field count of each installed gate valve.

2. Basis for Payment: Shall constitute full compensation for saw cutting, demolition, removal and disposal of old, asphalt, road base and waste materials, dewatering trench, excavation regardless of depth of waterline, furnishing and installing gate valve as indicated on the plans or as directed by the with 2-piece cast iron slip type valve box; tees, sleeves, bends, miscellaneous pipe, fittings, gaskets , nuts bolts, and approved joint restraining devices; concrete thrust blocks; greasing and wrapping all fittings; pipeline dewatering; disinfection and commissioning pipeline; adjustment of valve box lids to final grade; concrete collars; or any other appurtenant items of work for which separate payment is not otherwise specifically provided in the Bid Sheets.

AD. Pipe and Fittings (Bid Schedule Item 23,24,25,26,27,28,29,30,32,33,35,37,38):

1. Basis for Measurement: By the linear foot of pipe actually installed.

2. Basis for Payment: Includes hand trimming excavation; furnishing and installing pipe, of the size and type indicated; furnishing and installing all required fittings, as indicated; and all appurtenant work.

AE. Furnish and install Pre-Cast Concrete ARV and/or PRV Vault (Bid Item No. 31, 42):

1. Basis of Measurement: Measured and paid for By the unit of each vault constructed.
2. Basis of Payment: Shall constitute full compensation for furnishing the labor, materials, and equipment to complete an ARV and/or PRV Station vault as shown on the project plans including, excavation and compaction of foundation gravel, providing and installing a reinforced concrete vault, combination air / vacuum valves, shut off valves, exterior and interior piping, fittings, approved joint restraining devices (megalugs), hatches, interior mechanical components, structural and supports, switches, gauges, sump pump, painting, commissioning, disinfection and testing of the water system, connection to electrical power and appurtenances as per plans including items of work for which separate payment is not otherwise specifically provided in the Bid Sheets.

AF. Furnish and Install Tee (Material and Size per Plan) (Bid No. 33):
1. Basis for Measurement: Measured and paid for on a per each basis for the actual quantity of tee fabricated and installed. Measurement to be by actual field count of each installed tee.

2. Basis for Payment: Shall constitute full compensation for saw cutting, demolition, removal and disposal of old, asphalt, road base and waste materials, dewatering trench, excavation regardless of depth of waterline, furnishing and installing tee as indicated on the plans or as directed miscellaneous pipe, fittings, gaskets , nuts bolts, and approved joint restraining devices; concrete thrust blocks; greasing and wrapping all fittings; pipeline dewatering; disinfection and commissioning pipeline; adjustment of valve box lids to final grade; concrete collars; or any other appurtenant items of work for which separate payment is not otherwise specifically provided in the Bid Sheets.

AG. Cap and Plug Existing Water Service (Bid Schedule Item 34):

1. Basis for Measurement: By the unit for each existing water service cap and plug actually completed.

2. Basis for Payment: Includes all required work and earthwork, to; cut and construct permanent cap for existing water service as required to construct waterline improvements as indicated on plans.

AH. Existing Water Service: Abandon In Place and/or Remove As Required (Bid Schedule Item 34):

1. Basis for Measurement: By the linear foot of existing Water Service actually removed.

2. Basis for Payment: Includes all required work and earthwork, to; remove existing Water Service Pipe as required to construct waterline improvements as indicated on plans; loading and delivering items to be salvaged to DISTRICT, as directed; disposing of all items that are not to be salvaged, as directed, cap and plug existing water service to be abandoned in place; and cleaning up the site as required after the removal is completed.

AI. Connect New Water Lines to Existing Water Lines (Bid Schedule Item 35,36):

1. Basis for Measurement: Measurement for connecting new water lines to existing water lines shall be made and included in the unit price or lump sum price bid for the item of work that requires connecting new water lines to existing water lines.

2. Basis for Payment: Includes all required earthwork, to include excavating as required to locate and expose the existing water lines, backfilling trenches to required elevations, compacting backfill material as indicated; cutting, removing and disposing of sections existing pipe and fittings as required and as directed; furnishing and installing new pipe, fittings, couplings and appurtenant items as required and as directed; and all appurtenant work required to complete the connections.

AJ. Construct Fire Hydrant Assembly: (Bid Schedule Item 37):

1. Basis for Measurement: Measured and paid for on a per each basis by actual field count of each hydrant installed.

2. Basis for Payment: Shall constitute full compensation for furnishing and installing 6-inch Ductile Iron Pipe (DIP), Class 150, water pipe, furnishing and installing new fire hydrant per plan, connect the existing hydrant to the new main, 6-inch gate valve with 2-piece cast iron slip type valve box; tees, sleeves, bends, miscellaneous fittings, gaskets , nuts bolts, and approved joint restraining devices; concrete thrust blocks; greasing and wrapping all fittings; pipeline dewatering; disinfection and commissioning pipeline; adjustment of valve box lids to final grade; concrete collars; furnishing and placing of backfill and untreated base course, compaction, surface restoration, or any other appurtenant items of work for which separate payment is not otherwise specifically provided in the Bid Sheets.

AK. Furnish and Install Reducer (Material, Size per Plan) (Bid No. 38):

1. Basis for Measurement: Measured and paid for on a per each basis for the actual quantity of reducer fabricated and installed. Measurement to be by actual field count of each installed reducer.

2. Basis for Payment: Shall constitute full compensation for saw cutting, demolition, removal and disposal of old, asphalt, road base and waste materials, dewatering trench, excavation regardless of depth of waterline, furnishing and installing reducer as indicated on the plans or as directed miscellaneous pipe, fittings, gaskets , nuts bolts, and approved joint restraining devices; concrete thrust blocks; greasing and wrapping all fittings; pipeline dewatering; disinfection and commissioning pipeline; adjustment of valve box lids to final grade; concrete collars; or any other appurtenant items of work for which separate payment is not otherwise specifically provided in the Bid Sheets.

AL. Furnish and install Culinary Water Meter and Fittings (1” and 3/4”) (Bid Item No. 41):

1. Basis of Measurement: Measured and paid for by each water meter actually installed.

2. Basis of Payment: Shall constitute full compensation for saw cutting, demolition, removal and disposal of road base and waste materials, dewatering trench, excavation regardless of depth of existing waterline, new water meter and connection as indicated on plan, incidental work fittings and structures; flushing the service prior to acceptance; furnishing and placing of backfill and untreated base course, compaction, surface restoration, restoration of unimproved roadway or parking areas, landscaping, sprinkler restoration or any other appurtenant items of work for which separate payment is not otherwise specifically provided in the Bid Sheets.

AM. Construct Concrete Thrust Restraint for HDPE Pipe, Complete (Bid Schedule Item 42):

1. Basis for Measurement: By the unit of each item constructed.

2. Basis for Payment: Includes all required earthwork, to include excavating for structure, backfilling around concrete work, and compacting backfill; scarifying and compacting substrate surfaces; furnishing, placing and compacting gravel base material, as indicated; concrete work; steel reinforcement material and work; and all appurtenant work to complete the structure.

AN. Riprap (Bid Item 44):

1. Basis for Measurement: By the square foot of riprap actually placed.

2. Basis for Payment: Includes all required earthwork, including excavating, grading, backfilling, and compacting backfill; furnishing, placing and compacting gravel base, as indicated and as directed; supplying riprap material; stockpiling material as required; placing and grading riprap, as indicated and as directed; and all appurtenant work.
   a. Riprap material placed outside the limits for riprap, as indicated on the drawings, as described herein, and as directed by the Engineer, shall be at the Contractor's expense; with no additional cost to the Owner.

AO. Erosion Control Mat and Native Grass Seeding (Bid Item 45,46):

1. Basis for Measurement: By the square foot of erosion control mat and seeding actually placed.

2. Basis for Payment: Includes supplying seed; preparing seedbed; placing seed, where indicated and as directed by the Engineer; furnishing and placing erosion control mat, where indicated on the drawings and as directed by the Engineer; and all appurtenant work.
   a. Erosion control mat and seeding placed outside the limits as indicated on the drawings, as described herein, and as directed by the Engineer, shall be at the Contractor's expense; with no additional cost to the Owner.

AP. Heating, Cooling and Ventilating System (BY OTHERS):

1. Basis for Measurement: TO BE PROVIDED AND INSTALLED BY OTHERS.

2. Basis for Payment: Includes furnishing and installing unit heaters, gas piping, thermostat, controls, vents, and appurtenant items; furnishing and installing wall mounted air conditioning unit and all appurtenant items; furnishing and installing wall mounted exhaust fans, controls, and appurtenant items; and all appurtenant work.

AQ. Electrical System for Booster Pump Station (BY OTHERS):

1. Basis for Measurement: TO BE PROVIDED AND INSTALLED BY OTHERS.

2. Basis for Payment: Includes all required earthwork, to include excavating for conduits and cables, backfilling excavations, and compacting backfill; furnishing and installing electrical system, complete, including wire, conduit, wiring devices, dry-type transformer, light fixtures, outlets, switches, lighting panel, safety switches, connecting related items; installing pump controllers and all appurtenant items; and all appurtenant work.
   a. Payment shall also include picking up and delivering the materials supplied to the job site.
   b. Payment shall include constructing electrical supply, complete, including concrete transformer pad,

service line from transformer to building, current transformer, meter and meter base, safety switch, and all appurtenant work.

c. Payment shall also include installing conduit from the Rocky Mountain Power transformer to the meter cabinet on the pump station building and to a location designated by Rocky Mountain Power; wire to be installed in these conduits by Rocky Mountain Power. Payment includes all required earthwork, to include excavating for trenches for electrical power supply lines, backfilling trenches, and compacting backfill material, to the limits indicated and as directed by the Engineer..

AR. Imported General Fill (Type I) (Bid Item No. 48):

1. Basis for Measurement: By the cubic yard of General Fill (Type I) material actually placed.

   a. Computation of imported General Fill (Type I) material shall be based upon the trench square footage of material place multiplied by thickness (field measured). Alternatively weigh tickets may be used if approved by Engineer.

2. Basis for Payment: Includes supplying and stockpiling imported fill material required only when District Engineer has indicated Native material is not suitable for pipe bedding as indicated.

   a. Imported borrow material placed outside the limits for pipe bedding, as indicated on the trench detail drawings, as described herein, and as directed by the Engineer, shall be at the Contractor's expense; with no additional cost to the Owner.

AS. Imported Structural Fill (Type II) (Bid Item No. 49):

1. Basis for Measurement: By the cubic yard of Structural Fill (Type II) material actually placed.

   a. Computation of imported Structural Fill (Type II) material shall be based upon the trench square footage of material place multiplied by thickness (field measured). Alternatively weigh tickets may be used if approved by Engineer.

2. Basis for Payment: Includes supplying and stockpiling imported fill material required only when District Engineer has indicated Native material is not suitable for pipe bedding as indicated.

   a. Imported borrow material placed outside the limits for pipe bedding, as indicated on the trench detail drawings, as described herein, and as directed by the Engineer, shall be at the Contractor's expense; with no additional cost to the Owner.

AT. Imported Borrow for Pipe Bedding (Bid Item No. 50):

1. Basis for Measurement: By the cubic yard of borrow material actually placed.

   a. Computation of imported borrow material shall be based upon the trench width and depth of the pipe zone (indicated on the drawings).

2. Basis for Payment: Includes supplying and stockpiling imported fill material required only when District Engineer has indicated Native material is not suitable for pipe bedding as indicated.

a. Placement and Compaction of borrow for pipe bedding shall be paid under "FURNISH (AND/OR) INSTALL CULINARY WATER PIPE..." items; and not as part of this item.

b. Imported borrow material placed outside the limits for pipe bedding, as indicated on the trench detail drawings, as described herein, and as directed by the Engineer, shall be at the Contractor's expense; with no additional cost to the Owner.

3. Imported borrow material for pipe bedding shall not be used for trench stabilization. Where required, stabilization of trenches shall be done using a courser gravel material that is acceptable to the Engineer; and the quantity of material used shall be determined at the time of construction by a method acceptable to the Engineer.

AU. Imported Borrow for Trench Backfill (Bid Item No. 51):

1. Basis for Measurement: By the cubic yard of borrow material actually placed.

a. Computation of imported borrow material shall be based upon the average trench width, from the width at the top of the trench (up to the maximum indicated on the drawings) to the width at the top of the pipe zone (up to the maximum indicated on the drawings).

2. Basis for Payment: Includes supplying and stockpiling imported fill material required only when District Engineer has indicated Native material is not suitable for trench backfill as indicated.

a. Placement and Compaction of borrow for trench backfill shall be paid under "FURNISH (AND/OR) INSTALL CULINARY WATER PIPE..." items; and not as part of this item.

b. Imported borrow material placed outside the limits for pipe trench backfill, as indicated on the trench detail drawings, as described herein, and as directed by the Engineer, shall be at the Contractor's expense; with no additional cost to the Owner.

AV. Rock Excavation (Bid Item No. 52):

1. Basis of Measurement: By the cubic yard of rock material actually excavated.

2. Basis for Payment: Includes all required rock excavation by acceptable methods, including rock splitting, jack-hammering or other methods, as required and as directed, to remove large boulders and other difficult material from the pond area, to the limits as directed by the Engineer; loading and disposing of rock material in an acceptable manner, as directed; and all appurtenant work.

PART 2 PRODUCTS - NOT USED

PART 3 EXECUTION - NOT USED

END OF SECTION

SECTION 02150

PUMP STATION DEMOLITION

PART 1 GENERAL

1.01 SECTION INCLUDES

A. Pump station demolition; including removal and/or salvage of existing pump station elements as shown and called out on plans; metal roofing, wood framing overhang, steel stairway, exterior light, and appurtenant items; salvage or disposal of removed items; and all appurtenant work.

1.02 RELATED SECTIONS

A. Section 02315 - Excavation: Excavating for structures and appurtenant items.

1.03 MEASUREMENT AND PAYMENT

A. See Section 02100 - Measurement and Payment.

1.04 QUALITY ASSURANCE

A. Perform Work in accordance with Owner's requirements as described herein.

PART 2 PRODUCTS

2.01 GENERAL

A. Refer to other sections of these specifications and the drawings for material and equipment to be removed and salvaged.

PART 3 EXECUTION

3.01 EXAMINATION

A. Verify that existing pipe sizes, locations, and inverts are as indicated.

B. Verify that existing facilities, equipment, and other items that are to be removed are as indicated.

3.02 GENERAL

A. Perform removal and salvage work as specified herein and as indicated on the drawings and as directed.

B. Perform removal and disposal work as specified herein and as indicated on the drawings and as directed.

C. Demolish existing building elements as specified herein and as indicated on the drawings and as directed.

D. Prepare remaining surfaces to receive new materials and finishes; or finish to match adjacent surfaces if no additional work is indicated.

3.03 REMOVAL AND SALVAGE

A. Existing Steel Stairway and Appurtenances.

1. Disconnect existing steel stairway from pump station building; including all fasteners and hardware, as required.

2. Remove and dispose of the existing concrete footing/foundation, as required.

3. The removed items that are to be salvaged, as directed by the Engineer, are to be relocated for use of new construction.
   a. These items shall be carefully removed and handled to prevent damage.
   b. Store the salvaged items properly at the site of construction.
   e. The Contractor shall be responsible for storage and protection of the removed items until they are ready to be relocated for new construction.

5. Removed items that are not to be salvaged, as directed by the Engineer, shall be properly disposed of in an acceptable manner.

B. Existing Pump Station Plumbing System.

1. Protect in place the existing pump station plumbing system, completely, to include check valves, gate valves, pipe, fittings, couplings, pipe supports, pressure gauges, and all appurtenant items, as required and as directed.

C. Existing Pump Station Electrical System.

1. Disconnect existing exterior light fixture from existing pump station electrical system and from the pump station power source, as required.

2. Protect in place all remaining elements of the existing pump station electrical system, completely, to include motor control center, control panels, interior light fixtures, wire and conduit, wiring devices, switches and outlets, exhaust fan, wall louver, and all appurtenant items, as required and as directed.

3. Remove existing wall mounted exhaust fan and appurtenant items.

4. Removed electrical items that are not to be salvaged, as directed by the Engineer, shall be properly disposed of in an acceptable manner.

D. Existing Roofing.

1. Cut and remove existing metal roof as directed such that only the portion of roofing that must be removed will be disposed of, protect in place remaining metal roofing; provide clean edge transition as acceptable to Engineer and Owner; and dispose of the removed material in an acceptable manner.

2. Cut and remove existing wood framed roof overhang as directed such that only the portion of overhang that must be removed will be disposed of, protect in place remaining roof overhang; provide clean edge transition as acceptable to Engineer and Owner; and dispose of the removed material in an acceptable manner.

3. Perform all removal operations in a manner that will not damage parts of the building structure not intended to be removed or that is to be salvaged for other work on the project.
   a. If, in the opinion of the Engineer, the method of removal being used may endanger or damage parts of the building, the method will be immediately changed when notified by the Engineer

3.04 REMOVAL AND DISPOSAL

A. None

3.05 FIELD QUALITY CONTROL

A. Perform field inspection in accordance with Section 01400.

END OF SECTION

SECTION 02300

GENERAL EARTHWORK

PART 1 GENERAL

1.01 SECTION INCLUDES

A. Excavating; filling and grading for park area, and related items, as indicated on the drawings; removing and disposing of excess and unsuitable material; and compacting as required.

B. Removing topsoil material; and stockpiling material on-site.

C. Backfilling, compacting and grading around and adjacent to new concrete work and paving, as indicated on the drawings.

D. Finish grading.

E. Dust control.

1.02 RELATED SECTIONS

A. Section 02315 - Structural Excavation: Building and foundation excavating.

B. Section 02316 - Fill and Backfill: Backfilling for project pipe lines and at structures.

1.03 SUBMITTALS

A. See Section 01300 - Administrative Requirements, for submittal procedures.

B. Samples, where required by the Engineer: 10-pound sample of each type of fill; submit to testing laboratory as directed by the laboratory.

C. Materials Sources: Submit name of imported materials source.

D. Fill Composition Test Reports: Results of laboratory tests on proposed and actual materials used.

E. Compaction Density Test Reports.

F. Project Record Documents: Accurately record actual locations of utilities remaining by horizontal dimensions, elevations or inverts, and slope gradients.

1.04 QUALITY ASSURANCE

A. Perform work in accordance with District Technical Specifications and Drawings.

1. Maintain one copy of standards on job site.

1.05 PROJECT CONDITIONS

A. Protect above- and below-grade utilities that remain.

B. Protect landscaping, such as plants, lawns, and other features, adjacent to work areas, from excavating equipment and vehicular traffic.

C. Protect bench marks, survey control points, existing structures, fences, sidewalks, paving, and curbs from excavating equipment and vehicular traffic.

PART 2 PRODUCTS

2.01 FILL MATERIALS

A. See Section 02316 - Fill and Backfill.

PART 3 EXECUTION

3.01 PREPARATION

A. Identify required lines, levels, contours, and datum locations.

B. Locate, identify, and protect utilities that remain and protect from damage.

C. Notify utility company to remove and relocate utilities, where and as required.

D. Verify that survey bench mark and intended elevations for the Work are as indicated.

3.02 EXCAVATING

A. Excavate to lines, grades and cross-sections as indicated on the drawings.

B. Remove top 6 inches of top soil material and store the top soil material separately from other excavated material, as directed by the District Inspector.

C. Notify District Engineer of unexpected subsurface conditions and discontinue affected Work in area until notified to resume work.

D. All excavating shall be done according to OSHA Standards and other applicable regulations.

E. Excavation and grading operations shall be conducted in such a manner so as to cause minimum inconvenience to adjacent property, including dust control.

F. Surfaces of excavated areas shall be maintained reasonable smooth at all times to ensure proper drainage. If existing drainage is interrupted, provide temporary facilities to re-route and maintain drainage. Temporary drainage facilities shall be considered incidental to work involved; and shall be removed after work is completed.

G. When unsuitable material is encountered in excavated areas at subgrade elevations, excavate as required to remove unsuitable material and backfill areas with selected backfill material.

H. Remove large rocks and boulders encountered at subgrade elevations to a depth of not less than 6-inches below subgrade, and fill and compact excavation with suitable material.

I. Remove excess and unacceptable excavated material from site and dispose of in an acceptable manner.

J. See Section 02316 for backfilling and filling procedures.

K. Benching Slopes: Horizontally bench slopes greater than 1:4 to key fill material to slope for firm bearing.

L. Stability: Replace damaged or displaced subsoil to same requirements as for specified fill.

M. During construction, provide and maintain sufficient means and devices to promptly remove and properly dispose of all water entering excavations or other parts of the work.

   1. Dispose of water from work area in an acceptable manner, without damage to adjacent property.

   2. No pipe, concrete footings, foundations or floors shall be installed in water.

3. Water shall not be allowed to rise over concrete until it has set for at least 24 hours.

4. Water shall not be allowed to rise against walls and supporting beams for a period of 14 days after completion of walls and beams.

5. Any damage to pipe work or concrete work caused by water shall be repaired by the Contractor, at his expense.

O. The use of explosives will not be allowed; unless use has been specifically reviewed and accepted by the Engineer. All blasting shall be done by a reputable contractor specializing in the use of explosives, and is acceptable to the Engineer.

3.03 SOIL REMOVAL

A. Segregate excavated material at time of excavation into topsoil material, acceptable material, and unsuitable material, as determined by the District Engineer.

B. Stockpile acceptable top soil material and subsoil material to be re-used on site; remove unacceptable and excess material from site and dispose of in an acceptable manner.

C. Stockpile materials separately in areas designated on site, within 200 feet of point of excavation; pile depth not to exceed four feet and protect from erosion.

3.04 BACKFILLING AND FILLING

A. Remove all vegetation, debris, unsuitable soil materials, obstructions and deleterious materials from designated areas prior to placement of backfills or fills.

B. Where existing ground surfaces have density less than that specified for particular area, plow area to required depth, pulverize existing material, moisture-condition to optimum moisture content and compact to required percentage of maximum density.

C. Place backfill and fill material in layers of not more than 8-inches, loose depth. Moisture-control each layer to provide optimum moisture content of material; but keep moist enough at all times to provide dust control.

D. Compact each layer to required percentage of maximum density for each area classification.

E. After park area has been graded, stockpiled top soil material shall be placed over the graded areas and compacted, as directed by the District Inspector.

F. Do not place backfill or fill material on surfaces that are muddy, frozen or contain frost or ice.

G. See Section 02316 for backfilling and filling procedures.

H. Correct areas that are over-excavated.

1. Use structural fill, flush to required elevation, compacted to minimum 97 percent of maximum dry density.

3.05 COMPACTING

A. Compact backfill and fill material to provide not less than the following percentages of maximum density for each area classification:

1. Roadways: Under paving and similar construction, compact top 12-inches of subgrade and each layer of backfill or fill material to 97 percent of maximum dry density.

2. Concrete Items: Under curb and gutter, sidewalks, and other concrete items, compact top 6-inches of subgrades and each layer of backfill or fill material to 97 percent of maximum dry density.

3. Unimproved Areas: Compact each layer of backfill or fill material to 90 percent of maximum dry density.

B. Scarify sub-base areas to required depths and compact to the specified density, as directed.

C. Moisture Control. Before compaction, moisture control sub-grades or layers of backfill and fill material, as required, to achieve optimum moisture content of material.

1. For dry material, apply water uniformly to surface of material in a way that will prevent free water from appearing on surface during or after compaction operations.

2. For soil material that is too wet to allow compaction, remove and replace backfill or fill material, or scarify subgrade material and air dry, until desired moisture content is reached.

D. No compaction required for cut areas or undisturbed earth.

3.06 FINISH GRADING

A. Grade project areas uniformly to lines and grades, as indicated, including adjacent transition areas.

B. Finish surfaces shall be smooth and compact, with uniform levels or slopes between points where elevations are indicated, or between such points and existing grades, as directed.

C. Degree of finish required will be that which is normally obtainable from brader/grader operation.

D. Place topsoil over park areas that will be seeded, sodded, and planted, as directed.

1. Place topsoil to the following compacted thicknesses:
   a. Areas to be seeded with grass: 6 inches.
   b. Areas to be sodded: 4 inches.

2. Remove roots, weeds, rocks, and foreign material while spreading.

3. Fine grade topsoil to eliminate uneven areas and low spots. Maintain profiles and contour of subgrade.

4. Lightly compact placed topsoil.

3.07 TOLERANCES

A. Top Surface of Subgrade: Plus, or minus 1/10 foot from required elevations.

B. Top Surface of Finish Grade: Plus, or minus 1/2 inch from required elevations.

3.08 FIELD QUALITY CONTROL

A. See Section 01400 - Quality Requirements, for general requirements for field inspection and testing.

B. See Section 02316 for compaction density testing.

3.09 CLEAN-UP

A. Remove unused stockpiled materials, leave area in a clean and neat condition. Grade stockpile area to prevent standing surface water.

B. Leave borrow areas in a clean and neat condition. Grade surfaces to prevent standing surface water.

END OF SECTION

SECTION 02312

TRENCHING FOR PIPE WORK

PART 1 GENERAL

1.01 SECTION INCLUDES

A. Excavating, backfilling and compacting for project pipe lines.

1.02 RELATED SECTIONS

A. Section 02316 - Fill and Backfill: Backfilling for project pipe lines and at structures.

B. Section 03300 - Cast-in-Place Concrete: all concrete Work.

1.03 MEASUREMENT AND PAYMENT

A. See Section 02100 - Measurement and Payment.

1.04 REFERENCES

A. AASHTO T 99 - Moisture-Density Relations of Soils Using a 5.5-lb (2.5 kg) Rammer and a 12-in. (305 mm) Drop.

B. AASHTO T 180 - Moisture-Density Relations of Soils Using a 10-lb (4.54 kg) Rammer and an 18-in. (457 mm) Drop.

C. ASTM C 136 - Standard Test Method for Sieve Analysis of Fine and Coarse Aggregates.

D. ASTM D 698 - Test Method for Laboratory Compaction Characteristics of Soil Using Standard Effort (12,400 ft-lbf/ft3 (600 kN-m/m3)).

E. ASTM D 1556 - Standard Test Method for Density and Unit Weight of Soil in Place by the Sand-Cone Method.

F. ASTM D 1557 - Test Method for Laboratory Compaction Characteristics of Soil Using Modified Effort (56,000 ft-lbf/ft3 (2,700 kN m/m3)).

G. ASTM D 2167 - Standard Test Method for Density and Unit Weight of Soil in Place by the Rubber Balloon Method.

H. ASTM D 2487 - Standard Classification of Soils for Engineering Purposes (Unified Soil Classification System).

I. ASTM D 2922 - Standard Test Methods for Density of Soil and Soil-Aggregate in Place by Nuclear Methods (Shallow Depth).

J. ASTM D 3017 - Standard Test Method for Water Content of Soil and Rock in Place by Nuclear Methods (Shallow Depth).

K. ASTM D 4318 - Standard Test Method for Liquid Limit, Plastic Limit, and Plasticity Index of Soils.

L. Specification for Excavating on State Highways.

M. General Safety Orders Covering Utah Industries - Section 69, Trenches.

N. United States Department of Labor OSHA Publication 2085 - "Employer - Employee, Safe Practice for Excavation and Trenching Operations".

O. Utah Occupational Safety and Health Rules and Regulations - General Standard (UOSHA).

P. Use the latest issue of the reference standards as of the date of the Project.

1.05 DEFINITIONS

A. Pipe Line Grades and Elevations: Indicated on drawings.

B. Trench Cross Sections: Indicated on standard trench detail drawings.

C. Subgrade Elevations: Bottom of road base in paved areas, as indicated on drawings.

D. Finish Grade Elevations: Top of pavement in paved areas, as indicated on drawings.

E. Ground Elevations: Indicated on the drawings.

1.06 SUBMITTALS

A. See Section 01300 - Administrative Requirements, for submittal procedures.

B. Samples, where required by the Engineer: 10-pound sample of each type of fill material; submit to testing laboratory as directed by the laboratory.

C. Materials Sources: Submit name of imported materials source.

D. Fill Composition Test Reports: Results of laboratory tests on proposed and actual materials used.

E. Compaction Density Test Reports.

1.07 PROJECT CONDITIONS

A. Provide sufficient quantities of fill to meet project schedule and requirements. When necessary, store materials on site in advance of need.

B. When fill materials need to be stored on site, locate stockpiles where designated, as acceptable to the Engineer.

1. Separate differing materials with dividers or stockpile separately to prevent intermixing.

2. Prevent contamination.

3. Protect stockpiles from erosion and deterioration of materials.

C. Verify that survey bench marks and intended elevations for the Work are as indicated.

D. Verify locations of existing utility lines in the Work area. Protect all utility lines from excavating equipment and vehicular traffic.

E. Protect plants and other features to remain.

F. Protect bench marks, survey control points, existing structures, fences, and other improvements from excavating equipment and vehicular traffic.

PART 2 PRODUCTS

2.01 FILL MATERIALS

A. See Section 02316 - Fill and Backfill.

2.02 SOURCE QUALITY CONTROL

A. See Section 01400 - Quality Requirements, for general requirements for testing and analysis of soil material.

B. Where fill materials are specified by reference to a specific standard, testing of samples for compliance will be provided before delivery to site.

C. If tests indicate materials do not meet specified requirements, change material and retest.

D. Provide materials of each type from same source throughout the Work.

PART 3 EXECUTION

3.01 EXAMINATION

A. Identify required lines, levels, contours, and datum locations.

B. Locate, identify, and protect utilities that remain and protect from damage.

C. Notify utility company to remove and relocate utilities, where and as required.

3.02 TRENCHING

A. Excavate trenches as required to allow project pipe to be installed to line and grade as indicated on the drawings.

B. Notify Engineer of unexpected subsurface conditions and discontinue affected Work in area until notified to resume work.

C. All trenching shall be done according to OSHA Standards and other applicable regulations.

D. Do not interfere with 45 degree bearing splay of adjacent foundations.

E. Excavate trenches to width, depth and cross section as indicated on the trench detail drawings.

F. Hand trim excavations. Remove loose matter.

G. Remove large stones and other hard material which could damage piping or impede consistent backfilling or compaction.

H. In unimproved areas, remove the top 6 inches of top soil material and store the top soil material separately from other excavated material, as directed by the Engineer.

I. Remove excavated material that is unsuitable for re-use on the project from site and dispose of in an acceptable manner.

J. Stockpile excavated material to be re-used in area designated on site (See Paragraph 1.07, Project Conditions, herein).

K. Remove excess excavated material from site and dispose of in an acceptable manner.

L. Excavation beyond or below lines and grades indicated shall be refilled with fill material and compacted, at the Contractor's expense.

M. During construction, provide and maintain sufficient means and devices to promptly remove and properly dispose of all water entering excavations or other parts of the work.

1. Dispose of water from work area in an acceptable manner, without damage to adjacent property.

2. No pipe, concrete footings, foundations or floors shall be installed in water.

3. Water shall not be allowed to rise over concrete until it has set for at least 24 hours.

4. Water shall not be allowed to rise against walls and supporting beams for a period of 14 days after completion of walls and beams.

5. Any damage to pipe work or concrete work caused by water shall be repaired by the Contractor, at his expense.

6. The Contractor is responsible for designing and installing dewatering systems as required to allow construction of the project; and for removing the system after the project is completed.

N. The use of explosives will not be allowed; unless use has been specifically reviewed and accepted by the Engineer. All blasting shall be done by a reputable contractor specializing in the use of explosives, and is acceptable to the Engineer.

O. Contractor shall provide excavation and safety equipment for test holes used in quality assurance testing, as directed by the District Inspector; at no additional cost to the Owner.

P. Silt fences shall be installed along the low edge of work areas and at other locations, as directed by the Engineer, and as required for erosion control.

3.03 PREPARATION FOR PIPE LINE PLACEMENT

A. Cut out soft areas of subgrade not capable of compaction in place. Backfill with bedding material, Fill Type III, or stabilization material, Fill Type V, or other acceptable material, as directed by the Engineer.

B. Compact subgrade to density equal to or greater than requirements for subsequent fill material.

C. Until ready to backfill, maintain excavations and prevent loose soil from falling into excavation.

3.04 BACKFILLING

A. Backfilling shall conform to the requirements of Section 02316 - Fill and Backfill.

B. Backfill pipe zone with bedding material, Fill Type III, or other acceptable material.

C. Backfill above pipe zone, up to subgrade or finish grade elevations with structural fill material, Fill Type II or Fill Type VIII, or other acceptable material, as indicated on trench detail drawings and as directed by the District Inspector.

D. Employ a placement method that does not disturb or damage project pipe or other work.

E. Do not backfill with wet or frozen materials.

F. Maintain optimum moisture content of fill materials to attain required compaction density.

G. Granular Fill: Place and compact materials in equal continuous layers not exceeding 6 inches compacted depth.

H. After the lower portion of trench is backfilled and compacted in landscaped areas, stockpiled top soil material shall be placed in the upper portion of trenches and compacted, as directed by the Engineer.

I. Soil Fill: Place and compact material in equal continuous layers not exceeding 12 inches compacted depth.

J. Where directed by the District Inspector, backfill material may be consolidated by an acceptable method.

K. Correct areas that are over-excavated.

1. Use structural fill, flush to required elevation, compacted to at least 95 percent of maximum dry density as determined by the modified Proctor method (ASTM D-1557).

L. Compaction Density for Backfill Within Pipe Zone: to at least 90 percent of maximum dry density as determined by the modified Proctor method (ASTM D-1557); unless otherwise specified or indicated.

M. Compaction Density for Backfill Above Pipe Zone, unless otherwise specified or indicated:

1. Under paved areas and similar construction: to at least 95 percent of maximum dry density as determined by the modified Proctor method (ASTM D-1557).

2. Within street rights-of-way: to at least 95 percent of maximum dry density as determined by the modified Proctor method (ASTM D-1557).

3. At other locations: to at least 85 percent of maximum dry density as determined by the modified Proctor method (ASTM D-1557);

N. Reshape and re-compact fills subjected to vehicular traffic.

3.05 BEDDING AND FILL AT SPECIFIC LOCATIONS

A. Project Pipe Lines:

1. Pipe Bedding: Use granular fill, Fill Type III.

2. Backfill trench to subgrade or finish elevations with structural fill, Fill Type II, or Fill Type VIII, if recommended by the geotechnical engineer of record and accepted by the District Inspector.

3. Compact bedding material in maximum 6-inch lifts to at least 90 percent of maximum dry density as determined by the modified Proctor method (ASTM D-1557);

4. Compact backfill material in maximum 12-inch lifts to at least 95 percent of maximum dry density as determined by the modified Proctor method (ASTM D-1557);

3.06 TOLERANCES

A. Top Surface of Backfilling in unimproved areas: Plus, or minus 1 inch from required elevations.

B. Top Surface of Backfilling in improved areas: Plus, or minus 1/2 inch from required elevations

3.07 FIELD QUALITY CONTROL

A. See Section 01400 - Quality Requirements, for general requirements for field inspection and testing.

B. Testing is to be done as indicated in the Supplemental General Conditions; test results will be sent to the Engineer within 24 hours after the tests are completed.

C. Perform compaction density testing on compacted fill in accordance with ASTM D1556, ASTM D2167, ASTM D2922, or ASTM D3017.

D. Evaluate results in relation to compaction curve determined by testing uncompacted material in accordance with ASTM D 698 ("standard Proctor"), ASTM D 1557 ("modified Proctor"), or AASHTO T 180.

E. If tests indicate work does not meet specified requirements, remove work, replace and retest.

F. Frequency of Tests: one test for each 200 cubic yards of material, or as directed by the Engineer.

3.08 CLEAN-UP

A. Remove unused stockpiled materials, leave area in a clean and neat condition. Grade stockpile area to prevent standing surface water.

B. Leave borrow areas in a clean and neat condition. Grade to prevent standing surface water.

END OF SECTION

SECTION 02315

STRUCTURAL EXCAVATION

PART 1 GENERAL

1.01 SECTION INCLUDES

A. Excavating for structure volume below grade, footings, slabs-on-grade, walks, and other concrete work.

1.02 RELATED SECTIONS

A. Section 02312 - Trenching for Pipe Work: Excavating, backfilling and compacting for project pipe lines.

B. Section 02316 - Fill and Backfill: Fill materials, filling, and compacting.

1.03 REFERENCES

A. See Section 02312 - Trenching for Pipe Work for list of references.

1.04 MEASUREMENT AND PAYMENT

A. See Section 02100 - Measurement and Payment.

1.05 PROJECT CONDITIONS

A. Verify that survey bench mark and intended elevations for the Work are as indicated.

B. Protect bench marks, survey control points, existing structures, fences, sidewalks, paving, and curbs from excavating equipment and vehicular traffic.

PART 2 PRODUCTS - NOT USED

PART 3 EXECUTION

3.01 PREPARATION

A. Identify required lines, levels, contours, and datum locations.

B. Locate, identify, and protect utilities that remain and protect from damage.

3.02 EXCAVATING

A. Excavate to accommodate new structures and construction operations to lines and elevations indicated.

B. Notify Engineer of unexpected subsurface conditions and discontinue affected Work in area until notified to resume work.

C. All excavating shall be done according the OSHA Standards and other applicable safety regulations.

D. Do not interfere with 45 degree bearing splay of foundations.

E. Cut excavations wide enough to allow construction of structures as indicated; bottom dimensions shall be sufficient to provide at least 12 inches clear between extreme outside of concrete work and side of excavation. No tunneling or under cutting will be permitted.

F. Hand trim excavations. Remove loose matter.

G. Correct areas that are over-excavated and load-bearing surfaces that are disturbed; see Section 02316.

H. Grade top perimeter of excavation to prevent surface water from draining into excavation.

I. Remove excavated material that is unsuitable for re-use from site and dispose of in an acceptable manner.

J. Stockpile excavated material to be re-used in areas designated on site.

K. Remove excess excavated material from site and dispose of in an acceptable manner.

3.03 BACKFILLING

A. Backfilling shall conform to the requirements of Section 02316 - Fill and Backfill.

B. Backfill under structures with structural backfill material, Fill Type II, or other acceptable material, and compact to 95 percent of maximum density.

C. Backfill around structures with structural backfill material, Fill Type II, or other acceptable material, up to subgrade or finish grade elevations, as indicated, and compact to at least 95 percent of maximum dry density as determined by the modified Proctor method (ASTM D-1557);

D. Employ placement method that will not disturb or damage structure.

E. Backfill shall be brought up uniformly around structures, so as to eliminate any possibility of unbalanced loading on structure which could damage or movement.

F. No backfill shall be placed against new concrete work until concrete has been accepted by the District Inspector; and backfill operation has been authorized.

G. Granular Fill: Place and compact materials in equal continuous layers not exceeding 6 inches compacted.

H. Structural Backfill: Place and compact materials uniformly around structures in equal continuous layers not exceeding 12 inches compacted.

I. Correct areas that are over-excavated with structural backfill material, compacted to at least 95 percent of maximum dry density as determined by the modified Proctor method (ASTM D-1557); at the Contractor's expense.

3.04 FIELD QUALITY CONTROL

A. See Section 01400 - Quality Requirements, for general requirements for field inspection and testing.

B. Provide for visual inspection of load-bearing excavated surfaces before placement of foundations.

C. Testing is to be done as indicated in Supplemental General Conditions; test results will be sent to the Engineer within 24 hours after the tests are completed.

D. Perform compaction density testing on compacted backfill in accordance with ASTM D1556, ASTM D2167, ASTM D2922, or ASTM D3017.

3.05 PROTECTION

A. Prevent displacement of banks and keep loose soil from falling into excavation; maintain soil stability.

B. Protect bottom of excavations and soil adjacent to and beneath foundation from freezing.

3.06 CLEAN-UP

A. Remove unused stockpiled materials, leave area in a clean and neat condition. Grade stockpile area to prevent standing surface water.

END OF SECTION

SECTION 02316

FILL AND BACKFILL

PART 1 GENERAL

1.01 SECTION INCLUDES

A. Backfilling and compacting for project pipe lines.

B. Filling, backfilling, and compacting for miscellaneous structures.

1.02 RELATED SECTIONS

A. Section 02312 - Trenching for Pipe Work: Excavating for project pipe lines.

B. Section 02315 - Structural Excavation: Excavating for structures.

1.03 MEASUREMENT AND PAYMENT

A. See Section 02100 - Measurement and Payment.

B. Field measurements, of trenches and other excavations, and weigh tickets will be used as a check of measurement for materials furnished, but will not be individually considered as evidence of placement.

1. A factor based on the density of material used will be used for converting from tons to cubic yards measurements when tickets are used for checking quantities furnished. Allowance for waste will be considered in such conversions.

1.04 REFERENCES

A. AASHTO T 99 - Moisture-Density Relations of Soils Using a 5.5-lb (2.5 kg) Rammer and a 12-in. (305 mm) Drop.

B. AASHTO T 180 - Standard Method of Test for Moisture-Density Relations of Soils Using a 10-lb (4.54 kg) Rammer and an 18-in. (457 mm) Drop; American Association of State Highway and Transportation Officials.

C. ASTM C 136 - Standard Test Method for Sieve Analysis of Fine and Coarse Aggregates.

D. ASTM D 698 - Test Method for Laboratory Compaction Characteristics of Soil Using Standard Effort (12,400 ft-lbf/ft3 (600 kN-m/m3)).

E. ASTM D 1556 - Standard Test Method for Density and Unit Weight of Soil in Place by the Sand-Cone Method.

F. ASTM D 1557 - Test Method for Laboratory Compaction Characteristics of Soil Using Modified Effort (56,000 ft-lbf/ft3 (2,700 kN m/m3)).

G. ASTM D 2167 - Standard Test Method for Density and Unit Weight of Soil in Place by the Rubber Balloon Method.

H. ASTM D 2321 - Standard Practice for Underground Installation of Thermoplastic Pipe for Sewers and Other Gravity-Flow Applications.

I. ASTM D 2487 - Standard Classification of Soils for Engineering Purposes (Unified Soil Classification System).

J. ASTM D 2922 - Standard Test Methods for Density of Soil and Soil-Aggregate in Place by Nuclear Methods (Shallow Depth).

K. ASTM D 3017 - Standard Test Method for Water Content of Soil and Rock in Place by Nuclear Methods (Shallow Depth).

L. ASTM D 4318 - Standard Test Method for Liquid Limit, Plastic Limit, and Plasticity Index of Soils.

M. Use the latest edition of the above reference standards as of the date of the Project.

1.05 DEFINITIONS

A. Finish Grade Elevations: Indicated on drawings.

B. Subgrade Elevations: Indicated on drawings.

C. Pipe Invert Elevations: Indicated on drawings.

1.06 SUBMITTALS

A. See Section 01300 - Administrative Requirements, for submittal procedures.

B. Samples: 10-pound sample of each type of fill; submit in air-tight containers to testing laboratory, if requested by the Engineer.

C. Materials Sources: Submit name of imported materials source.

D. Fill Composition Test Reports: Results of laboratory tests on proposed and actual materials used, if requested by the Engineer.

E. Compaction Density Test Reports.

1.07 PROJECT CONDITIONS

A. Provide sufficient quantities of fill to meet project schedule and requirements. When necessary, store materials on site in advance of need.

B. When fill materials need to be stored on site, locate stockpiles where designated.

1. Separate differing materials with dividers or stockpile separately to prevent intermixing.

2. Prevent contamination.

3. Protect stockpiles from erosion and deterioration of materials.

C. Verify that survey bench marks and intended elevations for the Work are as indicated.

PART 2 PRODUCTS

2.01 FILL MATERIALS

A. General Fill - Fill Type I: Imported borrow or soil excavated on-site if acceptable to the Engineer; conforming to Type A-1-a of AASHTO Classification of Soils and Soil-Aggregate Mixtures.

1. Graded.

2. Free of lumps larger than 3 inches, rocks larger than 2 inches, and debris.

3. Conforming to ASTM D 2487 Group Symbol CL; liquid limit less than 50.

4. Not more than 15 percent passing No. 200 sieve.

B. Structural Fill - Fill Type II: Imported borrow or soil excavated on-site if acceptable to the Engineer; conforming to Type A-1 or A-2 of AASHTO Classification of Soils and Soil-Aggregate Mixtures.

1. Graded.

2. Free of lumps larger than 3 inches, rocks larger than 2 inches, deleterious matter and debris.

3. Conforming to ASTM D 2487 Group Symbol GW, GP, SW and SP.

4. Not more than 15% passing No. 200 sieve.

C. Concrete for Fill: Lean concrete.

1. Conforming to Flowable Fill, Section 845 of the Utah Department of Transportation's Standard Specifications.

D. Granular Fill - Gravel - Fill Type III: Angular crushed washed stone; free of shale, clay, friable material and debris.

1. Graded in accordance with ASTM C 136, within the following limits:
   a. 2-inch sieve: 100 percent passing.
   b. 1 inch sieve: 95 percent passing.
   c. 3/4-inch sieve: 95 to 100 percent passing.
   d. 5/8-inch sieve: 75 to 100 percent passing.
   e. 3/8-inch sieve: 55 to 85 percent passing.
   f. No. 4 sieve: 35 to 60 percent passing.
   g. No. 16 sieve: 15 to 35 percent passing.
   h. No. 40: 10 to 25 percent passing.
   i. No. 200: 5 to 10 percent passing.

E. Granular Fill - Course Gravel - Fill Type IV: Free draining granular backfill material; natural or crushed aggregate.

1. Graded in accordance with ASTM C-136, within the following limits:
   a. 2-inch sieve: 100 percent passing.
   b. 1 inch sieve: 95 to 100 percent passing.
   c. 1/2-inch sieve: 25 to 60 percent passing.
   d. No. 4 sieve: 0 to 10 percent passing.

F. Granular Fill - 3/4-inch Gravel - Fill Type V: Angular crushed washed stone; free of shale, clay, friable material and debris.

1. Graded in accordance with ASTM C-136, within the following limits:
   a. 1 inch sieve: 100 percent passing.
   b. 3/4-inch sieve: 90 to 100 percent passing.
   c. 3/8-inch sieve: 20 to 55 percent passing.
   d. No. 4 sieve: 0 to 10 percent passing.
   d. No. 8 sieve: 0 to 5 percent passing.

G. Sand - Fill Type VI: Natural river or bank sand; washed; free of silt, clay, loam, friable or soluble materials, and organic matter.

1. Graded in accordance with ASTM C 136; within the following limits:
   a. No. 4 sieve: 100 percent passing.
   b. No. 14 sieve: 10 to 100 percent passing.
   c. No. 50 sieve: 5 to 90 percent passing.
   d. No. 100 sieve: 4 to 30 percent passing.
   e. No. 200 sieve: 0 to 5 percent passing.

H. Topsoil - Fill Type VII: Topsoil excavated on-site.

1. Graded.

2. Free of roots, rocks larger than 1/2-inch, subsoil, debris, large weeds and foreign matter.

3. Acidity range (pH) of 5.5 to 7.5.

4. Containing a minimum of 4 percent and a maximum of 25 percent inorganic matter.

5. Conforming to ASTM D2487 Group Symbol OH.

I. On-Site Soil - Fill Type VIII: Material excavated during trenching operations; free of organic matter and debris.

1. On-site soil may only be used as trench backfill if recommended by the geotechnical engineer of record; and the material is acceptable to the District Inspector or District Engineer.

2. The District shall employ and pay for quality control services of the geotechnical engineer of record to determine if the on-site material can be used as backfill material.

3. The geotechnical engineer of record shall define placement and compaction requirements for on-site material.

4. The geotechnical engineer of record shall prepare a letter or report summarizing:
   a. Testing methods, test frequencies and observations.
   b. Any non-conforming conditions and corrective actions taken to remedy the non-conformities.
   c. Compliance of the work to the project specifications.

2.02 SOURCE QUALITY CONTROL

A. See Section 01400 - Quality Requirements, for general requirements for testing and analysis of soil material.

B. Where fill materials are specified by reference to a specific standard, testing of samples for compliance will be provided before delivery to site.

C. If tests indicate materials do not meet specified requirements, change material and retest.

D. Provide materials of each type from same source throughout the Work.

PART 3 EXECUTION

3.01 EXAMINATION

A. Identify required lines, levels, contours, and datum locations.

B. Verify structural ability of unsupported walls to support imposed loads by the fill.

3.02 PREPARATION

A. Scarify subgrade surface to a depth of 6 inches to identify soft spots.

B. Cut out soft areas of subgrade not capable of compaction in place. Backfill with Fill Type II or III.

C. Compact subgrade to density equal to or greater than requirements for subsequent fill material.

D. Until ready to fill, maintain excavations and prevent loose soil from falling into excavation.

3.03 FILLING

A. Fill to finish contours and elevations indicated using unfrozen materials.

B. Fill up to subgrade elevations where indicated.

C. Employ a placement method that does not disturb or damage other work.

D. Do not fill over porous, wet, frozen or spongy subgrade surfaces.

E. Maintain optimum moisture content of fill materials to attain required compaction density.

F. Granular Fill: Place and compact materials in equal continuous layers not exceeding 6 inches compacted depth.

G. Soil Fill: Place and compact material in equal continuous layers not exceeding 12 inches compacted depth.

H. Slope grade away from building minimum 2 inches in 10 feet, unless noted otherwise. Make gradual grade changes. Blend project slopes into existing areas.

I. Correct areas that are over-excavated.

1. Load-bearing foundation surfaces: Use structural fill, Fill Type II, flush to required elevation, compacted to at least 95 percent of maximum dry density as determined by the modified Proctor method (ASTM D-1557);

2. Other areas: Use general fill, Fill Type I or Fill Type VIII, flush to required elevation, compacted to at least 95 percent of maximum dry density as determined by the modified Proctor method (ASTM D-1557);

J. Compaction Density Unless Otherwise Specified or Indicated:

1. Under paving, slabs-on-grade, and similar construction: to at least 95 percent of maximum dry density as determined by the modified Proctor method (ASTM D-1557);

2. Under structures: to at least 95 percent of maximum dry density as determined by the modified Proctor method (ASTM D-1557);

3. At other locations: to at least 90 percent of maximum dry density as determined by the modified Proctor method (ASTM D-1557);

K. Consolidation density shall be 85 percent of maximum dry density.

L. Reshape and re-compact fills subjected to vehicular traffic.

3.04 FILL AT SPECIFIC LOCATIONS

A. Fill Within Pipe Zone, along Pipe Lines:

1. Use granular fill, Fill Type III, or other acceptable material.

2. Fill under, around and to one foot over PVC sewer pipe; and under, around and to the top of concrete sewer pipe; as indicated on the trench detail drawing.

3. Maximum depth per lift: 6 inches compacted.

4. Compact to at least 90 percent of maximum dry density as determined by the modified Proctor method (ASTM D-1557).

B. Fill Above Pipe Zone, along Pipe Lines, in Improved Areas:

1. Use granular fill, Fill Type II, Fill Type VIII, or other acceptable material.

2. Fill from top of pipe zone to subgrade elevations or finish grade; as indicated on the trench detail drawing or as required and as directed.

3. Maximum depth per lift: 12 inches compacted.

4. Compact to at least 95 percent of maximum dry density as determined by the modified Proctor method (ASTM D-1557).

C. Fill Above Pipe Zone, along Pipe Lines, in Unimproved Areas:

1. Use general fill, Fill Type I, or Fill Type VIII, unless otherwise specified or indicated.

2. Fill to finish grade elevations.

3. Maximum depth per lift: 12 inches, compacted.

4. Compact to at least 85 percent of maximum dry density as determined by the modified Proctor method (ASTM D-1557).

D. Structural Fill at structures and embankments:

1. Use structural fill, Fill Type II.

2. Fill up to subgrade elevations.

3. Maximum depth per lift: 12 inches, compacted.

4. Compact to at least 95 percent of maximum dry density as determined by the modified Proctor method (ASTM D-1557).

E. At Foundation Walls and Footings:

1. Use structural fill, Fill Type II.

2. Fill up to finish grade elevation.

3. Compact each lift to at least 95 percent of maximum dry density as determined by the modified Proctor method (ASTM D-1557).

4. Do not backfill against unsupported foundation walls.

5. Backfill simultaneously on each side of unsupported foundation walls until supports are in place.

F. Under concrete walks, slabs-on-grade, and other concrete work:

1. Use granular fill, Fill Type II or Fill Type III.

2. Depth: 6 inches deep, or as indicated on the drawings.

3. Compact to at least 95 percent of maximum dry density.

3.05 TOLERANCES

A. Top Surface of General Filling: Plus, or minus 1 inch from required elevations.

B. Top Surface of Filling Under Paved Areas: Plus, or minus 1/2 inch from required elevations.

3.06 FIELD QUALITY CONTROL

A. See Section 01400 - Quality Requirements, for general requirements for field inspection and testing.

B. Testing is to be done by an independent testing company for the Owner or Contractor, as indicated in the Supplemental General Conditions; test results for all tests will be sent to the Engineer within 24 hours after the tests have been completed.

C. Perform compaction density testing on compacted fill in accordance with ASTM D1556, ASTM D2167, ASTM D2922, or ASTM D3017.

D. Evaluate results in relation to compaction curve determined by testing uncompacted material in accordance with ASTM D 698 ("standard Proctor"), ASTM D 1557 ("modified Proctor"), or AASHTO T 180.

E. If tests indicate work does not meet specified requirements, remove work, replace and retest.

F. Frequency of Tests: as directed by the District Inspector or Engineer.

G. The District Inspector shall have the right to determine when and where all soil testing shall be preformed.

H. Contractor shall provide excavation and safety equipment, as required, for test holes used in quality assurance testing, as directed by the District Inspector; at no additional cost to the District.

I. The District will provide quality assurance testing as follows:

1 The District's testing company will conduct tests in areas of the work which have been completed. The frequency of testing will be determined by the District Inspector dependent upon the size of project; but there will be a minimum of three tests conducted on each project.

2. The quality assurance testing procedure will include:
   a. Review the density test results recorded by the independent testing agency at time of construction to verify frequency of tests; verify that compaction in accepted work areas meets the project specifications; and verify that corrective actions were taken, where required, and recorded.
   b. Conduct in-place density tests, following procedures established by the project specifications.
      (1) Acceptance of the backfill will be based on density determinations made at the three or more test locations, as determined by the District Inspector.
      (2) The location of the test sites will be chosen based on areas completed by the contractor and based on the judgment of the District Inspector.
      (3) Approval of work will be dependent on tests indicating a density meeting the project specifications.
      (4) At each test location, a sample of the soil tested will be taken to the testing laboratory for the moisture/density relationship testing.
      (5) The Contractor will assist the District's testing company by performing the excavations necessary to make the required tests and providing required safety equipment, as directed by the District Inspector.

3. If a work area does not meet the compaction criteria indicated in the specifications, the District will be immediately notified of the test results. At that time, the District will have the opportunity of re-testing the area that is not within compliance or report the non-compliance to the Contractor.

4. Once the Contractor has completed corrective actions in the area of non-compliant work, two additional tests will be conducted to verify that the corrective action has resulted in acceptable work.

3.07 CLEAN-UP

A. Remove unused stockpiled materials, leave area in a clean and neat condition. Grade stockpile area to prevent standing surface water.

B. Leave borrow areas in a clean and neat condition. Grade to prevent standing surface water.

END OF SECTION

SECTION 02373

RIPRAP

PART 1 GENERAL

1.01 SECTION INCLUDES

A. Riprap.

1.02 RELATED SECTIONS

A. Section 02316 - Fill and Backfill: Aggregate requirements.

1.03 MEASUREMENT AND PAYMENT

A. See Section 02100 - Measurement and Payment.

1.04 QUALITY ASSURANCE

A. Perform Work in accordance with Utah Department of Transportation standard.

PART 2 PRODUCTS

2.01 MATERIALS

A. Riprap: Granite type; broken stone; solid and non-friable; 24-inch with gradation D50 as indicated.

B. Aggregate: Granular fill as specified in Section 02316.

PART 3 EXECUTION

3.01 RIPRAP AT END OF CULVERT

A. Fine grade slopes and bottom of outlet channel as required to shape sub-base for riprap as indicated and as directed; compact sub-base to required densities.

B. Place and compact gravel base for the riprap, 6-inches thick, as directed.

C. Place riprap, at end of end of culvert, in the bottom and on the slopes of the new outlet channel, as indicated and as directed. The installed thickness of the riprap to be 42-inch minimum, as directed.

END OF SECTION

SECTION 02510

WATER DISTRIBUTION SYSTEM

PART 1 GENERAL

1.01 SECTION INCLUDES

A. Pipe and fittings for project water lines.

B. Butterfly Valves and appurtenant items.

C. Connecting project pipe lines to existing pipe lines.

1.02 RELATED SECTIONS

A. Section 02312 - Trenching for Pipe Work: Excavating, bedding, backfilling and compacting.

B. Section 02315 - Excavation: Excavating for structures and appurtenant items.

C. Section 02316 - Fill and Backfill: Bedding and backfilling.

D. Section 02515 - Disinfection of Water Distribution Systems: Disinfection of culinary water piping.

E. Section 03300 - Cast-in-Place Concrete: Concrete for thrust restraints.

1.03 REFERENCES

A. ASTM D 2774 - Standard Recommended Practice for Underground Installation of Thermoplastic Pressure Piping.

B. ASTM D 3139 - Standard Specification for Joints for Plastic Pressure Pipes using Flexible Elastomeric Seals.

C. AWWA C 104/A21.4 - Cement-Mortar Lining for Ductile Iron Pipe and Fittings for Water; America Water Works Association (AWWA/ANSI C104/A21.4).

D. AWWA C 105/A21.5 - Polyethylene Encasement for Ductile Iron Pipe Systems; America Water Works Association (AWWA/ANSI C105/A21.5).

E. AWWA C 111/A21.11 - Rubber-Gasket Joints for Ductile Iron Pressure Pipe and Fittings; America Water Works Association (AWWA/ANSI C111/A21.11).

F. AWWA C 151/A21.51 - Ductile Iron Pipe, Centrifugally Cast, for Water; America Water Works Association; (AWWA/ANSI C151/A21.51).

G. AWWA C 200 - Standard Specification for Welded Steel Pipe.

H. AWWA C 500 - Metal-Seated Gate Valves for Water Supply Service; American Water Works Association.

I. AWWA C 502 - Dry Barrel Fire Hydrants; America Water Works Association (AWWA/ANSI C502).

J. AWWA C 504 - Rubber Seated Butterfly Valves; America Water Works Association.

K. AWWA C 509 - Resilient-Seated Gate Valves for Water Supply Service; American Water Works Association.

L. AWWA C 600 - Installation of Ductile Iron Water Mains and Their Appurtenances: American Water Works Association (AWWA/ANSI C600).

M. AWWA C 900 - Polyvinyl Chloride (PVC) Pressure Pipe, 4 inch Through 12-inch, for Water Distribution; American Water Works Association.

N. Use the latest edition of the above reference standards as of the date of the project.

1.04 SUBMITTALS

A. See Section 01300 - Administrative Requirements, for submittal procedures.

B. Product Data: Provide data on pipe materials, pipe fittings, valves and accessories.

C. Manufacturer's Certificate: Certify that products meet or exceed specified requirements.

D. Project Record Documents: Record actual locations of pipe lines, valves, connections, thrust restraints, and invert elevations. Identify and describe unexpected variations to subsoil conditions or discovery of uncharted utilities.

1.05 QUALITY ASSURANCE

A. Perform Work in accordance with Owner's requirements as described herein.

1.06 DELIVERY, STORAGE, AND HANDLING

A. Deliver and store valves in shipping containers with labeling in place.

PART 2 PRODUCTS

2.01 WATER PIPE

A. Ductile Iron Pipe: AWWA C 151, as indicated:

1. Fittings: Ductile iron, standard thickness.

2. Joints:
   a. Push-On Joints: AWWA C 111, push-on type with rubber gasket.
   b. Mechanical Joints: AWWA C 111, mechanical joint type with gasket, bolts and nuts
   c. Flanged Joints: AWWA C 110, flanged type with gasket, bolts and nuts

3. Jacket: AWWA C105 polyethylene jacket.

B. PVC Pressure Pipe: AWWA C 900, Class 150 or 200, as indicated.

1. Fittings: AWWA C 111, ductile iron, standard thickness.

2. Joints: ASTM D 3139, compression gasket ring.

3. Tracer Wire: Magnetic detectable conductor, clear plastic covering; imprinted with “Water Line” in large letters, for PVC pipe.

C. HDPE Pressure Pipe: AWWA C 906, DR 17 or DR 9, as indicated.

1. Fittings: Equivalent to specified HDPE Pressure Pipe

2. Joints: Mueller compression type couplings.

3. Tracer Wire: Magnetic detectable conductor, clear plastic covering; imprinted with “Water Line” in large letters, for HDPE pipe.

2.02 VALVES

A. Valves: Manufacturer's name and pressure rating marked on valve body.

B. Gate Valves Up To 3 Inches:

1. Brass or Bronze body, non-rising stem, inside screw, single wedge or disc, IPS ends, and handwheel.

2. Product: Powell U.S. Bronze Gate Valves, or accepted equal.

3. Substitutions: See Section 01600 - Product Requirements.

C. Gate Valves 3 Inches and Over:

1. AWWA C 509, iron body, bronze trim, non-rising stem with square nut, single wedge, resilient seat, mechanical joint or flanged ends as indicated, and cast-iron valve box.

2. Product: Mueller Resilient Seat Gate Valve, with appropriate type Pacific States Cast Iron Valve Box, or accepted equal.

D. Butterfly Valves From 2 Inches to 24 Inches:

1. AWWA C 504, iron body, bronze disc, resilient replacement seat, mechanical joint or flanged ends as indicated; manual worm gear operator with cast iron valve box as required.

2. Underground manual operators shall be totally enclosed, factory grease packed and sealed, bronze worm gear operators with self-locking gearing; stops shall be provided to prevent over travel of valve disc.

3. Valve operators shall be geared to close valves slowly. Number of turns to close valve from full open position shall be: 32 for 10-inch and smaller valves, 52 for 12-inch thru 16-inch valves, and 76 for 18-inch thru 24-inch valves. Closing times for larger valves shall be acceptable to the Engineer.

4. Product: Mueller “Lineseal III” Butterfly Valves, with appropriate type Pacific States Cast Iron Valve Box, as acceptable equal.

E. Corporation Stops: shall be type for connecting to copper or polyethylene pipe; Mueller No. H- 15000, or acceptable equal, for up to 2-inch service line.

F. Blow-Off Hydrants: shall be Eclipse No. 85, Non-Freeze Blow-Off Hydrants, or other hydrants acceptable to the District Engineer.

2.03 BEDDING AND COVER MATERIALS

A. Bedding: As specified in Sections 02312 and 02316.

B. Backfill: As specified in Sections 02312 and 02316.

2.04 ACCESSORIES

A. Service Clamps: shall be bronze, double-strap type; Mueller No. H-16134, or acceptable equal, for up to 2-inch service lines.

B. Concrete for Thrust Restraints and Collars: Concrete type specified in Section 03300.

C. Water Line Markers: shall be manufactured of a fiber reinforced composite material; shall be at least 3-3/4 inch wide and at least 66 inches tall; and color shall be “BLUE” for culinary water lines.

1. Standard size, high visibility decals shall be placed on each side of the marker. The decals shall include: the international “No-Dig” symbol; Federal Law Warning to deter vandals; the warning

message, to include “Warning”, and “Water Line”, and “Saratoga Springs, call 801-766-9793”.

2. Markers shall be Rhino Composite Markers, as manufactured by REPNRT, Inc.; or Carsonite Utility Markers; or acceptable equals.

PART 3 EXECUTION

3.01 EXAMINATION

A. Verify that water main and main line tee size, location, and invert are as indicated.

3.02 PREPARATION

A. Cut pipe ends square, ream pipe ends to full pipe diameter, remove burrs.

B. Remove scale and dirt on inside and outside before assembly.

C. Prepare pipe connections to equipment with flanges or mechanical joints.

3.03 TRENCHING

A. See Section 02312 and Sections 02315 and 02316 for additional requirements.

B. Hand trim excavation for accurate placement of pipe to elevations indicated.

C. Form and place concrete for pipe thrust restraints at each change of pipe direction. Place concrete to permit full access to pipe and pipe accessories. Provide required square feet of thrust restraint bearing on undisturbed subsoil as indicated on the drawings.

D. Backfill around sides and to top of pipe with backfill material, tamp in place and compact, then complete backfilling.

3.04 INSTALLATION - PIPE

A. Maintain a horizontal distance of at least 10-foot between the pressure water main and sewer piping, in accordance with State code.

B. Establish elevations of buried piping to ensure not less than four feet of cover over pipe; or as indicated on the drawings and as directed by the Engineer.

C. Install pipe to indicated elevation to within tolerance of one inch.

D. Install ductile iron pressure pipe and fittings according to manufacturer’s recommended installation procedures; and conforming to the requirements of AWWA C 600.

E. Install PVC pressure pipe and fittings to ASTM D 2774.

F. Install pipe lines to line and grade indicated.

G. Install pipe to allow for expansion and contraction without stressing pipe or joints.

H. Install access fittings to permit disinfection of water system performed under Section 02515.

I. Construct concrete thrust blocks at all fittings as indicated on the drawings and as directed by the District Inspector.

J. Install trace wire above top of PVC pipe; coordinate with Section 02312.

K. Install pipe line markers along water lines and at all valves, as directed by District Inspector.

3.05 INSTALLATION - VALVES

A. Set valves on concrete block or other acceptable solid bearing.

B. Center and plumb valve box over valve operating nut. Set box cover flush with finished grade, or as directed by the District Inspector.

C. Construct concrete collars around all valve boxes as directed by the District Inspector.

3.06 CONNECTION TO EXISTING WATER LINE

A. Connection to existing water line shall be made where and as indicated on the drawings and as directed by the Engineer. The sizes of pipe, fittings, valves, couplings and appurtenant items required to make connections shall correspond to the sizes of existing pipes and of project pipes.

B. Excavate to existing pipe line at point of connection; determine actual conditions of existing pipe line and all fittings and appurtenant items required to make the connections; and have all materials needed on site prior to any shut down or cutting into existing pipe lines.

C. Connection to existing pipe line includes: cutting, removing and disposing of sections of existing pipes as required and as directed; furnishing and installing new pipe, fittings, and all appurtenant items; furnishing and installing mechanical joint couplings of the appropriate size to connect the project pipes to the ends of the existing pipes; and all appurtenant work required to complete the connections.

D. Connection to existing pipe line shall be made at such times and within the time limits and according to the directions as agreed to between the Contractor and the Owner.

3.07 FIELD QUALITY CONTROL

A. Clean and flush new water pipe as follows.

1. Take every precaution to prevent dirt, grease, and all other foreign matter from entering each length of pipe before making connections in field.

2. After each section of piping is installed, it shall be thoroughly cleaned to remove rocks, dirt, and other foreign matter by washing, sweeping, scraping or other methods that will not harm lining of pipe.

3. For safety and to prevent rocks and other foreign matter from entering pipe, all open ends of pipe shall be plugged when workmen are not on the job or in the immediate area.

4. All sections of water lines shall be completely flushed.
   a. Pipe 12-inch diameter and larger shall be flushed at a rate of 3.0 feet per second.
   b. Pipe under 12-inch diameter shall be flushed at a rate of 4.0 feet per second.

5. Water required for flushing and testing shall be of potable quality; and shall be furnished by the Contractor.

6. All temporary connections to other potable water sources for flushing and drainage shall be furnished, installed, and subsequently removed by the Contractor after completion of the operation.

B. Perform field inspection and testing in accordance with Section 01400.

C. Pipe installation shall be inspected by the District Engineer or Inspector prior to backfilling of trench; backfilling will be done only after it is authorized by the District Engineer or District Inspector. Pipe installation shall conform to AWWA C600, as described in paragraph 3.04.D above.

D. Pressure test water piping to 1.25 times pipe line working pressure in psi.

E. If tests indicate Work does not meet specified requirements, remove Work, replace and retest at no cost to Owner.

END OF SECTION

SECTION 02515

DISINFECTION OF WATER DISTRIBUTION SYSTEM

PART 1 GENERAL

1.01 SECTION INCLUDES

A. Disinfection of project pipe lines specified in Section 02510.

B. Testing and reporting results.

1.02 RELATED SECTIONS

A. Section 02510 - Water Distribution System.

1.03 REFERENCES

A. AWWA B300 - Hypochlorites; American Water Works Association.

B. AWWA B301 - Liquid Chlorine; American Water Works Association.

C. AWWA B302 - Ammonium Sulfate; American Water Works Association.

D. AWWA B303 - Sodium Chlorite; American Water Works Association.

E. AWWA C651 - Disinfecting Water Mains; American Water Works Association).

F. Use the latest edition of the above reference standards as of the date of the Project.

1.04 SUBMITTALS

A. See Section 01300 - Administrative Requirements, for submittal procedures.

B. Test Reports: Indicate results comparative to specified requirements.

C. Certificate: Certify that cleanliness of water distribution system meets or exceeds specified requirements.

D. Disinfection report:

1. Type and form of disinfectant used.
2. Date and time of disinfectant injection start and time of completion.
3. Test locations.
4. Initial and 24-hour disinfectant residuals (quantity in treated water) in ppm for each outlet tested.
5. Date and time of flushing start and completion.
6. Disinfectant residual after flushing in ppm for each outlet tested.

E. Bacteriological report:

1. Date issued, project name, and testing laboratory name, address, and telephone number.
2. Time and date of water sample collection.

3. Name of person collecting samples.

4. Test locations.

5. Initial and 24-hour disinfectant residuals in ppm for each outlet tested.

6. Coliform bacteria test results for each outlet tested.

7. Certification that water conforms, or fails to conform, to bacterial standards of State.

1.05 QUALITY ASSURANCE

A. Perform Work in accordance with AWWA C651.

B. Testing Firm: Company specializing in testing potable water systems, certified by governing authorities of Utah.

C. Submit bacteriologist's signature and authority associated with testing.

1.06 REGULATORY REQUIREMENTS

A. Conform to applicable code or regulation for performing the work of this Section.

B. Provide certificate of compliance from authority having jurisdiction indicating approval of water system.

PART 2 PRODUCTS

2.01 DISINFECTION CHEMICALS

A. Chemicals: AWWA B300, Hypochlorite, AWWA B301, Liquid Chlorine, AWWA B302, Ammonium Sulfate, and AWWA B303, Sodium Chlorite.

PART 3 EXECUTION

3.01 EXAMINATION

A. Verify that piping system has been cleaned, inspected, and pressure tested.

3.02 EXECUTION

A. Provide and attach required equipment to perform the work of this Section.

B. Introduce treatment into piping system.

C. Maintain disinfectant in system for 24 hours.

D. Flush, circulate, and clean until required cleanliness is achieved; use municipal domestic water.

E. Replace permanent system devices removed for disinfection.

F. Pressure test system to 1.25 times the system working pressure, in psi. Repair leaks and re test.

3.03 FIELD QUALITY CONTROL

A. Perform field inspection and testing in accordance with Section 01400.

B. Test samples in accordance with AWWA C651.

END OF SECTION

SECTION 02518

BOOSTER PUMP STATION

PART 1 GENERAL

1.01 SECTION INCLUDES

A. Booster pump station; including concrete building, pipe, fittings, valves, pumps, electrical system, and all appurtenant items.

1.02 RELATED SECTIONS

A. Section 02315 - Excavation: Excavating for structures and appurtenant items.

B. Section 02316 - Fill and Backfill: Bedding and backfilling.

C. Section 02510 - Water Distribution System: Pipe, fittings, valves and appurtenant items.

D. Section 02515 - Disinfection of Water Distribution Systems: Disinfection of station piping.

E. Section 02680 - Secondary Water System: Pipe, fittings, valves and appurtenant items.

F. Section 03300 - Cast-in-Place Concrete: Concrete for concrete vault and thrust restraints.

1.03 REFERENCES

A. See appropriate sections of these specifications.

1.04 MEASUREMENT AND PAYMENT

A. See Section 02100 - Measurement and Payment.

1.05 SUBMITTALS

A. See Section 01300 - Administrative Requirements, for submittal procedures.

B. Product Data: Provide data on pipe materials, pipe fittings, valves and accessories.

C. Manufacturer's Certificate: Certify that products meet or exceed specified requirements.

D. Project Record Documents: Record actual locations of pipe lines, valves, connections, thrust restraints, and invert elevations. Identify and describe unexpected variations to subsoil conditions or discovery of uncharted utilities.

1.06 QUALITY ASSURANCE

A. Perform Work in accordance with Owner's requirements as described herein.

1.07 DELIVERY, STORAGE, AND HANDLING

A. Deliver and store pumps, valves, equipment and appurtenant items in shipping containers with labeling in place.

B. Materials and equipment to be supplied by others shall be picked up at the supplier’s warehouse and delivered to the job site.

PART 2 PRODUCTS

2.01 PUMPHOUSE BUILDING

A. PUMPHOUSE Building. The building for the booster pump station shall be constructed as indicated on the project drawings and as directed by the District Inspector.

1. Poured-in-Place Concrete. Poured-in-place reinforced concrete for footings, foundation walls, floors and appurtenant concrete items shall conform to applicable requirements of Section 03300.
   a. Reinforcement. Reinforcing steel shall be as specified in Section 03300, using Grade 60 bar of the size(s) shown on the construction drawings.
   b. Concrete floor finishing shall be as specified in Section 03356.

3. Masonry Work. Masonry work for the masonry building shall conform to applicable requirements of Section 04820.

4. Miscellaneous Metal Work. Furnish and erect miscellaneous metal work as required to complete the booster pump station, as described herein and as shown on the drawings; conforming to the requirements of Section 05200.

5. Carpentry Work. Carpentry work, including framing, wood trusses, and appurtenant work shall conform to applicable requirements of DIVISION 06.

6. Moisture Protection. Roofing shingles, metal panels, metal flashing and trim, joint sealers and appurtenant items shall conform to applicable requirements of DIVISION 07.

7. Doors. Steel doors, skylights, door hardware and appurtenant items shall conform to applicable requirements of DIVISION 08.

8. Finishes. Finish work, including painting and appurtenant work shall conform to applicable requirements of DIVISION 09.

9. Louvers. Louvers and appurtenant work shall conform to applicable requirements of DIVISION 10.

10. Mechanical Work. Mechanical work, including plumbing, fans, heating, cooling and appurtenant work shall conform to applicable requirements of DIVISION 15.

11. Electrical Work. Electrical work shall conform to applicable requirements of DIVISION 16.

12. Proprietary Items. Provide proprietary items of the type, size and manufacture noted on the drawings or as required to complete the work, or acceptable equals.

2.02 BOOSTER PUMPS

A. Booster pumps, pump columns, power cables, pump can, electric motors, pump discharge heads and all appurtenant items shall be furnished by Pump Supplier; and stored in their warehouse.

1. Booster pump shall be as indicated on project plans.

2. Electric motors shall be 480-volt, 3 phase, as indicated on project plans.

B. Pump Controllers shall be “Pump Smart” motor controllers with all appurtenant pump protection and controls. All appurtenant items shall be furnished by Pump Supplier; and stored in their warehouse.

C. Disconnect Switches: NEMA 250 Type 1 enclosure; sized for connected load, and as indicated. All appurtenant items shall be furnished by Pump Supplier; and stored in their warehouse.

D. Low Pressure Cut-Off Switch: Low voltage relay type; shut-off pump at pre-set water pressure in suction line. All appurtenant items shall be furnished by Pump Supplier; and stored in their warehouse.

E. Control Voltage: 120 VAC.

F. Pressure Sensing Switch: Low voltage relay type, fixed settings to start and shut-off pump motor at pre-set pressure points; and low-pressure cutoff set at pre-set pressure point. All appurtenant items shall be furnished by Pump Supplier; and stored in their warehouse.

2.03 PUMP STATION PLUMBING

A. Pipe, Equipment, and Fittings and all appurtenant items shall be furnished by Contractor; and stored in their warehouse.

1. Ductile Iron Pipe: AWWA C151: See Section 02510. Exposed pipe and fittings shall not be coated with coal tar pitch varnish; but shall be painted as specified herein.

2. Steel Pipe: AWWA C200, Schedule 40 steel pipe, with flanged ends. Pipe and fittings shall be painted as indicated on the drawings.

3. Copper Tubing: ASTM B 88, Type K, annealed: See Section 02510.

B. Valves. All appurtenant items shall be furnished by Contractor; and stored in their warehouse.

1. Manufacturer's name and pressure rating marked on valve body.

2. Gate Valves: See Section 02510 and Section 02680.

3. Butterfly Valves: See Section 02510 and Section 02680.

5. Combination Air-Vacuum Release Valves.
   a. Valves shall be designed to release large quantities of air from pipes during filling, admit large quantities of air into pipes during draining, and release small accumulations of air during normal operation of pipes.
   b. Valves shall be equal in quality to "Heavy-Duty Combination Air Release Valves, No. 143C", as manufactured by Valve and Primer Corp. (APCO); and shall meet the provisions of these specifications.

6. Hose Gate Valves.
   a. Hose gate valves shall be high grade brass with handwheel, inside screw ends, rising stem, screwed bonnet, taper wedge double disc. Valve shall be designed to operate at 200 psi water pressure.
   b. Hose gate valves shall be equal to Powell U.S. Bronze Hose Gate Valve No. 527, or other valves acceptable to the District Engineer.

C. Miscellaneous Items. All appurtenant items shall be furnished by Contractor; and stored in their warehouse.

1. Flanged Coupling Adapters. The flanged coupling adapters shall be Rockwell Type 912 or Type 913, or other couplings acceptable to the District Engineer, with anchor studs as recommended by the manufacturer; for connecting ductile iron pipe to the flanged valves, equipment and fittings.

2. Mechanical Couplings. The mechanical couplings shall be Dresser, Rockwell, or other couplings acceptable to the District Engineer, for connecting the size and type of pipe shown on the drawings. Couplings exposed to soil shall be primed and coated with a 1/4-inch layer of coal tar or approved rust preventing wax compound.

3. Gauges. Gauges shall be as shown on the drawings and of the size and quality equal to or better than United States Gauge "A" Line, Figure No. 5000. Gauges shall have a range of 0 to 350 psi.
4. Gauge Cocks. Gauge cocks shall be of high-grade bronze with tee head; designed for 200 psi water pressure, and factory-tested to 300 psi; Crane Nos. 708, 712, 744, or other valves acceptable to the District Engineer.

5. Service Clamps: shall be bronze, double-strap type; Mueller No. H-16134, or clamps acceptable to the

District Engineer, for up to 2-inch service lines.

6. Other Items. Other miscellaneous materials shall be as indicated on the drawings.

D. Hangers, Supports and Blocks. All appurtenant items shall be furnished by Contractor; and stored in their warehouse. Concrete supports, if any to be constructed by Contractor.

1. Provide all hangers, supports, clamps, guides, sleeves, inserts, anchors and other such devices required for hanging or supporting pipe, preserving alignment, prevention of movement, passage of pipe through walls and floors, or securing pipe in any manner. The required number, location and detail of such items may or may not be indicated on the drawings; but, in any case, such work shall be provided as work incidental to furnishing and installing any type of pipe, fittings and appurtenances, and no extra payment will be made for this work.
   a. Piping shall be supported or suspended in such manner as to prevent sagging or over stressing of pipe, valves, fittings or connections; and so that no pipe, fittings, valves or other items transfer load or strain to equipment of any kind.

2. Supports.
   a. Concrete supports shall be installed under pipe and valves wherever shown on the drawings. Concrete supports shall be neatly constructed and finished, as indicated on the drawings and as directed by the District Engineer. No supports shall be made until all pipe is in its final position.
   b. All other pipe supports shall be of the adjustable type of the style and size recommended by the manufacturer; and shall be located as indicated on the drawings and as directed by the District Engineer. Floor flanges shall be of the size required to fit the pipe attached to the saddle support and as recommended by the manufacturer. Adjustable pipe supports shall be used as kick blocks for pipe in open locations.

3. Blocks. Concrete thrust blocks shall be constructed as shown on District Standard drawings. Steel straps shall be installed as indicated and as directed.

E. Miscellaneous. Miscellaneous appurtenant items shall be as indicated on the drawings or as required to complete the station.

2.05 BEDDING AND BACKFILL MATERIALS

A. Bedding: As specified in Sections 02315 and 02316.

B. Backfill: As specified in Sections 02315 and 02316.

2.06 ACCESSORIES

A. Concrete for Thrust Restraints: Concrete type specified in Section 03300.

PART 3 EXECUTION

3.01 EXAMINATION

A. Verify that water main size, location, and invert are as indicated.

3.02 PREPARATION

A. Cut pipe ends square, ream pipe ends to full pipe diameter, remove burrs.

B. Remove scale and dirt on inside and outside before assembly.

C. Prepare pipe connections to equipment with flanges or mechanical joints.

3.03 EXCAVATING

A. See Section 02312 and Sections 02315 and 02316 for additional requirements.

B. Hand trim excavation for accurate placement of pipe to elevations indicated.

C. Form and place concrete for pipe thrust restraints at each change of pipe direction. Place concrete to permit full access to pipe and pipe accessories. Provide required square foot of thrust restraint bearing on undisturbed subsoil as indicated on the drawings.

D. Backfill around sides and to top of pipe with backfill material, tamp in place and compact, then complete backfilling.

3.04 CONSTRUCTION - PUMPHOUSE BUILDING

A. Construct the PUMPHOUSE building for the booster pump station at the location indicated on the drawings and as directed by the District Engineer; in accordance with the details shown on the construction drawings and as specified herein.

B. Earthwork shall be done in accordance with applicable requirements of Section 02315.

1. Foundation Material. Where native material encountered at the foundation depth is considered unsuitable by the Engineer, the unsuitable material shall be removed and replaced by the appropriate borrow material.

2. Excess Material. Unsatisfactory and excess excavated materials shall be removed from the work site and legally disposed of.

C. PUMPHOUSE Building. The building shall be constructed with reinforced concrete footings, foundation walls and floor; 2X6 wood framed walls; hollow metal doors and frames, and hardware; roof system, including roof trusses, plywood, metal roof system, metal siding, metal panels, rain gutters and downspouts, and appurtenant items; heating, cooling and ventilating systems, including unit heaters, wall mounted air conditioning unit, thermostats, exhaust fans, louvers, and appurtenant items; floor drains; electrical system, including lighting panel, interior and exterior light fixtures, wire and conduit, switches, outlets, equipment for SCADA system, and appurtenant items; and all appurtenant work to complete building.

1. The booster pump station construction shall conform to the requirements of the International Building Code, requirements of Weber County, and of the following Divisions of these project Specifications:
   a. DIVISION 03 - Concrete Work.
   b. DIVISION 04 - Masonry Work.
   c. DIVISION 05 - Miscellaneous Metal Work.
   d. DIVISION 06 - Carpentry Work and Wood Trusses.
   e. DIVISION 07 - Roofing Shingles, Metal Panels, Metal Flashing and Trim, and Joint Sealers.
   f. DIVISION 08 - Steel Doors, Skylights and Door Hardware.
   g. DIVISION 09 - Painting.
   h. DIVISION 15 - Plumbing, Fans and appurtenant Items.
   i. DIVISION 16 - Electrical Work.

2. Pump station piping shall be constructed as indicated on the drawings and as directed.

3. Proprietary Items. Provide proprietary items of the type, size and manufacture noted on the drawings or as required to complete the work, or acceptable equals.

3.05 INSTALLATION - PLUMBING

A. All pipe, fittings, valves, equipment and appurtenant items, together with supports and anchors, shall be installed as specified herein and as indicated on the drawings; in conformity with State plumbing codes.
B. Equipment shall be installed as shown on the drawings, and in accordance with accepted manufacturer's written instructions.

C. All material and workmanship shall conform to applicable requirements of the Utah Plumbing Code.

D. Install pipe to indicated elevation to within tolerance of one inch.

E. Install ductile iron piping and fittings to AWWA C600.

F. Install pipe to allow for expansion and contraction without stressing pipe or joints.

G. Install access fittings to permit disinfection of water system performed under Section 02515.

H. Set valves on concrete block or other acceptable solid bearing.

I. After plumbing system has been installed and completed, it shall be tested and disinfected as specified herein; including an operating test for acceptance of the work. Tests shall be performed in the presence of the District Engineer or his authorized representative.

3.05 INSTALLATION - PUMPS

A. All pumps, controls, accessories and appurtenant items, together with supports and anchors, shall be installed according to the manufacturer's written instructions and recommendations, as specified herein and as indicated on the drawings; in conformity with State plumbing codes.

B. Install pumps plumb and to indicated elevation to within tolerance of one-half inch.

C. After pumps have been installed and completed, they shall be tested and disinfected as specified herein; including an operating test for acceptance of the work. Tests shall be performed in the presence of the District Engineer or his authorized representative.

3.06 INSTALLATION - ELECTRICAL SYSTEM

A. The complete electrical system and appurtenant items shall be installed as specified herein and as indicated on the drawings; in conformity with State and local electrical codes.

B. The electrical system shall include all equipment required for the SCADA system for monitoring and controlling the operation of the booster pump station. The equipment shall be compatible with the District's system and shall be approved by the District Engineer. The SCADA system will be installed by the District's contractor.

C. After the electrical system and SCADA system has been installed and completed, it shall be tested as specified herein; including an operating test for acceptance of the work. Tests shall be performed in the presence of the District Engineer or his authorized representative.

3.07 FIELD QUALITY CONTROL

A. Perform field inspection and testing in accordance with Section 01400.

B. Pressure test water piping to 1.25 times pipe line working pressure in psi.

C. If tests indicate Work does not meet specified requirements, remove Work, replace and retest at no cost to Owner.

END OF SECTION

SECTION 02635

STORM DRAIN SYSTEM

PART 1 GENERAL

1.01 SECTION INCLUDES

A. Storm drain pipe, fittings, and accessories.

B. Connection of project storm drain pipe line to existing storm drains.

C. Cleanout boxes, and appurtenant items.

1.02 RELATED SECTIONS

A. Section 02312 - Trenching for Pipe Work: Excavating, bedding, backfilling and compacting.

B. Section 02315 - Excavation: Excavating for structures and appurtenant items.

C. Section 02316 - Fill and Backfill: Bedding and backfilling.

D. Section 03300 - Cast-in-Place Concrete: Concrete for miscellaneous construction.

1.03 REFERENCES

A. ASTM C 14 - Standard Specification for Concrete Sewer, Storm Drain, and Culvert Pipe.

B. ASTM C 76 - Standard Specification for Reinforced Concrete Culvert, Storm Drain, and Sewer Pipe.

C. ASTM C 443 - Standard Specification for Joints for Circular Concrete Sewer and Culvert Pipe, Using Rubber Gaskets.

D. Use the latest edition of the above reference standards as of the date of the project.

1.04 DEFINITIONS

A. Bedding: Fill placed under, beside and directly over pipe, prior to subsequent backfill operations.

1.05 SUBMITTALS

A. See Section 01300 - Administrative Requirements, for submittal procedures.

B. Product Data: Provide data indicating pipe, pipe accessories, and miscellaneous structures.

C. Manufacturer's Installation Instructions: Indicate special procedures required to install Products specified.

D. Manufacturer's Certificate: Certify that products meet or exceed specified requirements.

E. Project Record Documents:

1. Record location of pipe lines, connections, cleanouts, gutter inlet boxes, inlet boxes, miscellaneous structures and invert elevations.

2. Identify and describe unexpected variations to subsoil conditions or discovery of uncharted utilities.

1.06 REGULATORY REQUIREMENTS

A. Conform to applicable code for materials and installation of the Work of this section.

1.07 PROJECT CONDITIONS

A. Coordinate the Work with other contractor working in the area.

PART 2 PRODUCTS

2.01 DRAIN PIPE MATERIALS

A. Concrete Pipe: Nonreinforced, ASTM C 14 (ASTM C 14M), Class 3 minimum; inside nominal diameter as indicated, bell and spigot end joints.

B. Concrete Pipe: Reinforced, ASTM C 76 (ASTM C 76M), Class III minimum with Wall type B; mesh reinforcement; inside nominal diameter as indicated, bell and spigot end joints.

C. Reinforced Concrete Pipe Joint Device: ASTM C 443 (ASTM C 443M), rubber compression gasket joint.

2.02 PIPE ACCESSORIES

A. Fittings: Same material as pipe molded or formed to suit pipe size and end design, in required tee, bends, elbows, cleanouts, reducers, traps and other configurations required.

2.03 STORM DRAIN STRUCTURES

A. Frames and Covers: Heavy duty cast iron, as indicated or acceptable equal; designed for H-20 highway loading.

   1. Cleanout box:
      a. Lid Design: solid, with pick holes; size and type as indicated.

B. Precast Box: type and size as indicated; minimum wall thickness of 6-inches, minimum top and bottom slab thickness of 8-inches; design for H-20 highway loading; sleeved to receive storm drain pipe sections. Concrete work shall conform to Section 03300.

C. Cast-in-Place Box: of type and size indicated; concrete work shall conform to Section 03300; sleeved to receive storm drain pipe sections.

D. Joint Filler: flexible, bituminous mastic, gasket type sealant.

2.04 BEDDING AND BACKFILL MATERIALS

A. Bedding: As specified in Sections 02312 and 02316.

B. Backfill: As specified in Sections 02312 and 02316.

PART 3 EXECUTION

3.01 TRENCHING

A. See Section 02312, Trenching for Pipe Work, and Sections 02315 and 02316 for additional requirements.

B. Hand trim excavation for accurate placement of pipe to elevations indicated.

C. Backfill around pipe with bedding material as indicated, tamp in place and compact; then complete backfilling.

3.02 INSTALLATION - PIPE

A. Verify that trench cut is ready to receive work and excavations, dimensions, and elevations are as indicated on drawings.

B. Install concrete pipe, fittings, and accessories in accordance with manufacturer's instructions. Seal watertight.

C. Install pipe to slope gradients noted on drawings; with maximum variation from true slope of0.10 feet.

D. Connect to existing storm drain boxes as indicated.

3.03 INSTALLATION - STORM DRAIN STRUCTURES

A. Trim bottom of excavation clean and smooth to correct elevation; place bedding as indicated.

B. Install precast boxes plumb, according to the manufacturer's instructions, at the design elevations as indicated; connect project pipes with appropriate type flexible couplings.

C. Construct cast-in-place concrete boxes, as indicated; connect project pipes with appropriate type flexible couplings.

D. Establish elevations and pipe inverts for inlets and outlets as indicated.

E. Install lid and frame level in top slab of box, as indicated, according to manufacturer's instructions.

F. Fill all joints between box sections, grade rings, and cover frames with joint sealant.

3.04 CONNECTION TO EXISTING STORM DRAIN LINE

A. Excavate as required to locate existing storm drain line as the point of connection.

B. Cut the existing storm drain pipe and remove section of pipe as required and as directed.

C. Construct concrete cleanout box where and as indicated.

D. Furnish and install new storm drain pipe and fittings, as required and as directed. New pipe to match existing pipe in type and size.

E. Connect new pipe to ends of existing storm drain pipe and to new cleanout box with appropriate type and size couplings.

F. Backfill excavation to original ground elevation and compact backfill to required density.

3.05 FIELD QUALITY CONTROL

A. Perform field inspection and testing in accordance with Section 01400.

B. If tests indicate Work does not meet specified requirements, remove Work, replace and retest at no cost to Owner.

C. Low Pressure Air Test: Pressurize line to be tested to approximately 3.5 psi. Allow pressure to stabilize for a minimum of 2 minutes; if during this period pressure drops below 3.5 psi, more air shall be added to raise pressure up to 3.5 psi. After this stabilization period, air supply shall be disconnected and timing shall begin. The time of the test, in minutes, shall be equal to the pipe diameter, in inches. The maximum allowable pressure drop during the specified time period shall be 1.0 psi.

D. Infiltration Test: Infiltration test required when pipe line is below groundwater level. The amount of water leaking into the pipe shall be measured; allowable infiltration shall be one gallon per day per inch diameter of pipe per mile of pipe.

E. Exfiltration Test: Exfiltration test required when pipe line is above groundwater level. The section of pipe to be tested, including upstream structure, shall be filled with water to not less than four feet nor more than eight feet above lowest point of pipe section being tested. The amount of water added during the test period to maintain water level shall be measured; allowable exfiltration shall be one gallon per day per inch diameter of pipe per mile of pipe.

F. Deflection Test: Check alignment by sighting through pipe or by measurements. Pipe lines shall not vary from alignment shown on the drawings by more than 0.25 foot.

3.05 PROTECTION

A. Protect pipe and bedding cover from damage or displacement until backfilling operation is in progress.

END OF SECTION

SECTION 02721

GRAVEL SURFACING AND ROAD BASE

PART 1 GENERAL

1.01 SECTION INCLUDES

A. New gravel road base.

B. Restore gravel road base.

C. New gravel road surfacing.

D. Restore gravel road surfacing.

1.02 RELATED SECTIONS

A. Section 02312 - Trenching for Pipe Work.

B. Section 02316 - Fill and Backfill: Compacted fill under base course.

C. Section 02741 - Bituminous Paving: Binder and finish asphalt courses.

1.03 REFERENCES

A. AASHTO M 147 - Materials for Aggregate and Soil-Aggregate; American Association of State Highway and Transportation Officials.

B. AASHTO T 180 - Standard Method of Test for Moisture-Density Relations of Soils Using a 10-lb (4.54 kg) Rammer and an 18-in. (457 mm) Drop; American Association of State Highway and Transportation Officials.

C. ASTM C 136 - Standard Test Method for Sieve Analysis of Fine and Coarse Aggregates.

D. ASTM D 698 - Test Method for Laboratory Compaction Characteristics of Soil Using Standard Effort (12,400 ft-lbf/ft3 (600 kN-m/m3)).

E. ASTM D 1556 - Standard Test Method for Density and Unit Weight of Soil in Place by the Sand-Cone Method.

F. ASTM D 2487 - Standard Classification of Soils for Engineering Purposes (Unified Soil Classification System).

G. ASTM D 2922 - Standard Test Methods for Density of Soil and Soil-Aggregate in Place by Nuclear Methods (Shallow Depth).

H. Use the latest issue of the above reference standards as of the date of the Project.

1.04 SUBMITTALS

A. See Section 01300 - Administrative Requirements, for submittal procedures.

B. Materials Sources: Submit name of imported materials source.

C. Aggregate Composition Test Reports: Results of laboratory tests on proposed and actual materials used.

D. Compaction Density Test Reports.

1.05 PROJECT CONDITIONS

A. Provide sufficient quantities of gravel material to meet project schedule and requirements. When necessary, store materials on site in advance of need.

B. When aggregate materials need to be stored on site, locate stockpiles where indicated.

   1. Separate differing materials with dividers or stockpile separately to prevent intermixing.

   2. Prevent contamination.

   3. Protect stockpiles from erosion and deterioration of materials.

C. Verify that survey bench marks and intended elevations for the Work are as indicated.

PART 2 PRODUCTS

2.01 MATERIALS

A. Gravel Road Base: Gravel road base, conforming to State Department of Transportation Standard Specifications, Section 301.

B. Gravel Road Surfacing: Gravel road surfacing, conforming to State Department of Transportation Standard Specifications, Section 301.

C. Gravel material shall be a Blended Aggregate material: Angular crushed stone; free of shale, clay, friable material and debris.

   1. Graded in accordance with ASTM C 136, within the following limits:
      a. 1-inch sieve: 100 percent passing.
      b. 1/2-inch sieve: 79 to 91 percent passing.
      c. No. 4 sieve: 49 to 61 percent passing.
      d. No. 16 sieve: 27 to 35 percent passing.
      e. No. 200: 7 to 11 percent passing.

D. Portion of aggregate passing through No. 40 sieve shall be non-plastic.

2.02 SOURCE QUALITY CONTROL

A. See Section 01400 - Quality Requirements, for general requirements for testing and analysis of aggregate materials.

B. Where aggregate materials are specified using ASTM D 2487 classification, test and analyze samples for compliance before delivery to site.

C. If tests indicate materials do not meet specified requirements, change material and retest.

D. Provide materials of each type from same source throughout the Work.

PART 3 EXECUTION

3.01 EXAMINATION

A. For new gravel road base and gravel surfacing, verify that sub-base has been compacted and accepted by the District Engineer or District Inspector, that gradients and elevations are correct, and that it is dry.

B. Verify that all areas of collapsible soil have been identified and properly prepared for road base.

C. For restoration of gravel road base and gravel surfacing, verify trenches and excavations have been backfilled, compacted and accepted by the District Engineer or District Inspector, that gradients and elevations are correct, and that they are dry.

3.02 PREPARATION

A. Correct irregularities in substrate gradient and elevation by scarifying, reshaping, and re-compacting.

B. Do not place aggregate on soft, muddy, or frozen surfaces.

3.03 INSTALLATION

A. New gravel road base and surfacing.

1. Place gravel road base material over prepared substrate to provide total compacted thickness as indicated and as directed by the District Inspector.

2. Spread gravel surfacing material over prepared substrate to provide total compacted thickness as indicated and as directed by the District Inspector.

B. Restoration of gravel road base and surfacing.

1. Restore gravel road base, along with temporary gravel surfaces, within one day after trench backfill has been placed, compacted and accepted by the District Inspector.

2. Place temporary gravel surfaces, where gravel surfacing is to be restored, within one day after trench backfill has been placed, compacted and accepted by the District Inspector.

3. Restore gravel surfacing within 7 days after trench backfill has been placed, compacted and accepted by the District Inspector.

4. Temporary gravel shall be maintained by blading, sprinkling, rolling, adding additional gravel as required, and appurtenant work to provide a safe, uniform surface over trench area satisfactory to the District Inspector. The temporary surface shall be restored at least every 7 days until the final surfacing is to be placed; and sprinkled with water at least once each day, including weekends and holidays.

5. When final surfacing is to be placed, remove the temporary gravel to the bottom of the surface to be restored. After removing temporary gravel, the sub-base shall be graded and rolled to provide a compact, smooth base for placement of final surfacing.

6. Spread gravel surfacing material over prepared substrate to provide total compacted thickness equal to the adjacent surfacing, but not less than the thickness as indicated.

7. Place gravel road base material over prepared substrate to provide total compacted thickness equal to the adjacent road base, but not less than the thickness as indicated.

C. Place material at near optimum moisture.

D. Place aggregate in maximum 4-inch layers and roller compact to 95 percent of maximum dry density.

E. Level and contour surfaces to elevations and gradients indicated.

F. Add water to assist compaction. If excess water is apparent, remove aggregate and aerate to reduce moisture content.

G. Use mechanical tamping equipment in areas inaccessible to compaction equipment.

3.04 TOLERANCES

A. Flatness: Maximum variation of 1/4 inch measured with 10-foot straight edge.

B. Scheduled Compacted Thickness: Within 1/4 inch.

C. Variation from Design Elevation: Within 1/2 inch.

3.05 FIELD QUALITY CONTROL

A. See Section 01400 - Quality Requirements, for general requirements for field inspection and testing.

B. Compaction density testing will be performed on compacted aggregate base course in accordance with ASTM D1556 or ASTM D2922.

C. Results will be evaluated in relation to compaction curve determined by testing uncompacted material in accordance with ASTM D 698 ("standard Proctor").

D. If tests indicate work does not meet specified requirements, remove work, replace and retest.

E. Frequency of Tests: At least one test per lift per 150 linear foot of new or restored road base or surfacing, and as directed by the District Engineer or Inspector.

3.06 CLEAN-UP

A. Remove unused stockpiled materials, leave area in a clean and neat condition. Grade stockpile area to prevent standing surface water.

END OF SECTION

SECTION 02850

CONCRETE STREET IMPROVEMENTS

PART 1 GENERAL

1.01 SECTION INCLUDES

A. Cast-in-place concrete curb and gutter and appurtenant items.

B. Cast-in-place concrete sidewalks and appurtenant items.

C. Curb-cut type driveway entrances and appurtenant items.

1.02 RELATED SECTIONS

A. Section 02300 - Roadway and General Excavation.

B. Section 02315 - Structural Excavation.

C. Section 02316 - Fill and Backfill.

D. Section 02721 - Gravel Road Base.

E. Section 03300 - Cast-In-Place Concrete.

1.03 SUBMITTALS

A. See Section 01300 - Administrative Requirements, for submittal procedures.

PART 2 PRODUCTS

2.01 MATERIALS

A. Concrete: As specified in Section 03300 - Cast-in-Place Concrete; using 3/4-inch maximum aggregate.

B. Concrete Reinforcement: As specified in Section 03300.

C. Gravel Base: As specified in Section 02721 - Gravel Road Base.

D. Expansion Joint Filler: Shall be 1/2-inch thick; conforming to ASTM D 1751 or AASHTO M 213. Joint filler shall be one-piece; and shall extend full width and depth of concrete section; 1/4-inch below and conforming to finished top surfaces of concrete items.

PART 3 EXECUTION

3.01 EXAMINATION

A. Verify excavation for concrete items is correct.

3.02 EARTHWORK

A. See Section 02300 - General Excavation and Section 02315 - Structural Excavation for requirements for excavating, backfilling and compacting; See Section 02316 - Fill and Backfill for requirements for filling and backfilling; and see Section 02721 - Gravel Road Base for requirements for gravel base.

B. Hand trim excavations for accurate placement of gravel base for concrete items.

C. Furnish, place, grade and compact gravel base for concrete work, as indicated on the drawings and as directed.

1. Curb and Gutter: compacted thickness shall be 6 inches.

2. Sidewalks: compacted thickness shall be 4 inches.

D. Backfill around completed concrete items to required elevations, tamp in place and compact as required.

3.03 CONSTRUCTION

A. Form Work.

1. Forms shall be set to the required grade and lines, as indicated on the drawing; rigidly braced and secured.

2. Install sufficient quantity of forms to allow continuous progress of work; and so that forms can remain in place for at least 24 hours after placement of concrete.

3. Check completed form work for grade and alignment, before placing any concrete. Tolerances for form work shall not exceed 1/8-inch in 10 feet for the top of forms; and 1/4-inch in 10 feet for the vertical face.

4. Clean forms after each use and coat with form release agent as often as required to ensure separation from concrete without damage.

B. Concrete Placement.

1. Comply with applicable requirements of Section 03300 - Concrete for design, mixing and placement of concrete; and with the requirements herein.

2. Do not place concrete until subgrade and forms have been checked for line and grade; and are acceptable to the Engineer.

3. Moisten subgrade as required to provide a uniform dampened condition at time concrete is placed.

4. Place concrete using methods which will prevent segregation of concrete mix, and with as little rehandling as possible.

5. Deposit and spread concrete in a continuous operation between transverse joints, as far as possible. If interrupted for more than 1/2 hour, place a construction joint.

6. Consolidate concrete along the face of forms with an internal vibrator. Keep vibrator away from joint assemblies or side frames. Consolidate with care to prevent dislocation of reinforcement and joint materials.

7. Use only square-faced shovels for hand spreading and consolidation.

8. Where handicap ramps and curb-cut type driveway entrances are to be constructed, the curb of new curb and gutter shall be eliminated down to the limits and for the width indicated on the drawings and as directed; and the curb shall be sloped on each side of the ramp and driveway entrance as indicated.

C. Expansion Joints. Construct expansion joints true-to-line, with face perpendicular to the surface of the concrete item and at right angle to centerline of the concrete item, unless shown otherwise. Joints shall be filled with joint filler material.

1. Curb and Gutter. Provide expansion joints at a spacing not to exceed 40 feet, on center; where curb and gutter abuts drainage structures and other concrete construction; and elsewhere as indicated on the drawings and as directed by the Engineer.

2. Sidewalks. Provide expansion joints at a spacing not to exceed 40 feet, on center; where new sidewalks abuts ramps, curb and gutter, and other concrete construction; and elsewhere as indicated on the drawings and as directed by the Engineer.

D. Construction Joints. Construct construction joints true-to-line, with face perpendicular to the surface of the concrete item and at right angle to centerline of the concrete item, unless shown otherwise. Joints shall be filled with joint filler material.

1. Provide construction joints where required and as directed by the Engineer.

E. Contraction Joints. Construct contraction (weakened-plane) joints true-to-line, with face perpendicular to the surface of the concrete item and at right angle to centerline of the concrete item, unless shown otherwise.

1. Curb and Gutter. Provide contraction joints at a spacing not to exceed 10 feet, on center; unless indicated otherwise on the drawings and as directed by the Engineer. Construct joints by inserting a 1/8-inch-thick steel division plate, matching cross-section of curb and gutter, into concrete; plate shall not extend into bottom 4-1/2 inches of the curb and gutter. Set division plate into plastic concrete and carefully remove after concrete has hardened.

2. Sidewalks. Provide contraction joints at a spacing not to exceed 4 feet, on center; unless indicated otherwise on the drawings and as directed by the Engineer. Construct joints by inserting a 1/8-inch thick steel division plate into concrete; plate shall embed 1/4 of sidewalk thickness, measured from the top of sidewalk. Set division plate into plastic concrete and carefully remove after concrete has hardened.

F. Finishing and Ruling.

1. After striking off and consolidating concrete, smooth exposed surfaces by screeding and floating; adjust floating to compact surfaces and produce uniform texture.

2. After floating, check surfaces for trueness with a 10-foot-long straightedge. Distribute concrete as required to remove surface irregularities; and refloat repaired surfaces to provide smooth, continuous surfaces with a tolerance of 1/4-inch when measured by the 10-foot-long straightedge.

3. Work edges of gutters, waterways, sidewalks and driveway pavement, transverse joints, and contraction joints with an edging tool; and round to 1/4-inch radius, unless indicated otherwise.

4. Work edges of top back of curbs with an edging tool; and round to 1/2-inch radius, unless indicated otherwise.

5. Finishing:
   a. Curb and Gutter. After completion of floating and when excess moisture and surface sheen has disappeared, trowel finish exposed surfaces smooth, free of trowel marks, and uniform in texture and appearance.
   b. Sidewalks. After completion of floating and when excess moisture and surface sheen has disappeared, broom finish exposed surfaces by pulling a fine-hair broom across concrete surfaces, perpendicular to line of traffic, until uniform in texture and appearance, and acceptable to the Engineer.

G. Form Removal and Repair Work.

1. Forms shall not be removed for at least 24 hours after concrete has been placed, unless otherwise acceptable to the Engineer.

2. After form removal, clean ends of joints and point-up minor honeycombed areas.

3. Remove and replace areas or sections of concrete with major honeycomb areas, as required and as directed by the Engineer.

H. Curing Concrete.

1. Protect and cure finished concrete, complying with applicable requirements of Section 03300 - Concrete.

2. Use moist-curing methods for initial curing, whenever possible.

3. A membrane-forming curing compound shall be used, when directed by the Engineer; applied in accordance with the manufacturer's written instructions.

3.04 SPECIAL CONSTRUCTION

A. Curb-Cut Type Driveway Entrances. Driveway entrances shall consist of modifying the curb of 30-inch curb and gutter and warping surfaces of 6-inch-thick concrete driveway pavement or concrete sidewalk for the width and to the configuration indicated on the drawings, as described herein, and as directed by the Engineer.

1. Curb of curb and gutter shall be eliminated down to the limits indicated on the drawings, and to the width of the existing driveway, or as directed; and the curb shall be sloped on each side of the driveway as indicated.

2. Where the sidewalk is adjacent to the back of curb and gutter, 6-inches thick sidewalk shall be constructed at the driveway entrance, as indicated. The surfaces of the sidewalk shall be shaped to form a smooth entrance from the curb-cut at the curb and gutter to the edge of the sidewalk adjacent to the property line, as indicated and as directed.

3.05 REPAIR AND MAINTENANCE

A. Contractor shall repair and maintain project curb and gutter, waterways, sidewalks, driveway pavement, driveway entrances, handicap ramps, and other concrete structures as required, during the guarantee period.

1. All repairs shall be made with materials similar and equal to those described in these specifications.

2. All construction shall be done as described in these specifications.

B. Contractor shall, just before expiration of the guarantee period, make all such repairs as may be necessary to produce concrete items which will:

1. Conform substantially in contour to the concrete item as first constructed.

2. Be free from cracks or depressions showing disintegration of the concrete mixture of the concrete item.

3. Be free from all settlement of the surface of the concrete pavement holding water, or other settlements showing variation of 3/8-inch or more from the edge of a four-foot-long straightedge.
4. Not have settled because of incomplete compaction of the subgrade.

C. When repairs, that are necessary to be made during the guarantee period, amount to more than fifty percent of a section between two expansion joints, the entire section shall be removed and disposed of; and that section shall be reconstructed in accordance with these specifications.

3.06 PROTECTION OF CONSTRUCTED CONCRETE ITEMS

A. Protect concrete items of this section from damage by subsequent construction activities.

B. Replace damaged concrete items which cannot be repaired to the Engineer's satisfaction.

END OF SECTION

DIVISION 03

CONCRETE

SECTION 03100

CONCRETE FORMWORK

PART 1 GENERAL

1.01 REQUIREMENTS

A. The CONTRACTOR shall furnish all materials for concrete formwork, bracing, shoring, and supports and shall design and construct all falsework, all in accordance with the provisions of the Contract Documents.

1.02 REFERENCE SPECIFICATIONS, CODES, AND STANDARDS

A. Codes: All codes, as referenced herein, are specified in Section 01090, "Reference Standards."

B. Government Standards: PS 1 Construction and Industrial Plywood

PS 20 American Softwood Lumber Standard

C. Commercial Standards: ACI 117 Standard Tolerances for Concrete Construction and Materials

ACI 347 Guide to Formwork for Concrete

D, The CONTRACTOR shall, in accordance with the requirements in Section 01300, "Contractor Submittals," submit the following:

1. Form ties and all related accessories, including taper tie plugs, if taper ties are used.

2. Form gaskets.

1.03 QUALITY ASSURANCE

A. Tolerances: Variation from established grades or lines shall not exceed 1/4-inch in 10 feet and there shall be no offsets or visible waviness in the finished surfaces. All other tolerances shall be within the tolerances of ACI 117.

PART 2 PRODUCTS

1.01 GENERAL

A. All lumber brought on the job site for use as forms, shoring, or bracing shall be new material, except as otherwise expressly accepted by the DISTRICT ENGINEER,

B. All forms shall be smooth surface forms and shall be of the following materials:

1. Walls Steel or plywood

2. Columns Steel, plywood, or fiber glass

3. Roof and floor Plywood

4. All other work Steel panels, plywood or tongue and groove lumber

C. Form materials which may remain or leave residues on or in the concrete shall be classified as acceptable for potable water use by the Environmental Protection Agency within 30 days of applications or use.

D. Forms and falsework to support the roof and floor slabs shall be designed for the total dead load, plus a live load of 50 post (minimum). The minimum design load for combined dead and live loads shall be 100 psf.

2.01 FORM AND FALSEWORK MATERIALS

A. Materials for concrete forms, formwork, and falsework shall conform to the following requirements:

1. Lumber shall be Douglas Fir or Southern Yellow Pine, construction grade or better, in conformance with U.S. Product Standard PS 20.

2. Plywood for concrete formwork shall be new, waterproof, synthetic resin bounded, exterior type Douglas Fir or Southern Yellow Pine plywood manufactured especially for concrete formwork and shall conform to the requirements of PS 1 for Concrete Forms, Class I, and shall be edge sealed.

3. Form materials shall be metal, wood, plywood, or other approved material that will not adversely affect the concrete and will facilitate placement of concrete to the shape, form line, and grade shown.
   a. Metal forms shall be an approved type that will accomplish such results.
   b. Wood forms for surfaces to be painted shall be Medium Density Overlaid plywood, MDO Exterior Grade.

B. Concrete corners.

1. Exterior corners in concrete members shall be provided with 3/4-inch chambers, unless otherwise shown.

2. Re-entrant corners in concrete members shall not have fillets, unless otherwise shown.

2.03 FORM TIES

A. Form ties shall be provided with a plastic cone or other suitable means for forming a conical hole to insure that the form tie may be broken off back of the face of the concrete.

1. The maximum diameter of removable cones for rod ties, or of other removable form tie fasteners having a circular cross section, shall not exceed 1-1/2-inches; and all such fasteners shall be such as to leave holes of regular shape for reaming.

2. Form ties for water retaining structures shall have integral waterstops. Integral waterstops shall tightly fit the form tie so that they cannot be moved from mid point of the tie.

3. Form ties shall be Burke Penta Tie System by The Burke Company; Richmond Snap Ties by the Richmond Screw Anchor Company; or acceptable equal.

B. Removable taper ties may be used when approved by the DISTRICT ENGINEER.

1. A preformed neoprene or polyurethane tapered plug sized to seat at the center of the wall shall be inserted in the hole left by the removal of the taper tie.

2. Use Burke Taper-Tie System by The Burke Company; Taper-Ty by the Richmond Screw Anchor Company; or acceptable equal.

PART 3 EXECUTION

3.01 GENERAL

A. Forms to confine the concrete and shape it to the required lines shall be used wherever necessary.

1 The CONTRACTOR shall assume full responsibility for the adequate design of all forms; and any forms which are unsafe or inadequate in any respect shall promptly be removed from the WORK and replaced at the CONTRACTOR'S expense.

2. Provide worker protection from protruding reinforcement bars in accordance with applicable safety codes.

3. A sufficient number of forms of each kind shall be provided to permit the required rate of progress to be maintained.

4. The design and inspection of concrete forms, falsework, and shoring shall comply with applicable local, state and federal regulations.

5. Plumb and string lines shall be installed before concrete placement and shall be maintained during placement. Such lines shall be in sufficient number and properly installed. During concrete placement, the CONTRACTOR shall continually monitor plumb and string line form positions and immediately correct deficiencies.

B. Concrete forms shall conform to the shape, lines, and dimensions of members as called for on the Drawings, and shall be substantial, free from surface defects, and sufficiently tight to prevent leakage.

1. Forms shall be properly braced or tied together to maintain their position and shape under a load of freshly placed concrete. If adequate foundation for shores cannot be secured, trussed supports shall be provided.

3.02 FORM DESIGN

A. All forms shall be true in every respect to the required shape and size, shall conform to the established alignment and grade, and shall be of sufficient strength and rigidity to maintain their position and shape under the loads and operations incident to placing and vibrating the concrete.

1. Suitable and effective means shall be provided on all forms for holding adjacent edges and ends of panels and sections tightly together and in accurate alignment so as to prevent the formation of ridges, fins, offsets, or similar surface defects in the finished concrete.

2. Plywood, 5/8 inch and greater in thickness, may be fastened directly to studding if the studs are spaced close enough to prevent visible deflection marks in the concrete.

3. The forms shall be tight so as to prevent the loss of water, cement and fines during placing and vibrating of the concrete. Specifically, the bottom of wall forms that rest on concrete footing or slabs shall be provided with a gasket to prevent loss of fines and paste during placement and vibration of concrete. Such gasket may be a 1- to 1-1/2-inch diameter polyethylene rod held in position to the underside of the wall form.

4. Adequate cleanout holes shall be provided at the bottom of each lift of forms. The size, number, and location of such cleanouts shall be as acceptable to the DISTRICT ENGINEER.

5. Whenever concrete cannot be placed from the top of a wall form in a manner that meets the requirements of the Contract Documents, form windows shall be provided in the size and spacing needed to allow placement of concrete to the requirements of Section 03300, Cast-in-Place Concrete. The size, number, and location of such form windows shall be as acceptable to the ENGINEER.

3.03 CONSTRUCTION

A. Vertical Surfaces:

1. All vertical surfaces of concrete members shall be formed, except where placement of the concrete against the ground is shown. Not less than 1-inch of concrete shall be added to the thickness of the concrete member as shown where concrete is permitted to be placed against trimmed ground in lieu of forms. Such permission will be granted only for members of comparatively limited height and where the character of the ground is such that it can be trimmed to the required lines and will stand securely without caving or sloughing until the concrete has been placed.

B. Construction Joints:

1. Concrete construction joints will not be permitted at locations other than those shown or specified, except as may be acceptable to the DISTRICT ENGINEER.

2. When a second lift is placed on hardened concrete, special precautions shall be taken in the way of the number, location, and tightening of ties at the top of the old lift and bottom of the new to prevent any unsatisfactory effect whatsoever on the concrete.

3. Pipe stubs and anchor bolts shall be set in the forms where required.

C. Form Ties:

1. Embedded Ties:
   a. Holes left by the removal of form tie cones shall be reamed with suitable toothed reamers so as to leave the surface of the holes clean and rough before being filled with mortar as specified for “Finish of Concrete Surfaces", in Section 03300, “Cast-In-Place Concrete”.
   b. Wire ties for holding forms will not be permitted.
   c. No form tying device or part thereof, other than metal, shall be left embedded in the concrete.
   d. Ties shall not be removed in such a manner as to leave a hole extending through the interior of the concrete members.
   e. The use of snap ties which cause spalling of the concrete upon form stripping or tie removal will not be permitted.
   f. If steel panel forms are used, rubber grommets shall be provided where the ties pass through the form in order to prevent loss of cement paste.
   g. Where metal rods extending through the concrete are used to support or to strengthen forms, the rods shall remain embedded and shall terminate not less than 1-inch back from the formed face or faces of the concrete.

2. Removable Ties:
   a. Where taper ties are approved for use, the larger end of the taper tie shall be on the wet side of walls in water retraining structures.
   b. After the taper tie is removed, the hole shall be thoroughly cleaned and roughened for bond.
   c. A precast neoprene or polyurethane tapered plug shall be located at the wall centerline.
   d. The hole shall be completely filled with no shrink grout for water bearing and below grade walls. The hole shall be completely filled with no shrink or regular cement gout for above grade walls which are dry on both sides. Exposed faces of walls shall have the outer 2 inches of the exposed face filled with a cement grout which shall match the color and texture of the surrounding wall surface.

3.04 REUSE OF FORMS

A. Form may be reused only if in good condition and only if acceptable to the DISTRICT ENGINEER.

B. Light sanding between uses will be required wherever necessary to obtain uniform surface texture on all exposed concrete surfaces. Exposed concrete surfaces are defined as surfaces which are permanently exposed to view.

C. In the case of forms for the inside wall surfaces of hydraulic/water retaining structures, unused tie rod holes in forms shall be covered with metal caps or shall be filled by other methods acceptable to the ENGINEER.

3.05 REMOVAL OF FORMS

A. Careful procedures for the removal of forms shall be strictly followed, and this work shall be done with care so as to avoid injury to the concrete.

B. No heavy loading on green concrete will be permitted.

C. In the case of roof slabs and above ground floor slabs, forms shall remain in place until test cylinders for the roof concrete attains a minimum compressive strength of 75 percent of the 28-day strength specified in Section 0330, “Cast-in-Place Concrete"; provided, that no forms shall be disturbed or removed under an individual panel or unit before the concrete in the adjacent panel or unit has attained 75 percent of the specified 28-day strength and has been in place for a minimum of 7 days.

1. The time required to establish said strength shall be as determined by the ENGINEER who will make

several test cylinders for this purpose from concrete used in the first group of roof panels placed.

2. If the time so determined is more than the 7-day minimum, then that time shall be used as the minimum length of time.

D. Forms for all vertical walls of water holding structures shall remain in place at least 36 hours after the concrete has been placed.

E. Forms for all parts of the WORK not specifically mentioned herein shall remain in place for periods of time as recommended in ACI 347.

3.06 MAINTENANCE OF FORMS

A. Forms shall be maintained at all times in good condition, particularly as to size, shape, strength, rigidity, tightness, and smoothness of surface.

B Forms, when in place, shall conform to the established alignment and grades.

C. Before concrete is placed, the forms shall be thoroughly cleaned.

D. The form surfaces shall be treated with a non-staining mineral oil or other lubricant acceptable to the ENGINEER.

1. Any excess lubricant shall be satisfactorily removed before placing the concrete.

2. Where field oiling of forms is required, the CONTRACTOR shall perform the oiling at least two weeks in advance of their use.

3. Care shall be exercised to keep oil off the surfaces of steel reinforcement and other metal items to be embedded in concrete.

3.07 FALSEWORK

A. The CONTRACTOR shall be responsible for the design, engineering, construction, maintenance, and safety of all falsework, including staging, walkways, forms, ladders, and similar appurtenances, which shall equal or exceed the applicable requirements of the provisions of the OSHA Safety and Health Standards for Construction, and the requirements specified herein.

B. All falsework shall be designed and constructed to provide the necessary rigidity and to support the loads. Falsework for the support of a superstructure shall be designed to support the loads that would be imposed if the entire superstructure was placed at one time.

C. Falsework shall be placed upon a solid footing, safe against undermining, and protected from softening. When the falsework is supported on timber piles, the maximum calculated pile loading shall not exceed 20 tons. When falsework is supported on any portion of the structure which is already constructed, the load imposed by the falsework shall be spread, distributed, and braced in such a way as to avoid any possibility of damage to the structure.

END OF SECTION

SECTION 03200

REINFORCEMENT STEEL

PART 1 GENERAL

1.01 REQUIREMENTS

A. The CONTRACTOR shall furnish, fabricate, and place all concrete reinforcement steel, welded wire fabric, couplers, and concrete inserts for use in reinforced concrete construction; and shall perform all appurtenant work, including all the wires, clips, supports, chairs, spacers, and other accessories, all in accordance with the Contract Documents.

1.02 REFERENCE SPECIFICATIONS, CODES AND STANDARDS

A. Codes: All codes, as referenced herein, are specified in Section 01090, “Reference Standards”.

B. Commercial Standards.

1. ACI 315 Details and Detailing of Concrete Reinforcement
2. ACI 318 Building Code Requirements for Reinforced Concrete
3. CRSI MSP-1 Concrete Reinforcing Steel Institute Manual of Standard Practice
4. WRI Manual of Standard Practice for Welded Wire Fabric
5. AWS DI.4 Structural Welding Code – Reinforcing Steel
6. ASTM A 82 Specification for Steel Wire, Plain, for Concrete Reinforcement
7. ASTM A 185 Specification for Welded Steel Wire Fabric, Plain, for Concrete Reinforcement
8. ASTM A 615 Specification for Deformed and Plain Billet-Steel Bars for Concrete Reinforcement
9. ASTM A 775 Specification for Epoxy-coated Reinforcing Steel Bars

1.03 CONTRACTOR SUBMITTALS

A. The CONTRACTOR shall furnish shop bending diagrams, placing lists, and drawings of all reinforcement steel prior to fabrication in accordance with the requirements of Section 01300 - Contractor Submittals.

B. Details of the concrete reinforcement steel and concrete inserts shall be submitted by the CONTRACTOR at the earliest possible date after receipt by the CONTRACTOR of the Notice to Proceed.

1. Said details of reinforcement steel for fabrication and erection shall conform to ACI 315 and the requirements specified and shown.

2. The shop bending diagrams shall show the actual lengths of bards, to the nearest inch measured to the intersection of the extensions (tangents for bars of circular cross section) of the outside surface.

3. The shop drawing shall include bar placement diagrams which clearly indicate the dimensions of each bar splice.

4. Where mechanical couplers are required or permitted to be used to splice reinforcement steel, the CONTRACTOR shall submit manufacturer’s literature which contains written instructions and recommendations for installation capacity of each type used, and certified test reports which verify the load capacity of each type and size of coupler used, and shop drawings which show the location of each coupler with details of how they are to be installed in the formwork.

C. If reinforcement stall is spliced by welding at any location, the CONTRACTOR shall submit mill test reports which shall contain the information necessary for the determination of the carbon equivalent as specified in AWS D1.4.

1. The CONTRACTOR shall submit a written welding procedure for each type of weld for each size of bar which is to be spliced by welding; merely a statement that the AWS procedures will be followed is not acceptable.

1.04 QUALITY ASSURANCE

A. If requested by the DISTRICT ENGINEER, the CONTRACTOR shall provide samples from each heat of reinforcement steel delivered in a quantity adequate for testing. Costs of initial test will be paid by the OWNER. Costs of additional tests due to material failing initial tests shall be paid by the CONTRACTOR.

B. If reinforcement steel is spliced by welding at any location, the CONTRACTOR shall submit certifications of procedure qualifications for each welding procedure used and certification of welder qualifications, for each welding procedure and for each welder performing the work. Such qualifications shall be as specified in AWS D1.4.

C. If requested by the DISTRICT ENGINEER, the CONTRACTOR shall provide samples of each type of welded splice used in the work in a quantity and of dimensions adequate for testing. At the discretion of the DISTRICT ENGINEER, radiographic testing of direct butt-welded splices will be performed. The CONTRACTOR shall
provide assistance necessary to facilitate testing. The CONTRACTOR shall repair any weld which fails to meet the requirements of AWS D1.4. The costs of testing will be paid by the OWNER; except, the costs of all tests which fail to meet specified requirements shall be paid by the CONTRACTOR.

PART 2 PRODUCTS

2.01 MATERIAL REQUIREMENTS

A. Materials specified in this Section which may remain or leave residues on or with in the concrete shall be classified as acceptable for potable water use by the Environmental Protection Agency within 30 days of application or use.

2.02 REINFORCEMENT STEEL

A. Reinforcement Steel for all cast-in-place reinforced concrete construction shall conform to the following requirements:

1. Bar reinforcement shall conform to the requirements of ASTM A 615 for Grade 60 Billet Steel Reinforcement or as otherwise shown.

2. Welded wire fabric reinforcement shall conform to the requirements of ASTM A 185 and the details shown; provided, that welded wire fabric with longitudinal wire of W4 size wire and smaller shall be either furnished in flat sheets or in rolls with a core diameter of not less than 10 inches; and provided further, that welded wire fabric with longitudinal wires longer than W4 size shall be furnished in flat sheets only.

3. Spiral reinforcement shall be cold-drawn steel wire conforming to the requirements of ASTM A 82.

B. Accessories

1. Accessories shall include all necessary chairs, slab bolsters, concrete blocks, tie wires, dips, supports, spacers, and other devices to position reinforcement during concrete placement.
   a. All bar supports shall meet the requirements of the CRSI Manual of Standard Practice including special requirements for supporting epoxy coated reinforcing bars.
   b. Wire bard supports shall be CRSI Class 1 for maximum protection with a 1/89-inch minimum thickness of plastic coating which extends at least 1/2-inch from the concrete surface. Plastic shall be gray in color.

2. Concrete blocks (dobies), used to support and position reinforcement steel, shall have the same or higher compressive strength as specified for the concrete in which it is located. Wire ties shall be embedded in concrete block bar supports.

C. Epoxy coating for reinforcing and accessories, where specified or shown, shall conform to ASTM A 775.

2.03 MECHANICAL COUPLERS

A. Mechanical couplers shall be provided where shown and where approved by the DISTRICT ENGINEER. The couplers shall develop a tensile strength which exceed 125 percent of the yield strength of the reinforcement
bars being spliced at each splice.

B. Where the type of coupler used is composed of more than one component, all components required for a complete splice shall be supplied. This shall apply to all mechanical splices, including those splices intended for future connections.

C. The reinforcement steel and coupler used shall be compatible for obtaining the required strength of the connection. Straight threaded type couplers shall require that use of the next larger size reinforcing bar or shall be used with reinforcing bars with specially forged ends which provide upset threads which do not decrease the basic cross section of the bar.

D. Couplers shall be Lenton Form Saver as manufactured by Erico Products; Dowel Bar Splicer System as manufactured by Richmond Screw Anchor Company; or acceptable equal.

2.04 WELDED SPLICES

A. Welded splices shall be provided where shown and where approved by the DISTRICT ENGINEER. All welded splices of reinforcement steel shall develop a tensile strength which exceeds 125 percent of the yield strength of the reinforcement bars which are connected.

B. All materials required to conform the welded splices to the requirements of AWS D1.4 shall be provided.

2.05 EPOXY GROUT

A. Epoxy for grouting reinforcing bars shall be specifically formulated for such applications, for the moisture condition, application temperature, and orientation of the hole to be filled. Epoxy grout shall meet the requirements found in Section 03315 - Grout.

PART 3 EXECUTION

3.01 GENERAL

A. All reinforcement steel, welded wire fabric, couplers, and other appurtenances shall be fabricated, and placed in accordance with the requirements of the International Building Code and the supplementary requirements specified herein.

3.02 FABRICATION

A. General

1. Reinforcement steel shall be accurately formed to the dimensions and shapes shown, and fabricating details shall be prepared in accordance with ACI 315 and ACI 318, except as modified by the Drawings.
   a. Stirrups and tie bars shall be bent around a pin having a diameter not less than 1-1/2 inch for No. 3 bars, 2-inch for No. 4 bars, and 2-1/2 inch for No. 5 bars.
   b. Bends for other bars shall be made around a pin having a diameter not less than 6 times the bar diameter, except for bars larger than 1 inch, in which case the bends shall be made around a pin of 8 bar diameters.
   c. Bars shall be bent cold.

2. The CONTRACTOR shall fabricate reinforcement bars for structures in accordance with bending diagrams, placing lists, and placing drawings. Said drawings, diagrams, and lists shall be prepared by the CONTRACTOR as specified under Section 01300 - Contractor Submittals.

B. Fabricating Tolerances: Bars used for concrete reinforcement shall meet the following requirements for fabricating tolerances:

1. Sheared length; +/- 1 inch.

2. Depth of truss bars: + 0, - 1/2-inch.

3. Stirrups, ties, and spirals: +/- 1/2-inch.

4. All other bends: +/- 1 inch.

3.03 PLACING

A. Reinforcement steel shall be accurately positioned as shown, and shall be supported and wired together to prevent displacement, using annealed iron wire ties or suitable clips at intersections.

1. All reinforcement steel shall be supported by concrete, plastic or metal supports, spacers or metals hangers which are strong and rigid enough to prevent any displacement of the reinforcement steel.

2. Where concrete is to be placed on the ground, supporting concrete blocks (or dobies) shall be used, in sufficient numbers to support the bars without settlement, but in no case shall such support be continuous. All concrete blocks used to support reinforcement steel shall be tied to the steel with wire ties which are embedded in the blocks.

3. For concrete over formwork, the CONTRACTOR shall furnish concrete, metal, plastic, or other acceptable bar chairs and spacers.

B. Limitations on the use of bar support materials shall be as follows.

1. Concrete Dobies: permitted at all locations except where architectural finish is required.

2. Wire Bar Supports: permitted only at slabs over dry areas, interior dry wall surfaces, and exterior wall surfaces.

3. Plastic Bar: permitted at all locations except on grade.

C. Tie wires shall be bent away from the forms in order to provide the specified concrete coverage.

D. Bars additional to those shown which may be found necessary or desirable by the CONTRACTOR for the purpose of securing reinforcement in position shall be provided by the CONTRACTOR at its own expense.

E. Unless otherwise specified, reinforcement placing tolerances shall be within the limits specified in Section 7.5 of ACI 318, except where in conflict with the requirements of the International Building Code.

F. Bars may be moved as necessary to avoid interference with other reinforcement steel, conduits, or embedded items. If bars are moved more than one bar diameter, or enough to exceed the above tolerances, the resulting arrangement of bars shall be as acceptable to the DISTRICT ENGINEER.

G. Welded wire fabric reinforcement placed over horizontal forms shall be supported on slab bolsters. Slab bolsters shall be spaced not more than 30 inches on centers, shall extend continuously across the entire width of the reinforcement mat, and shall support the reinforcement mat in the plane shown.

H. Welded wire fabric placed over the ground shall be supported on wired concrete blocks (dobies) spaced not more than 3 feet on centers in any direction. The construction practice of placing welded wire fabric on the ground and hooking into place in the freshly placed concrete shall not be used.

I. Epoxy coated reinforcing bars shall be stored, transported, and placed in such a manner as to avoid chipping of the epoxy coating. Non-abrasive slings made of nylon and similar materials shall be used. Specially coated bar supports shall be used. All chips or cracks in the epoxy coating shall be repaired with a compatible epoxy repair material prior to placing concrete.

J. Accessories supporting reinforcing bars shall be spaced such that there is no deflection of the accessory from the weight of the supported bars. When used to space the reinforcing bars from wall forms, the forms and bars shall be located so that there is no deflection of the accessory when the forms are tightened into position.

3.04 SPACING OF BARS

A. The clear distance between parallel bars (except in columns and between multiple layers of bars in beams) shall be not less than the nominal diameter of the bars nor less than 1-1/3 times the maximum size of the coarse aggregate, nor less than one inch.

B. Where reinforcement in beams or girders is placed in 2 or more layers, the clear distance between layers shall be not less than one inch.

C. In columns, the clear distance between longitudinal bars shall be not less than 1-1/2 times the bar diameter, nor less than 1-1/2 times the maximum size of the coarse aggregate, nor less than 1-1/2 inches.

D. The clear distance between bars shall also apply to the distance between a contact splice and adjacent splices or bars.

3.05 SPLICING

A. General

1. Reinforcement bar splices shall only be used at locations shown. When it is necessary to splice reinforcement at points other than where shown, the character of the splice shall be as acceptable to the DISTRICT ENGINEER.

2. Unless otherwise indicated, dowels shall match the size and spacing of the spliced bar.

B. Splices of Reinforcement

1. The length of lap for reinforcement bars, unless otherwise shown shall be in accordance with ACI 318-89, Section 12.15.1 for a Class B splice.

2. Laps of welded wire fabric shall be in accordance with the ACI 318. Adjoining sheets shall be securely tied together with No. 14 tie wire, one tie for each 2 running feet. Wires shall be staggered and tied in such a manner that they cannot slip.

3. Splices in column spiral reinforcement, when necessary, shall be made by welding or by a lap of1-1/2 turns.

C. Bending or Straightening

1. Reinforcement shall not be straightened or rebent in a manner which will injure the material. Bars with kinks or bends not shown shall not be used. All bars shall be bent cold, unless otherwise permitted by the DISTRICT ENGINEER. No bars partially embedded in concrete shall be field-bent except as shown or specifically permitted by the DISTRICT ENGINEER.

D. Couplers which are located at a joint face shall be a type which can be set either flush or recessed from the face as shown. The couplers shall be sealed during concrete placement to completely eliminate concrete or cement paste from entering. Couplers intended for future connections shall be recessed a minimum of 1/2-inch from the concrete surface. After the concrete is placed, the coupler shall be plugged with plastic

plugs which have an O-ring seal and the recess filled with sealant to prevent any contact with water or other corrosive materials. Threaded couplers shall be plugged.

E. Unless noted otherwise, mechanical coupler spacing and capacity shall match the spacing and capacity of the reinforcing shown for the adjacent section.

3.06 CLEANING AND PROTECTION

A. Reinforcement steel shall be protected, at all times, from conditions conducive to corrosion until concrete is placed around it.

B. The surfaces of all reinforcement steel and other metalwork to be in contact with concrete shall be thoroughly cleaned of all dirt, grease, loose scale and rust, grout, mortar and other foreign substances immediately before the concrete is placed. Where there is delay in depositing concrete, reinforcement shall be re-inspected and, if necessary re-cleaned.

3.07 EMBEDMENT OF DRILLED REINFORCING STEEL DOWELS

A. Hole Preparation

1. The hole diameter shall be as recommended by the epoxy manufacturer but shall be no larger than 0.25 inch greater than the diameter of the outer surface of the reinforcing bar deformations.

2. The depth of the hole shall be as recommended by the epoxy manufacturer to fully develop the bar; but shall not be less than 12 bar diameters, unless noted otherwise.

3. The hole shall be drilled by methods which do not interfere with the proper bonding of epoxy.

4. Existing reinforcing steel in the vicinity of proposed holes shall be located prior to drilling. The location of holes to be drilled shall be adjusted to avoid drilling through or nicking any existing reinforcing bars.

5. The hole shall be blown clean with clean, dry compressed air to remove all dust and loose particles.

6. Epoxy shall be injected into the hole through a tube placed to the bottom of the hole. The tube shall be withdrawn as epoxy is placed but kept immersed to prevent formation of air pockets. The hole shall be filled to a depth that ensures that excess material will be expelled from the hole during dowel placement.

7. Dowels shall be twisted during insertion into the partially filled hole so as to guarantee full wetting of the bar surface with epoxy. The bar shall be inserted slowly enough to avoid developing air pockets.

END OF SECTION

SECTION 03290

JOINTS IN CONCRETE

PART 1 GENERAL

1.01 REQUIREMENTS

A. The CONTRACTOR shall construct all joints in concrete at the locations indicated on the drawings. Joints required in concrete structures are of various types and will be permitted only where shown, unless specifically accepted by the DISTRICT ENGINEER.

1.02 REFERENCE SPECIFICATIONS, CODES AND STANDARDS

A. Federal Specifications:

1. TT-S-0227E (3) Sealing Compound, elastomeric type, Multi-component for Caulking, Sealing, and Glazing Buildings and Other Structures.

B. U.S. Army Corps of Engineers Specifications:

1. CRD-C572PVC Waterstop.

C. Commercial Standards:

1. ASTM A 775 Specification for Epoxy-Coated Reinforcing Steel Bars
2. ASTM C 920 Specification for Elastomeric Joint Sealants
3. ASTM D 412 Test Methods for Rubber Properties in Tension
4. ASTM D 624 Test Method for Rubber Property – Tear Resistance
5. ASTM D 638 Test Method for Tensile Properties of Plastics
6. ASTM D 746 Test Methods for Brittleness Temperature of Plastics and Elastomers by Impact
7. ASTM D 747 Test Method for Apparent Bending Modulus of Plastics by Means of a Cantilever Beam
8. ASTM D 1056 Specifications for Flexible Cellular Materials – Sponge or Expanded Rubber
9. ASTM D 1752 Specifications for Preformed Sponge Rubber and Cork Expansion Joint Fillers for Concrete Paving and Structural Construction
10. ASTM D 2240 Test Method for Rubber Property – Durometer Hardness
11. ASTM D 2241 Specification for Poly (Vinyl Chloride) (PVC) Pressure-Rated Pipe (SDR-Series)
12. Use the latest edition of the above reference standards as of the date of the project.

1.03 TYPES OF JOINTS

A. Construction Joints: When fresh concrete is placed against a hardened concrete surface, the joint between the two pours are called a construction joint.

1. Unless otherwise specified, all joints in water bearing members shall be provided with a waterstop and/or sealant groove of the shape specified and shown.

2. The surface of the first pour may also be required to receive a coating of bond breaker as shown.

B. Contraction Joints: Contraction joints are similar to construction joints except that the fresh concrete shall not bond to the hardened surface of the first pour, which shall be coated with a bond breaker.

1. The slab reinforcement shall be stopped 4-1/2 inches from the joint; which is provided with a sleeve-type dowel, to allow shrinkage of the concrete of the second pour.

2. Waterstop and/or sealant groove shall also be provided when specified or shown.

C. Expansion Joints: To allow the concrete to expand freely, a space is provided between the two pours; the joint shall be formed as indicated.

1. This space is obtained by placing a filler joint material against the first pour, which acts as a form for the second pour.

2. Unless otherwise specified, all expansion joints in water bearing members shall be provided with a center-bulb type waterstop as shown.

3. Premolded expansion joint material shall be installed with the edge at the indicated distance below or back from finished concrete surface; and shall have a slightly tapered, dressed, and oiled wood strip secured to or placed at the edge thereof during concrete placement, which shall later be removed to form space for sealing material.

4. The space so formed shall be filled with a joint sealant material as specified in the Paragraph in Part 2 entitled “Joint Sealant”. In order to keep the two wall or slab elements in line, the joint shall also be provided with a sleeve-type dowel as shown.

D. Control Joints: The function of the control joint is to provide a weaker plane in the concrete, where shrinkage cracks will probably occur.

1. A groove, of the shape and dimensions shown, shall be formed or saw-cut in the concrete.

2. The groove shall be filled afterward with a joint sealant material as specified in the Paragraph in Part 2 entitled “Joint Sealant”.

1.04 CONTRACTOR SUBMITTALS

A. Waterstops: Prior to production of the material required under this contract, qualification samples shall be submitted. Such samples shall consist of extruded or molded sections of each size or shape to be used, and shall be accomplished so that the material and workmanship represent, in all respects, the material to be furnished under this contract. The balance of the material to be used under this contract shall not be produced until after the DISTRICT ENGINEER has reviewed the qualification samples.

B. Joint Sealant: Prior to ordering the sealant material, the CONTRACTOR shall submit to the DISTRICT ENGINEER for the DISTRICT ENGINEER’s review, sufficient data to show general compliance with the requirements of the Contract Documents.

C. Certified test reports from the sealant manufacturer on the actual batch of material being supplied indicating compliance with the above requirements shall be furnished the CIYT ENGINEER before the sealant is used on the job.

D. Shipping Certification: The CONTRACTOR shall provide written certification from the manufacturer as an integral part of the shipping form, to show that all of the material shipped to this project meets or exceeds the physical property requirements of the Contract Documents. Supplier certificates are not acceptable.

E. Joint Location: The CONTRACTOR shall submit placement shop drawings showing the location and type of all joints for each structure.

1.05 QUALITY ASSURANCE

A. Waterstop Inspection: It is required that all waterstop field joints shall be subject to rigid inspection, and no such work shall be scheduled or started without having made prior arrangements with the DISTRICT ENGINEER to provide for the required inspections. Not less than 24 hours' notice shall be provided to the DISTRICT ENGINEER for scheduling such inspections.

B. All field joints in waterstops shall be subject to rigid inspection for misalignment, bubbles, inadequate bond, porosity, cracks, offsets, and other defects which would reduce the potential resistance of the material to water pressure at any point. All defective joints shall be replaced with material which shall pass said inspection, and all faulty material shall be removed from the site and disposed of by the CONTRACTOR at its own expense.

C. The following waterstop defects represent a partial list of defects which shall be grounds for rejection:

1. Offsets at joints greater than 1/16-inch or 15 percent of material thickness, at any point, whichever is less.

2. Exterior crack at joint, due to incomplete bond, which is deeper than 1/16-inch or 15 percent of material thickness, at any point, whichever is less.

3. Any combination of offset or exterior crack which will result in a net reduction in the cross section of the waterstop in excess of 1/16-inch or 15 percent of material thickness at any point, whichever is less.

4. Misalignment of joint which result in misalignment of the waterstop in excess of 1/2-inch in 10 feet.

5. Porosity in the welded joint as evidenced by visual inspection.

6. Bubbles or inadequate bonding which can be detected with a penknife test. (If, while prodding the entire joint with the point of a penknife, the knife breaks through the outer portion of the weld into a bubble, the joint shall be considered defective.)

D. Waterstop samples: Prior to use of the waterstop material in the field, a sample of a fabricated mitered cross and a tee constructed of each size or shape of material to be used shall be submitted to the DISTRICT ENGINEER for review.

1. These samples shall be fabricated so that the material and workmanship represent in all respects the fittings to be furnished under this contract.

2. Field samples of fabricated fittings (crosses, tees, etc.) will be selected at random by the DISTRICT ENGINEER for testing by a laboratory at the OWNER's expense. When tested, they shall have a tensile strength across the joints equal to at least 600 psi.

E. Construction Joint Sealant: The CONTRACTOR shall prepare adhesion and cohesion test specimens as specified herein, at intervals of 5 working days while sealants are being installed.

F. The sealant material shall show no signs of adhesive or cohesive failure when tested in accordance with the following procedure in laboratory and field tests:

1. Sealant specimen shall be prepared between 2 concrete blocks (1-inch by 2-inch by 3-inch). Spacing between the blocks shall be 1-inch. Coated spacers (2-inch by 1-1/2-inch by 1/2-inch) shall be used to insure sealant cross-sections of 1/2-inch by 2 inches with a width of 1-inch.

2. Sealant shall be cast and cured according to manufacturer's recommendations, except that curing period shall be not less than 24 hours.

3. Following curing period, the gap between blocks shall be widened to 1-1/2-inch. Spacers shall be used to maintain this gap for 24 hours prior to inspection for failure.

1.06 GUARANTEE

A. The CONTRACTOR shall provide a 5-year written guarantee of the entire sealant installation against faulty and/or incompatible materials and workmanship, together with a statement that it agrees to repair or replace, to the satisfaction of the OWNER, at no additional cost to the OWNER, any such defective areas which become evident within said 5-year guarantee period.

PART 2 PRODUCTS

2.01 GENERAL

A. All Joint materials specified herein shall be classified as acceptable for potable water use, by the Environmental Protection Agency, within 30 days of application.

2.02 PVC WATERSTOPS

A. General: Waterstops shall be extruded from an elastomeric polyvinyl chloride compound containing the plasticizers, resins, stabilizers, and other materials necessary to meet the requirements of these Specifications. No reclaimed or scrap material shall be used. The CONTRACTOR shall obtain from the waterstop manufacturer and shall furnish to the DISTRICT ENGINEER for review, current test reports and a written certification of the manufacturer that the material to be shipped to the job meets the physical requirements as outlined in the U. S. Army Corps of Engineers Specification CRD-C572 and those listed herein.

B. Flatstrip and Center Bulb Waterstops: Flatstrip and center bulb waterstops shall be as detailed and as manufactured by Greenstreak Plastic Products Co., St. Louis, Missouri or acceptable equal; provided, that at no place shall the thickness of flat strip waterstops, including the center bulb type, be less than 3/8 inch.

C. Multi Rib Waterstops: Multi rib waterstops, where required, shall be as detailed and as manufactured by Greenstreak Plastic Products Co., St. Louis, Missouri or acceptable equal. Prefabricated joint fittings shall be used at all intersections of the ribbed type waterstops.

D. Other types of Waterstops: When other types of waterstops, not listed above, are required and shown, they shall be subjected to the same requirements as those listed herein.

E. Waterstop Testing Requirements: When tested in accordance with the specified test standards, the waterstop material shall meet or exceed the following requirements:

1. Physical Property, Sheet Material	Value	ASTM Standard
Tensile Strength-min (psi)	1750	D 638, Type IV
Ultimate Elongation-min (percent)	350	D 638, Type IV
Low Temp Brittleness-max (degrees F)	-35	D 746
Stiffness in Flexure-min (psi)	400	D 747
2. Accelerated Extraction (CRD-C572)		
Tensile Strength-min (psi)	1500	D 638, Type IV
Ultimate Elongation-min (percent)	300	D 638, Type IV
3. Effect of Alkalies (CRD-C572)		
Change in Weight (percent)	+0.25/-0.10	-------
Change in Durometer, Shore A	+5	D 2240
4. Finish Waterstop		
Tensile Strength-min (psi)	1400	D 638, Type IV

Ultimate Elongation-min (percent)	280	D 638, Type IV

2.03 JOINT SEALANT

A. Joint sealant shall be polyurethane polymer designed for bonding to concrete which is continuously submerged in water. No material will be acceptable which has an unsatisfactory history as to bond or durability when used in the joints of water retaining structures.

B. Joint sealant material shall meet the following requirements. (73 degrees F and 50 percent R. H.):

1.	Work Life	45 – 180 minutes
2.	Time to Reach 20 Shore "A" Hardness (At 77 degrees F, 200 gr quantity)	24 hours, maximum
3.	Ultimate Hardness (ASTM D2240	20-45 Shore "A"
4.	Tensile Strength (ASTM D 412)	200 psi, minimum
5.	Ultimate Elongation (ASTM D 412)	400 percent, minimum
6.	Tear Resistance (Die C ASTM D 624)	75 pounds per inch of thickness, minimum
7.	Color	Light Gray

C. All polyurethane sealants for waterstop joints in concrete shall conform to the following requirements:

1. Sealant shall be 2-part polyurethane with the physical properties of the cured sealant conforming to or exceeding the requirements of ANSI/ASTM C 920 or Federal Specification TT-S-0227 E (3) for 2 part material, as applicable.

2. For vertical joints and overhead horizontal joints, only "non-sag" compounds shall be used; all such compounds shall conform to the requirements of ANSI/ASTM C920 Class 25, Grade NS, or Federal Specification TT-S-0227 E (3), Type II, Class A.

3. For plane horizontal joints, the self-leveling compounds which meet the requirements of ANSI/ASTM C 920 Class 25, Grade P, or Federal Specification TT-S-0227 E93, Type I shall be used. For joints subject to either pedestrian or vehicular traffic, a compound providing non-tracking characteristics, and having a Shore "A" hardness range of 35 to 45, shall be used.

4. Primer materials, if recommended by the sealant manufacturer, shall conform to the printed instructions and recommendations of the sealant manufacturer.

D. All sealants, wherever shown or required hereunder, shall be PSI-270 as manufactured by Polymeric Systems Inc.; Elastothane 227R as manufactured by Pacific Polymers; Sikaflex 2C, as manufactured by Sika Corporation; or acceptable equal.

2.04 JOINT MATERIALS

A. Neoprene Bearing Pad: Neoprene bearing pads shall be of the dimensions and hardness shown on the drawings, and shall be manufactured by an acceptable manufacturer. Bearing pad shall be neoprene conforming to ASTM D 2000 BC 420, 40 durometer hardness, unless otherwise noted.

B. Closed Cell Neoprene Pad: Closed cell neoprene pads shall be used as a filler material in the flexible joint between the wall and roof connection in the areas not taken up by the solid neoprene bearing pads.

1. Closed cell neoprene shall be ordered at least 1/4-inch wider than theoretically required to facilitate placing and to reduce development of voids between filler pads and bearing pads.

2. The material shall be medium grade closed cell neoprene conforming to 2A3 of ASTM D-1056-85 and as further specified in the table below and on the drawings. (NOTE: Rubatex 431N or R423N, or approved equal, are acceptable materials).

CLOSED CELL NEOPRENE PAD SPECIFICATIONS Temperature Range:	
Low (Flex Without cracking)	-30° F
High continuous	150° F
High Intermittent	200° F
Heat Aging (7 days @ 158° F) Lineal Shrinkage, max	5%
Tensile Strength	115 PSI (min)
Elongation	180% (min)
Resilience (Bayshore-% Rebound Average ½ inch Thickness @ 72° F	20 % - 40%

C All voids around bearing pads and cavities between bearing and filler pads, whether these voids and cavities are large or small, shall be filled with soft mastic.

1. The mastic material shall be installed at a consistency that will not adversely affect the quality of PVC and neoprene materials.

2. The CONTRACTOR'S workmanship shall be such that no cement grout or concrete seepage will occur through the bearing and fills pad areas.

3. Acceptable materials are SIKAFLEX 1A as manufactured by Sika Corporation or Select Seal U-230, as Manufactured by Select Products Company, or acceptable equals.

D. Bearing and filler pads shall be installed as shown on the drawings.

1. They shall be glued to the concrete with an acceptable rubber cement to prevent uplift of the pads during concrete placement.

2. In addition, all pads shall be held down with approved plastic shim plates placed under the reinforcing steel.

3. Nailing pads in place will not be permitted.

E. Joint Filler:

1. Joint filler for expansion joints in water holding structures shall be neoprene conforming to ASTM D1056.

2. Joint filler material in other locations shall be of the preformed non-extruding type joint filler constructed of cellular neoprene sponge rubber or polyurethane of form texture.

3. Bituminous fiber type will not be permitted.

4. All non-extruding and resilient-type preformed expansion joint fillers shall conform to the requirements and tests set forth in ASTM D 1752 for Type I, except as otherwise specified herein.

2.05 BACKING ROD

A. Backing rod shall be an extruded closed-cell, polyethylene foam rod. The material shall be compatible with the joint sealant material used and shall have a tensile strength of not less than 40 psi and a compression deflection of approximately 25 percent at 8 psi. The rod shall be 1/8 inch larger in diameter than the joint width, except that a one-inch diameter rod shall be used for a 3/4-inch wide joint.

2.06 BOND BREAKER

A. Bond breaker shall be Super Bond Breaker as manufactured by Burke Company, San Mateo, California; Select Cure CRB as manufactured by Select Products Co., Upland, California; or acceptable equal. It shall contain a fugitive dye so that areas of application will be readily distinguishable.

2.07 SLIP DOWELS

A. Slip dowels in joints shall be A36 smooth epoxy-coated bars, conforming to ASTM A 775.

2.08 PVC TUBING

PVC tubing in joints shall be Sch. SDR 13.5, conforming to ASTM D 2241.

PART 3 EXECUTION

3.01 GENERAL

A. Waterstops of the type specified herein shall be embedded in the concrete across joints as shown. All waterstops shall be fully continuous for the extent of the joint. Splices necessary to provide such continuity shall be accomplished in conformance to printed instructions of manufacturer of the waterstops. The CONTRACTOR shall take suitable precautions and means to support and protect the waterstops during the progress of the work and shall repair or replace at its own expense any waterstops damaged during the progress of the work. All waterstops shall be stored so as to permit free circulation of air around the waterstop material.

B. When any waterstop is installed in the concrete on one side of a joint, while the other half or portion of the waterstop remains exposed to the atmosphere for more than 2 days, suitable precautions shall be taken to shade and protect the exposed waterstop from direct rays of the sun during the entire exposure and until the exposed portion of the waterstop is embedded in concrete.

3.02 SPLICES IN WATERSTOPS

A. Splices in waterstops shall be performed by heat sealing the adjacent waterstop sections in accordance with the manufacturer's printed instructions and recommendations. It is essential that:

1. The material not be damaged by heat sealing.

2. The splices have a tensile strength of not less than 60 percent of the unspliced material's tensile strength.

3. The continuity of the waterstop ribs and of its tubular center axis be maintained.

B. Butt joints of the ends of two identical waterstop sections may be made while the material is in the forms.

C. All joints with waterstops involving more than two ends to be jointed together, and all joints which involve an angle cut, alignment change, or the joint of two dissimilar waterstop sections shall be prefabricated by the CONTRACTOR prior to placement in the forms; allowing not less than 24-inch-long strips of waterstop

material beyond the joint. Upon being inspected and accepted, such prefabricated waterstop joint assemblies shall be installed in the forms and the ends of the 24-inch strip shall be butt welded to the straight run portions of waterstop in place in the forms.

D. Where a centerbulb waterstop intersects and is jointed with a non-centerbulb waterstop, care shall be taken to seal the end of the centerbulb, using additional PVC material if needed.

3.03 JOINT CONSTRUCTION

A. Setting Waterstops: In order to eliminate faulty installation that may result in joint leakage, particular care shall be taken of the correct positioning of the waterstops during installation.

1. Adequate provisions must be made to support and anchor the waterstops during the progress of the WORK and to insure the proper embedment in the concrete.

2. The symmetrical halves of the waterstops shall be equally divided between the concrete pours at the joints. The center axis of the waterstops shall be coincident with the joint openings.

3. Maximum density and imperviousness of the concrete shall be insured by thoroughly working it in the vicinity of all joints.

B. In placing flat-strip waterstops in the forms, means shall be provided to prevent them from being folded over by the concrete as it is placed.

1. Unless otherwise shown, all waterstops shall be held in place with light wire ties on 12-inch centers which shall be passed through the edge of the waterstop and tied to the curtain of reinforcing steel.

2. Horizontal waterstops, with their flat face in a vertical plane, shall be held in place with continuous supports to which the top edge of the waterstop shall be tacked. In placing concrete around horizontal waterstops, with their flat face in a horizontal plane, concrete shall be worked under the waterstops by hand so as to avoid the formation of air and rock pockets.

C. In placing centerbulb waterstops in expansion joints, the centerbulb shall be centered on the joint filler material.

D. Waterstop in vertical wall joints shall stop 6 inches from the top of the wall where such waterstop does not connect with any other waterstop and is not to be connected to for a future concrete placement.

E. Joint Location: Construction joints, and other types of joints, shall be provided where shown. When not shown, construction joints shall be provided at 60 foot maximum spacing for all concrete construction, unless noted otherwise. The location of all joints, of any type, shall be submitted for acceptance by the DISTRICT ENGINEER.

F. Joint Preparation: Special care shall be used in preparing concrete surfaces at joints where bonding between two sections of concrete is required. Unless otherwise shown, such bonding will be required at all horizontal joints in walls.

1. Surfaces shall be prepared in accordance with the requirements of Section 03300 - Cast-in-Place Concrete.

2. Except on horizontal wall construction joints, wall to slab joints or where otherwise shown or specified, at all joints where waterstops are required, the joint face of the first pour shall be coated with a bond breaker as specified herein.

G. Construction Joint Sealant: Construction joints in water-bearing floor slabs, and elsewhere as shown, shall be provided with tapered grooves which shall be filled with a construction joint sealant.

1. The material used for forming the tapered grooves shall be left in the grooves until just before the grooves are cleaned and filled with joint sealant.

2. After removing the forms from the groves, all laitance and fins shall be removed, and the groves shall

be sand-blasted.

3. The grooves shall be allowed to become thoroughly dry, after which they shall be blown out; immediately thereafter, they shall be primed, bond breaker tape placed in the bottom of the groove, and filled with the construction joint sealant.

4. The primer used shall be supplied by the same manufacturer supplying the sealant. No sealant will be permitted to be used without a primer.

5. Care shall be used to completely fill the sealant grooves.

6. Areas designated to receive a sealant fillet shall be thoroughly cleaned, as outlined for the tapered grooves, prior to application of the sealant.

H. The primer and sealant shall be placed strictly in accordance with the printed instructions and recommendations of the manufacturer, taking special care to properly mix the sealant prior to application. The sides of the sealant groove shall not be coated with bond breaker, curing compound, or any other substance which would interfere with proper bonding of the sealant. All sealant shall achieve final cure at least 7 days before the structure is filled with water.

I. All sealant shall be installed by a competent waterproofing specialty contractor who has a successful record of performance in similar installations. Before work is commenced, the crew doing the WORK shall be instructed as to the proper method of application by a representative or the sealant manufacturer.

J. Thorough, uniform mixing of 2-part, catalyst-cured materials is essential; special care shall be taken to properly mix the sealer before its application. Before any sealer is placed, the CONTRACTOR shall arrange to have the crew doing the WORK carefully instructed as to the proper method of mixing and application by a representative of the sealant manufacturer.

K. Any joint sealant which, after the manufacturer's recommended curing time for the job conditions of the WORK hereunder, fails to fully and properly cure shall be completely removed; the groove shall be thoroughly sandblasted to remove all traces of the uncured or partially cured sealant and primer, and shall be re-sealed with the specified joint sealant. All costs of such removal, joint treatment, re-sealing, and appurtenant work shall be at the expense of the CONTRACTOR.

END OF SECTION

SECTION 03300

CAST-IN-PLACE CONCRETE

PART 1 GENERAL

1.01 SECTION INCLUDES

A. Concrete form work.

B. Floors and slabs on grade.

C. Concrete foundation walls and vaults.

D. Concrete reinforcement.

E. Joint devices associated with concrete work.

F. Miscellaneous concrete elements, including equipment pads, thrust blocks, and other miscellaneous items.

G. Concrete curing.

1.02 MEASUREMENT AND PAYMENT

A. See Section 01270 - Unit Prices, for additional unit price requirements.

B. Concrete for Miscellaneous Structures.

1. Basis for Measurement: concrete and reinforcement for miscellaneous structures and other work shall be made and included in the unit price and lump sum price bid for the miscellaneous items of work.

2. Basis for Payment: Includes form work, reinforcement, concrete, placement, accessories, consolidating and leveling, curing and finishing.

C. Concrete - Grouting.

1. Basis for Measurement: grouting for miscellaneous structures and other work shall be made and included in the unit price and lump sum price bid for the miscellaneous items of work.

2. Basis for Payment: Includes preparation of substrate, grout, placement, consolidating, troweling, and curing.

1.03 REFERENCES

A. ACI 211.1 - Standard Practice for Selecting Proportions for Normal, Heavyweight, and Mass Concrete; American Concrete Institute International.

B. ACI 301 - Specifications for Structural Concrete for Buildings; American Concrete Institute International.

C. ACI 304R - Guide for Measuring, Mixing, Transporting, and Placing Concrete; American Concrete Institute International.

D. ACI 305R - Hot Weather Concreting; American Concrete Institute International.

E. ACI 306R - Cold Weather Concreting; American Concrete Institute International.

F. ACI 308 - Standard Practice for Curing Concrete; American Concrete Institute International.

G. ACI 309R - Guide for Consolidation of Concrete; American Concrete Institute.

H. ACI 318 - Building Code Requirements for Reinforced Concrete and Commentary; American Concrete Institute International.

I. ACI 347 - Guide to Form work for Concrete; American Concrete Institute.

J. ASTM A 185 - Standard Specification for Steel Welded Wire Fabric, Plain, for Concrete Reinforcement.

K. ASTM A 615/A 615M - Standard Specification for Deformed and Plain Billet-Steel Bars for Concrete Reinforcement.

L. ASTM C 31 - Standard Practice for Making and Curing Concrete Test Specimens in the Field.

M. ASTM C 33 - Standard Specification for Concrete Aggregates.

N. ASTM C 39 - Standard Test Method for Compressive Strength of Cylindrical Concrete Specimens.

O. ASTM C 94 - Standard Specification for Ready-Mixed Concrete.

P. ASTM C 143 - Standard Test Method for Slump of Hydraulic Cement Concrete.

Q. ASTM C 150 - Standard Specification for Portland Cement.

R. ASTM C 171 - Standard Specification for Sheet Materials for Curing Concrete.

S. ASTM C 173 - Standard Test Method for Air Content of Freshly Mixed Concrete by the Volumetric Method.

T. ASTM C 260 - Standard Specification for Air-Entraining Admixtures for Concrete.

U. ASTM C 309 - Standard Specification for Liquid Membrane-Forming Compounds for Curing Concrete.

V. ASTM C 494 - Standard Specification for Chemical Admixtures for Concrete.

W. ASTM C 618 - Standard Specification for Coal Fly Ash and Raw or Calcined Natural Pozzolan for Use as a Mineral Admixture in Concrete.

X. ASTM C 881 - Standard Specification for Epoxy-Resin-Base Bonding Systems for Concrete.

Y. ASTM C 1107 - Standard Specification for Packaged Dry, Hydraulic-Cement Grout (Nonshrink).

Z. ASTM C 1116 - Standard Specification for Fiber-Reinforced Concrete and Shotcrete.

AA. ASTM D 994 - Standard Specification for Preformed Expansion Joint Filler for Concrete (Bituminous Type).

AB. ASTM D 1751 - Standard Specification for Preformed Expansion Joint Filler for Concrete Paving and Structural Construction (Nonextruding and Resilient Bituminous Types).

AC. COE CRD-C 572 - Corps of Engineers Specifications for Polyvinyl chloride Waterstop; Corps of Engineers.

1.04 SUBMITTALS

A. See Section 01300 - Administrative Requirements, for submittal procedures.

B. Product Data: Submit manufacturers' data on manufactured products.

C. Samples: Submit one, four-inch-long samples of water stops and construction joint devices, as directed.

D. Manufacturer's Installation Instructions: Indicate installation procedures and interface required with adjacent construction for concrete accessories.

E. Project Record Documents: Accurately record actual locations of embedded utilities and components that will be concealed from view upon completion of concrete work.

1.05 QUALITY ASSURANCE

A. Perform work of this section in accordance with ACI 301 and ACI 318.

B. Acquire cement from same source and aggregate from same source for entire project.

C. Follow recommendations of ACI 305R when concreting during hot weather.

D. Follow recommendations of ACI 306R when concreting during cold weather.

PART 2 PRODUCTS

2.01 FORM WORK

A. Form Materials: Contractor 's choice of standard products with sufficient strength to withstand hydrostatic head without distortion in excess of permitted tolerances.

1. Form Facing for Exposed Finish Concrete: Contractor 's choice of materials that will provide smooth, stain-free final appearance.

2. Form Coating: Release agent that will not adversely affect concrete or interfere with application of coatings.

3. Form Ties: Snap-Off type that will leave no metal within 1-1/2 inches of concrete surface. Use of tie wire as form ties will not be permitted.

2.02 REINFORCEMENT

A. Reinforcing Steel: ASTM A 615/A 615M Grade 60 (420).

1. Deformed billet-steel bars.

2. Unfinished.

B. Welded Steel Wire Fabric: ASTM A 185, plain type.

1. Coiled Rolls or flat sheets.

2. Mesh Size and Wire Gage: As indicated on drawings.

C. Reinforcement Accessories:

1. Tie Wire: Annealed, minimum 16 gage.

2. Chairs, Bolsters, Bar Supports, Spacers: Sized and shaped for adequate support of reinforcement during concrete placement.

3. Provide galvanized or plastic-coated steel components for placement within 1-1/2 inches of weathering surfaces.

2.03 CONCRETE MATERIALS

A. Cement: ASTM C 150, Type IIA - Air Entraining Portland type.

B. Cement: ASTM C 150, Type V - Sulfate Resistant Portland type. when exposed to sewage.

C. Fine and Coarse Aggregates: ASTM C 33.

D. Fly Ash: ASTM C 618, Class F.

E. Calcined Pozzolan: ASTM C 618, Class N.

F. Water: Clean and not detrimental to concrete.

G. Synthetic Fiber Reinforcement: Comply with ASTM C 1116; 1/2-inch length.

2.04 ADMIXTURES

All admixtures shall be compatible and by single manufacturer capable of providing qualified field service representation. Admixtures shall be used in accordance with manufacturer's recommendations. If the use of an admixture is producing an inferior end result, the CONTRACTOR shall discontinue use of the admixture. Admixtures shall not contain thiocyanates nor more than 0.05 percent chloride ion, and shall be non-toxic after 30 days.

A. Air-entraining agent meeting the requirements of ASTM C 260, shall be used. Sufficient air entraining agent shall be used to provide a total air content of 5 to 7 percent. The OWNER reserves the right, at any time, to sample and test the air-entraining agent received on the job by the CONTRACTOR. The air-entraining agent shall be added to the batch in a portion of the mixing water. The solution shall be batched by means of a mechanical batcher capable of accurate measurement. Air content shall be tested at the point of placement. Air entraining agent shall be Micro-Air by Master Builder; Daravair by W. R. Grace; Sika AEA-15 by Sika Corporation; or acceptable equal.
B. Waterproofing admixture shall be shall be added at a rate of 2% by weight of Portland Cement in addition to other admixtures in the final concrete mix design. Admixture to be added to the concrete at the time of batching. A factory certified technician must supervise the admix operation at the batch plant to ensure quality control and approve warranties. Set controlling or water reducing admixtures as described below must be approved by the waterproofing admixture manufacturer. Waterproofing admixture shall be XYPEX Admix C-1000/C-2000; or acceptable equal.
C. Set controlling and water reducing admixtures: Admixtures may be added at the CONTRACTOR'S option to control the set, effect water reduction, and increase workability. The addition of an admixture shall be at the CONTRACTOR'S expense. The use of an admixture shall be subject to acceptance by PACIFICORP. Concrete containing an admixture shall be first placed at a location determined by PACIFICORP. Admixtures specified herein shall conform to the requirements of ASTM C 494. The required quality of cement shall be used in the mix regardless of whether or not an admixture is used.

(1) Concrete shall not contain more than one water reducing admixture. Concrete containing an admixture shall be first placed at a location determined by Owner.

(2) Set controlling admixture shall be either with or without water-reducing properties. Where the air temperature at the time of placement is expected to be consistently over 80 degrees F, a set retarding admixture such as Plastocrete by Sika Corporation; Pozzolith 300R by Master Builders; Daratard by W. R. Grace; or acceptable equal shall be used. Where the air temperature at the time of placement is expected to be consistently under 40 degrees F, a non-corrosive set accelerating admixture such as Plastocrete 161FL by Sika Corporation; Pozzutec 20 by Master Builders; Daraset by W. R. Grace; or acceptable equal shall be used.

(3) Normal range water reducer shall conform to ASTM C 494, Type A. WRDA 79 by W. R. Grace; Pozzolith 322-N by Master Builders; Plastocrete 161 by Sika Corporation; or acceptable equal. The quantity of admixture used and the method of mixing shall be in accordance with the Manufacturer's written instructions and recommendations.

(4) High range water reducer shall conform to ASTM C 494, Type F or G. Daracem 100 or WDRA 19 by W.R. Grace; Sikament FF or Sikament 86 by Sika Corporation; Rheobuild 1000 or Rheobuild 716 by Master Builders; or acceptable equal. High range water reducer shall be added to the concrete after all other ingredients have been mixed and initial slump has been verified. No more than 14 ounces of water reducer per sack of cement shall be used. Water reducer shall be considered as part of the mixing water when calculating water cement ratio.

(5) If the high range water reducer is added to the concrete at the job site, it may be used in conjunction with the same water reducer added at the batch plant. Concrete shall have a slump of 3 inches +/- 1/2-inch prior to adding the high range water reducing admixture at the job site. The high range water reducing admixture shall be accurately measured and pressure injected into the mixer as a single dose by an experienced technician. A standby system shall be provided and tested prior to each day's operation of the job site system.

(6) Concrete shall be mixed at mixing speed for a minimum of 30 mixer revolutions after the addition of the high range water reducer.

(7) Flyash: Flyash shall not be used.

D. The use of Chlorides is prohibited.

2.05 CONCRETE ACCESSORIES

A. Epoxy Bonding System: ASTM C 881, type as required by project conditions.

B. Non-Shrink Grout: ASTM C 1107; premixed compound consisting of non-metallic aggregate, cement, water reducing and plasticizing agents.

1. Minimum Compressive Strength at 48 Hours: 2,400 psi.

2. Minimum Compressive Strength at 28 Days: 7,000 psi.

C. Moisture-Retaining Cover: ASTM C 171; clear polyethylene or white burlap-polyethylene sheet.

D. Liquid Curing Compound: ASTM C 309, Type 1, clear or translucent.

2.06 JOINT DEVICES AND MATERIALS

A. Waterstops: PVC type, COE CRD-C 572.

B. Joint Filler: ASTM D 1751; Asphalt impregnated fiberboard or felt, 1/2 inch thick; tongue and groove profile.

2.07 CONCRETE MIX DESIGN

A. Proportioning Normal Weight Concrete: Comply with ACI 211.1 recommendations.

B. Admixtures: Add acceptable admixtures as recommended in ACI 211.1 and at rates recommended by manufacturer.

C. Fibrous Reinforcement: Where indicated, add to mix at rate of 1.5 pounds per cubic yard, or as recommended by manufacturer for specific project conditions.

D. Normal Weight Concrete:

1. Compressive Strength, per ASTM C 39 at 28 days: 4,000 psi.

2. Fly Ash Content: Maximum 15 percent of cementitious materials by weight.

3. Calcined Pozzolan Content: Maximum 10 percent of cementitious materials by weight.

4. Cement Content: Minimum 592.2 lb per cubic yard; 6.3 bag mix.
5. Water-Cement Ratio: Maximum 48 percent by weight.

6. Total Air Content: 4 to 8 percent for concrete exposed to freezing and thawing; and 2 to 4 percent for other concrete; per ASTM C 173.

7. Maximum Slump: 4 to 2 inches for structures; 3 to 1 1/2 inches for blocks and pavement.

8. Maximum Aggregate Size: one inch.

2.08 MIXING

A. Transit Mixers: Comply with ASTM C 94.

B. During hot weather or under other conditions contributing to rapid setting of concrete, mixing times will be reduced as follows:

1. When air temperature is between 85 and 90 degrees (F), reduce mixing time and delivery time from 90 minutes to 75 minutes.

2. When air temperature is above 90 degrees (F), reduce mixing time and delivery time to 60 minutes.

C. Provide batch ticket for each batch used in the work. Ticket shall indicate project identification name and number, date, mix type, mix time, quantity, and amount of water added.

PART 3 EXECUTION

3.01 EXAMINATION

A. Verify lines, levels, and dimensions before proceeding with work of this section.

3.02 PREPARATION

A. Form work: Comply with requirements of ACI 301. Design and fabricate forms to support all applied loads until concrete is cured, and for easy removal without damage to concrete.

B. Forms shall be mortar tight, properly aligned, as indicated, to produce concrete surfaces meeting the surface requirements specified herein.

C. Forms shall be constructed so they can be removed without hammering on or prying against concrete, and without damaging concrete in any way.

D. Verify that forms are clean before applying release agent.

E. Coordinate placement of joint devices with erection of concrete form work and placement of form accessories.

F. Prepare previously placed concrete by cleaning with steel brush and applying bonding agent in accordance with manufacturer's instructions.

G. In locations where new concrete is doweled to existing work, drill holes in existing concrete, fill holes with epoxy bonding agent, and insert steel dowels.

H. The Engineer's review of form work will not relieve the Contractor from any responsibility as to the adequacy of the form work, shoring and bracing design. All form work installed by the Contractor shall be solely at his risk. The Engineer's review will not lessen or diminish the Contractor's liability.

I. Alignment and Tolerances. Form work shall be designed and constructed so that concrete surfaces of finished structures will comply with the tolerances specified in ACI 347; and will conform to the following:

1. Vertical Alignment: maximum allowable variation, from bottom to top of a wall, is plus or minus 3/8 inch.

2. Plumb: maximum allowable variations as follows:
   a. In plumb and surfaces of columns and walls is plus or minus 1/4 inch in any 10-feet of length; and a maximum of one-inch for entire length.
   b. In plumb for exposed corner, control-joint grooves, or other conspicuous lines is plus or minus 1/4 inch in any 20-feet of length; and a maximum of 1/2-inch for the entire length.

3. Wall Thickness: shall not vary more than minus 1/8 inch or plus 1/2 inch.

4. Level or Grade: maximum variation from level or grade indicated shall not exceed plus or minus 1/4 inch in any 10-feet of length; or plus or minus 3/8-inch in any 20-feet of length.

5. Distance: maximum variation in distance between walls, columns, or other members shall not exceed plus or minus 1/4 inch in any 10-feet of length; and not more than one-inch total variation.

3.03 INSTALLING REINFORCEMENT

A. Comply with requirements of ACI 301. Clean reinforcement of loose rust and mill scale, and accurately position, support, and secure in place to achieve not less than minimum concrete coverage required for protection.

B. Install wire fabric in maximum possible lengths, and offset end laps in both directions. Splice laps with tie wire.

C. Verify that anchors, seats, plates, reinforcement and other items to be cast into concrete are accurately placed, positioned securely, and will not interfere with concrete placement.

3.04 PLACING CONCRETE

A. Place concrete in accordance with ACI 304R.

B. Place concrete for floor slabs in accordance with ACI 302.1R.

C. Notify Engineer not less than 24 hours prior to commencement of placement operations. No concrete shall be placed until all form work, construction joints, reinforcing steel, and other items have been completed and accepted by the Engineer.

D. Before placing concrete, inspect and complete form work installations, reinforcing steel placement, and items to be embedded or cast-in.

E. Notify other crafts involved in ample time to permit installation of their work; cooperate with other trades in setting such work.

F. All dirt, chips, sawdust, debris, mud, water and other foreign matter shall be removed from within forms or within excavated areas adjacent to forms before any concrete is placed.

G. Ensure reinforcement, inserts, waterstops, embedded parts, and formed construction joint devices will not be disturbed during concrete placement.

H. Separate slabs on grade from vertical surfaces with 1/4-inch-thick joint filler.

I. Install joint devices in accordance with manufacturer's instructions.

J. Concrete shall be conveyed from mixer to forms as rapidly as possible within specified time limits; and by methods that will prevent segregation of concrete mix.

K. Concrete shall be placed within 15 minutes after it has been discharged from mixer.

L. Provide adequate equipment and labor for conveying concrete to ensure a continuous flow of concrete at delivery point.

M. Concrete shall be deposited as close as possible to its final position in the forms; there shall be no vertical drop greater than 8 feet, except where suitable equipment is provided to prevent segregation of concrete and where specifically authorized.

N. Deposit concrete so that it will be effectively consolidated in horizontal layers not more than 12 inches thick; except that all slabs shall be placed in single layer.

O. Where placement consists of several layers, place each layer while the preceding layer is still plastic to avoid cold joints, and within 30 minutes after placement of preceding layer.

P. Maintain records of concrete placement. Record date, location, quantity, air temperature, and test samples taken.

Q. Place concrete continuously between predetermined expansion, control, and construction joints.

R. Do not interrupt successive placement; do not permit cold joints to occur.

S. Do not use concrete which becomes non-plastic or unworkable, does not meet the required quality control limits, or which has become contaminated by foreign materials. Do not use re-tempered concrete. Remove rejects concrete from the project site and dispose of in an acceptable manner.

T. Place floor slabs in checkerboard or saw cut pattern indicated.

U. Saw cut joints within 24 hours after placing. Use 3/16-inch-thick blade, cut into 1/4 depth of slab thickness.

V. Screed floors and slabs on grade level, maintaining surface flatness of maximum 1/4 inch in 10 ft.

W. Concrete shall not be placed in water; nor shall water be allowed to rise over freshly placed concrete until the concrete has set sufficiently to prevent its being damaged thereby.

3.05 CONSOLIDATING

A. Consolidate each layer of concrete immediately after placement with internal vibrators in accordance with ACI 309, except for slabs 4 inches thick or less.

B. Vibrators shall be inserted vertically at uniform spacing over entire area of placement; spacing to be approximately 1-1/2 times radius of action of vibrator. Vibrators shall penetrate rapidly to bottom of layer being placed, and at least 6 inches into the preceding layer.

C. Vibrators shall be supplemented by hand spading adjacent to forms on exposed surfaces. Concrete shall be compacted and well worked into all corners and angles in forms, and around reinforcement and embedded items.

3.06 FORM REMOVAL

A. Forms shall be removed in a manner that will prevent damage to concrete and ensure complete safety of the structure.

B. Forms shall not be removed until approval is given by the Engineer.

C. Form work for columns, walls and other members not supporting weight of concrete may be removed when concrete has attained sufficient strength to resist damage from removal operation; but not before at least 48 hours after concrete placement.

D. Form work for columns, walls, roof slabs, and other members supporting weight of concrete may not be removed until concrete has attained sufficient strength to carry imposed loads as determined by compression tests, and when directed by the Engineer.

3.07 CONCRETE FINISHING

A. Repair and patch surface defects, including tie holes, on all surfaces immediately after removing form work.

B. Unexposed Form Finish: Rub down or chip off fins or other raised areas 1/4 inch or more in height.

C. Exposed Form Finish: Rub down or chip off and smooth fins or other raised areas 1/4 inch or more in height. Provide finish as follows:

1. Smooth Rubbed Finish: Wet concrete and rub with carborundum brick or other abrasive, not more than 24 hours after form removal.

2. Grout Cleaned Finish: Wet areas to be cleaned and apply grout mixture by brush or spray; scrub immediately to remove excess grout. After drying, rub vigorously with clean burlap, and keep moist for 36 hours.

D. Concrete Slabs: Finish to requirements of ACI 302.1R, and as follows:

1. Wood float surfaces that will receive trowel finish or other finishes, as indicated.

2. Steel trowel surfaces that will be left exposed.

3. Broom finishes exterior concrete to provide non-slip finish.

E. In areas with floor drains, maintain floor elevation at walls; pitch surfaces uniformly to drains at 1:50 nominal.

F. All exposed edges to be chamfered; 3/4 inches minimum.

3.08 CURING AND PROTECTION

A. Comply with requirements of ACI 308. Immediately after placement, protect concrete from premature drying, excessively hot or cold temperatures, and mechanical injury.

B. Maintain concrete with minimal moisture loss at relatively constant temperature for period necessary for hydration of cement and hardening of concrete.

1. Normal concrete: Not less than 7 days.

C. Formed Surfaces: Cure by moist curing with forms in place for full curing period.

D. Surfaces Not in Contact with Forms:

1. Start initial curing as soon as free water has disappeared and before surface is dry. Keep continuously moist for not less than three days by water ponding, water-fog spray, or saturated burlap, as acceptable to the Engineer.

2. Begin final curing after initial curing but before surface is dry.
   a. Moisture-retaining cover: Seal in place with waterproof tape or adhesive.
   b. Curing compound: Apply in two coats at right angles, using application rate recommended by

manufacturer.

3.09 FIELD QUALITY CONTROL

A. An independent testing agency will perform field quality control tests, as specified in Section 01400.

B. Provide free access to concrete operations at project site and cooperate with appointed firm.

C. Submit proposed mix design to engineer and testing firm for review prior to commencement of concrete operations.

D. Tests of concrete and concrete materials may be performed at any time to ensure conformance with specified requirements.

E. Compressive Strength Tests: ASTM C 39. For each test, mold and cure three concrete test cylinder. Obtain test samples for every 50-cu yd or less of concrete placed.

F. Take two additional test cylinders during cold weather concreting, cured on job site under same conditions as concrete it represents.

G. Perform one slump test for each load at point of discharge; and perform slump test with each set of tests cylinders taken.

1. If maximum slump for the application is exceeded, it will be assumed that the water content is excessive and the load shall be rejected.

2. If slump is less that the minimum for the application, a measured quantity of water may be added to the mix; quantity shall not exceed 1/6 gallon of water per bag of cement.

3. Water shall be added only in the presence of the Engineer and after a slump test has been made.

4. If concrete has been mixed for more than one hour, the loss of slump shall be considered as being caused by setting of concrete; water shall not be added, and the load shall be rejected.

H. Perform test to determine air content in accordance with ASTM C 231; a minimum of one test shall be done each time a slump test is made. Air content shall be within specified limits.

3.10 DEFECTIVE CONCRETE

A. Test Results: The testing agency shall report test results in writing to Engineer and Contractor within 24 hours of test.

B. Defective Concrete: Concrete not conforming to required lines, details, dimensions, tolerances or specified requirements.

C. Repair or replacement of defective concrete will be determined by the Engineer. The cost of additional testing shall be borne by Contractor when defective concrete is identified.

D. Do not patch, fill, touch-up, repair, or replace exposed concrete except upon express direction of Engineer for each individual area.

3.11 SCHEDULE - CONCRETE TYPES AND FINISHES

A. Structure Not Exposed to View: 4,000 psi 28-day concrete; form finish surface, with honeycomb and holes filled and repaired.

B. Exposed Structures: 4,000 psi 28-day concrete; air entrained, smooth rubbed finish.

PART 4 CONCRETE REHABILITATION FOR EXISTING CONCRETE STRUCTURE

4.01 SURFACE PREPARATION PROCEDURES

A: Contractor shall pump or other approved method to provide a dewatered work area for concrete rehabilitation work on existing pumphouse vault.

B: Contractor shall remove debris from existing pumphouse vault for concrete rehabilitation work. Removed materials shall be disposed of off-site in a suitable landfill in accordance with laws and regulations.

C: Contractor shall assume that water to be removed is up to 6 feet deep in existing pumphouse vault.

D: Once water, silt, and debris are cleared contractor shall:

a. Complete surface preparation on all exposed surfaces of concrete, all accessible exposed concrete surfaces above grade and in existing pumphouse vault (See Plan).

b. ***Surface Preparation:*** Smooth surfaces (e.g., where steel forms are used) or surfaces covered with form oil or other contaminants shall be cleaned, water-blasted, lightly sand-blasted, or acid etched as necessary to provide a clean absorbent surface. The surface must also have an open capillary system to provide "tooth and suction" for the Xypex treatment. A minimum of CSP-3 per the International Concrete Repair Institute Concrete Surface Profile Chips or other equivalent standard is required. Surfaces to be acid-etched shall be should be saturated with water before application of the acid. After acid etching flush concrete thoroughly with clean water. Horizontal surfaces shall have a rough wood float or broom finish. Where a smooth trowel finish is required on horizontal surface, crystalline waterproofing material shall be applied by dry shake method at time of concrete finishing in accordance with manufacturer's product data.

c. Concrete surfaces covered with earth are considered non-accessible.

d. All loose concrete debris shall be removed by the contractor and shall be disposed of off-site in a suitable landfill in accordance with laws and regulations. Contractor shall be responsible for preventing and controlling discharge of any concrete material downstream.

e. Engineer to complete site observations following surface preparation efforts.

4.02 REPAIR OF SURFACE DEFECTS

A. Upon completion of surface preparation for previously placed concrete all exposed surfaces shall be carefully examined for defects such as; surface cracking, honey combing, rock pockets, and faulty construction joints. Any defects shall be repaired as specified herein to secure a smooth, uniform, and continuous surface.

1. No repairs shall be made until after inspection by the ENGINEER.

2. Concrete containing minor voids, holes, honeycombing, or similar depression defects shall be repaired as specified herein.

3. Concrete containing extensive voids, holes, honeycombing or similar depression defects, shall be completely removed and replaced as specified herein.

B. ***Repair of Defects:*** Concrete defects shall be repaired as specified in Section 071616 Part 3.02.B. Procedures are generally as follows:

1. Cracks and Faulty Construction Joints:

a. Chip out cracks, faulty construction joints and other defects to a depth of 1.5 inches (37 mm) and a width of one inch (25 mm). A "V" shaped slot is not acceptable. The slot may be saw cut instead of chipped but ensure that the slot is dovetailed or otherwise shaped such that there will be mechanical interlock of materials placed into the slot at a later stage.

b. Clean slot of debris and dust. Soak area with water and remove excess surface water. Apply a slurry coat of Xypex Concentrate at the rate of 1.5 lb./sq. yd. (0.8 kg/m^2) to the slot.
c. While slurry coat is still tacky, fill cavity with Dry-Pac. Compress tightly into cavity using pneumatic packer or block and hammer.
d. This step may be omitted if the area filled with Dry-Pac will be subsequently covered with Xypex coating. Wet Dry-Pac surface lightly with water, then apply a slurry coat of Xypex Concentrate at a coverage rate of 1.5 – 2 lb./sq. yd. (0.8 – 1 kg/m^2) over the repaired area to 6" (150 mm) on either side of slot.
e. For concrete with major cracking (if discovered); completely remove and replace any loose concrete section and/or provide new steel angle reinforcement shown on improvement plans. Fill large voids or missing concrete sections with Xypex Megamix II

2. All areas of poor concrete consolidation (honeycombing or rock pockets) and or other defective concrete shall be repaired as follows:
   a. Defective surfaces to be repaired shall be cut back from trueline a minimum depth of ½-inch over the entire area. Feathered edges will not be permitted.
   b. Where shaping and cutting tools are not required in order to deepen the area properly, the surface shall be prepared for bonding by the removal of all laitance or soft material, and not less than 1/32-inch depth of the surface film from all hard portions, by means of an efficient sandblast.
   c. After cutting and sandblasting the surface shall be prepared.
   d. Fill in prepared area using Xypex Patch'n Plug.

C. All repairs shall be built up and shaped in such a manner that the completed work will conform to the requirements of this Section, as applicable, using acceptable methods which will not disturb the bond, cause sagging, or cause horizontal fractures. Surfaces of said repairs shall receive the same kind and amount of curing treatment as required for the concrete in the repaired section.

4.03 GENERAL SURFACE TREATMENT APPLICATION

A. Upon completion of surface preparation and repair of surface defects apply general surface treatment application as follows:
   1. Apply cementitious crystalline damproofing; XYPEX slurry concentrate, or approved equal, in accordance with manufacturer's product data and as specified in SECTION 071616. Apply XYPEX treatment to concrete surfaces with semi-stiff bristle brush, push broom (for large horizontal surfaces), or suitable spray equipment.

END OF SECTION

SECTION 03350

BONDED CONCRETE FLOOR OVERLAY

PART 1 GENERAL

1.01 SECTION INCLUDES

A. Materials, surface preparation, installation, and finishing of concrete floor overlays, bonded to a concrete substrate. with an epoxy adhesive.

1.02 RELATED SECTIONS

A. Section 03300 - Cast-In-Place Concrete: Prepared concrete floors ready to receive finish.

B. Section 03300 - Cast-In-Place Concrete: Control and formed expansion and contraction joints and joint devices.

1.03 MEASUREMENT AND PAYMENT

A. See Section 02100 - Measurement and Payment.

1.04 SUBMITTALS

A. See Section 01300 - Administrative Requirements, for submittal procedures.

B. Product Data: Provide manufacturer’s catalog data and descriptive literature for epoxy bonding adhesive and concrete admixtures.

C. Submit a sequence of construction, detailing the steps the Contractor will follow to install the bonded concrete overlay, including surface preparation, application methods, and sequencing of concrete placements.

1.05 DELIVERY, STORAGE, AND HANDLING

A. Deliver materials in manufacturer's sealed packaging, including application instructions.

1.06 ENVIRONMENTAL REQUIREMENTS

A. Ventilation: Sufficient to prevent injurious gases from temporary heat or other sources affecting concrete.

PART 2 PRODUCTS

2.01 CONCRETE

A. See Section 03300 for concrete requirements.

B. Coarse aggregate for concrete shall be a maximum of 3/8-inch.

C. Maximum water/cementitious ratio for concrete shall be 0.45.

D. Concrete mix design shall contain a superplasticizer to provide workability without adding water.

E. A pozzolan shall be provided in the concrete mix. Pozzolans shall not exceed 15 percent of the total cementitious materials.

2.02 EPOXY BONDING ADHESIVE

A. Epoxy bonding adhesive shall be a two-component, 100% solids, moisture-tolerant, structural epoxy, designed to bond new concrete to existing concrete surfaces.

B. Typical Data @ 73 Degree F.

1. Color: concrete gray.

2. Viscosity: approximately 2,800 cps.

3. Pot Life: approximately 30 minutes.

4. Contact Time: at 40-degree F: 14 to 16 hours;
at 73-degree F: 3.5 to 4 hours;
at 90-degree F: 1.5 to 2 hours.

5. Compressive Modulus, psi: 7-day 2.0 x 105 psi.

6. Tensile Properties (ASTM D-638): 7-day tensile strength 5,100 psi.

7. Elongation at Break: 1.8%.

8. Bond Strength (ASTM C-882): 14-day (moist cure) Plastic Concrete to Hardened Concrete: 2,400 psi.

C. Product shall be Sikadur 32 by Sika Chemical Corporation, or acceptable equal.

PART 3 EXECUTION

3.01 EXAMINATION

A. Verify that floor surfaces are acceptable to receive the work of this section.

3.02 CONCRETE

A. Concrete shall conform to requirements of Section 03300.

B. All concrete placed as part of the bonded overlay shall receive a water cure for a minimum of 7 days.

C. Concrete shall receive an S-4 finish, as directed.

C. Slope the concrete overlay towards the floor drains, as indicated on the drawings and as directed; maintain concrete thickness at walls as indicated and as directed, and maintain the concrete thickness at floor drain as indicated and as directed.

3.03 EPOXY BONDING ADHESIVE

A. Apply sealer to scheduled floor surfaces in accordance with manufacturer's instructions.

3.04 TOLERANCES

A. Prior to applying the epoxy adhesive, the existing concrete floor surface shall be cleaned with high-pressure water or sandblasting to remove all oil, grease, and other deleterious substances.

1. The existing concrete surface shall be free of dust, grit, and other loose material which will adversely affect the quality of the bond.

B. Apply the epoxy bonding adhesive by either spraying, rolling or brushing the epoxy onto the surface to be bonded to. Follow the recommendations of the epoxy bonding adhesive manufacturer, including application rates and set times.

C. Sequence construction such that concrete is placed within the contact times recommended by the epoxy adhesive manufacturer.

1. Concrete shall not be placed on adhesive that has lost its tackiness. Such adhesive shall be completely removed from the surface, and a new application of adhesive applied.

END OF SECTION

SECTION 03356

CONCRETE FLOOR FINISHING

PART 1 GENERAL

1.01 SECTION INCLUDES

A. Finishing slabs on grade and monolithic floor slabs.

B. Surface treatment with sealer.

1.02 RELATED SECTIONS

A. Section 03300 - Cast-In-Place Concrete: Prepared concrete floors ready to receive finish.

B. Section 03300 - Cast-In-Place Concrete: Control and formed expansion and contraction joints and joint devices.

1.03 REFERENCES

A. ACI 301 - Specifications for Structural Concrete for Buildings; American Concrete Institute International.

B. ACI 302.1R - Guide for Concrete Floor and Slab Construction; American Concrete Institute International.

C. ASTM E 1155 - Standard Test Method for Determining F(F) Floor Flatness and F(L) Floor Levelness Numbers.

D. Use the latest edition of the above reference standards as of the date of the project.

1.04 SUBMITTALS

A. See Section 01300 - Administrative Requirements, for submittal procedures.

B. Product Data: Provide data on sealer, including information on compatibility of different products and limitations.

C. Maintenance Data: Provide data on maintenance renewal of applied coatings.

1.05 QUALITY ASSURANCE

A. Perform Work in accordance with ACI 301.

1. Maintain one copy on project site.

1.06 DELIVERY, STORAGE, AND HANDLING

A. Deliver materials in manufacturer's sealed packaging, including application instructions.

1.07 PROJECT CONDITIONS

A. Coordinate the work with concrete floor placement and concrete floor curing.

1.08 ENVIRONMENTAL REQUIREMENTS

A. Ventilation: Sufficient to prevent injurious gases from temporary heat or other sources affecting concrete.

PART 2 PRODUCTS

2.01 MANUFACTURERS

A. Concrete Floor Finishes:

1. Dayton Superior Corp.
2. L&M Construction Chemicals, Inc.
3. Master Builders, Inc.
4. Substitutions: See Section 01600 - Product Requirements.

2.02 COMPOUNDS - SEALERS

A. Sealer: Liquid type, urethane, acceptable to the Engineer.

PART 3 EXECUTION

3.01 EXAMINATION

A. Verify that floor surfaces are acceptable to receive the work of this section.

3.02 FLOOR FINISHING

A. Finish concrete floor surfaces in accordance with ACI 301 and ACI 302.1R.

B. Steel trowel surfaces that are scheduled to be exposed.

C. In areas with floor drains, maintain design floor elevation at walls; slope surfaces uniformly to drains at 1/8 inch per foot nominal.

3.03 FLOOR SURFACE TREATMENT

A. Apply sealer to scheduled floor surfaces in accordance with manufacturer's instructions.

3.04 TOLERANCES

A. Measure flatness of slabs in accordance with ACI 302.1R and to achieve the following tolerances:

1. Maximum Variation of Surface Flatness for Exposed Concrete Floors: 1/4 inch in 10 feet.

B. Finish concrete to achieve the following tolerances:

1. Exposed to View and Foot Traffic: Ff 20 and Fl 15.

C. Correct the slab surface if tolerances are less than specified.

D. Correct defects by grinding or by removal and replacement of the defective work. Areas requiring corrective work will be identified. Re-measure corrected areas by the same process.

END OF SECTION

DIVISION 05

METAL WORK

SECTION 05200

MISCELLANEOUS METAL WORK

PART 1 GENERAL

1.01 SECTION INCLUDES

A. Miscellaneous metal trim, framing, supports, and appurtenant items.

B. Anchor bolts and other anchorage fastening devices.

C. Grouting under base plates.

1.02 MEASUREMENT AND PAYMENT

A. See Section 02100 - Measurement and Payment.

1.03 REFERENCES

A. See Section 05120 for reference standards.

1.04 SUBMITTALS

A. See Section 01300 - Administrative Requirements, for submittal procedures.

B. Shop Drawings:

1. Indicate profiles, sizes, spacing, locations of structural members, openings, attachments, and fasteners.

2. Connections not detailed.

3. Indicate cambers and loads.

4. Indicate welded connections with AWS A 2.4 welding symbols. Indicate net weld lengths.

C. Manufacturer's Mill Certificate: Certify that products meet or exceed specified requirements.

D. Welders Certificates: Certify welders employed on the Work, verifying AWS qualification within the previous 12 months.

1.05 QUALITY ASSURANCE

A. Take field measurements prior to preparation of shop drawings and fabrication to ensure proper fitting of work.

B. Fabricate miscellaneous steel members in accordance with AISC M 016.

C. Comply with Section 10 of AISC S303 for architecturally exposed structural steel.

D. Maintain one copy of each document on site.

E. Fabricator: Company specializing in performing the work of this section with minimum three years of documented experience.

F. Erector: Company specializing in performing the work of this section with minimum three years of documented experience.

G. Design connections not detailed on the drawings under direct supervision of a Professional Structural Engineer experienced in design of this work and licensed in Utah.

1.06 REGULATORY REQUIREMENTS

A. Conform to applicable requirements of the Uniform Building Code.

B. Conform to applicable requirements of Spanish Fork City.

PART 2 PRODUCTS

2.01 MATERIALS

A. Structural Steel Members: ASTM A 36.

B. Cold-Formed Structural Tubing: ASTM A 500, Grade A.

C. Hot-Formed Structural Tubing: ASTM A 501, seamless.

D. Steel Bars: ASTM A 108.

E. Steel Plate: ASTM A 514.

F. Steel Sheet: ASTM A 570 hot-rolled, or ASTM A 611 cold-rolled.

G. Pipe: ASTM A 53, Grade B, Finish black.

H. Shear Stud Connectors: ASTM A 108, Grade 1015.

I. Carbon Steel Bolts and Nuts: ASTM A 307, Grade A galvanized to ASTM A 153, Class C for galvanized structural members.

J. High-Strength Bolts, Nuts, and Washers: ASTM A 325, Type 1, plain.

K. Anchor Bolts: ASTM A 307, Grade C.

L. High-Strength Anchor Bolts: ASTM A 325, Type 1 plain.

M. Welding Materials: AWS D 1.1; type required for materials being welded.

N. Grout: Non-shrink, non-metallic aggregate type, complying with ASTM C 1107 and capable of developing a minimum compressive strength of 7,000 psi at 28 days.

O. Shop and Touch-Up Primer: Fabricator's standard.

P. Touch-Up Primer for Galvanized Surfaces: Fabricator's standard.

2.02 FABRICATION

A. Shop fabricate to greatest extent possible.

B. Continuously seal joined members by continuous welds. Grind exposed welds smooth.

C. Fabricate connections for bolt, nut, and washer connectors.

D. Develop required camber for members.

E. Provide inserts and anchoring devices which must be set in concrete or built into masonry for installation of miscellaneous metal work.

2.03 FINISH

A. Prepare structural component surfaces in accordance with SSPC SP.

B. Galvanize structural steel members to comply with ASTM A 123. Provide minimum 1.8 oz per square foot galvanized coating.

2.04 SOURCE QUALITY CONTROL AND TESTS

A. Provide shop testing and analysis of structural steel.

B. Welded Connections: Visually inspect all shop-welded connections and test welds using one of the following:

1. Radiographic testing per ASTM E 94 and ASTM E 142.

2. Ultrasonic testing per ASTM E 164.

PART 3 EXECUTION

3.01 EXAMINATION

A. Verify that conditions are appropriate for erection of structural steel and that the work may properly proceed.

3.02 ERECTION

A. Erect miscellaneous metal items as shown on the drawings and as directed by the Engineer; in compliance with AISC S 303.

B. Allow for erection loads, and provide sufficient temporary bracing to maintain structure in safe condition, plumb, and in true alignment until completion of erection and installation of permanent bracing.

C. Field weld components and shear studs indicated on shop drawings.

D. Use carbon steel bolts only for temporary bracing during construction, unless otherwise specifically permitted on drawings. Install high-strength bolts in accordance with AISC S 329.

E. Do not field cut or alter structural members without approval of Engineer.

F. After erection, prime welds, abrasions, and surfaces not shop primed, except surfaces to be in contact with concrete.

G. Grout solidly between column plates and bearing surfaces, complying with manufacturer's instructions for non-shrink grout. Trowel grouted surfaces smooth, splaying neatly to 45 degrees.

3.03 ERECTION TOLERANCES

A. Maximum Variation from Plumb: 1/4 inch.

B. Maximum Offset from True Alignment: 1/4 inch.

END OF SECTION

SECTION 05510

METAL STAIRS

PART 1 GENERAL

1.01 SECTION INCLUDES

A. Structural steel stair framing and supports.

B. Open grating stair treads, and checkered plate stair treads and landings.

C. Integral balusters and handrails.

1.02 RELATED SECTIONS

A. Section 03300 - Cast-In-Place Concrete: Placement of metal anchors in concrete.

B. Section 04820 - Reinforced Unit Masonry Assemblies: Placement of metal anchors in masonry.

C. Section 05120 - Metal Fabrications.

D. Section 09900 - Paints and Coatings: Paint finish.

1.03 REFERENCES

A. ASTM A 36 - Standard Specification for Carbon Structural Steel.

B. ASTM A 53 - Standard Specification for Pipe, Steel, Black and Hot-Dipped, Zinc-Coated, Welded and Seamless.

C. ASTM A 123 - Standard Specification for Zinc (Hot-Dip Galvanized) Coatings on Iron and Steel Products.

D. ASTM A 153 - Standard Specification for Zinc Coating (Hot-Dip) on Iron and Steel Hardware.

E. ASTM A 283 - Standard Specification for Low and Intermediate Tensile Strength Carbon Steel Plates.

F. ASTM A 307 - Standard Specification for Carbon Steel Bolts and Studs, 60 000 PSI Tensile Strength.

G. ASTM A 325 - Standard Specification for Structural Bolts, Steel, Heat Treated, 120/105 ksi Minimum Tensile Strength.

H. ASTM A 500 - Standard Specification for Cold-Formed Welded and Seamless Carbon Steel Structural Tubing in Rounds and Shapes.

I. ASTM A 501 - Standard Specification for Hot-Formed Welded and Seamless Carbon Steel Structural Tubing.

J. ASTM A 653 - Standard Specification for Steel Sheets, Zinc-Coated (Galvanized) or Zinc-Iron Alloy-Coated (Galvannealed) by the Hot-Dip Process.

K. ASTM E 935 - Standard Test Methods for Performance of Permanent Metal Railing Systems and Rails for Buildings.

L. ASTM E 985 - Standard Specification for Permanent Metal Railing Systems and Rails for Buildings.

M. AWS A2.4 - Standard Symbols for Welding, Brazing, and Nondestructive Examination; American Welding Society.

N. AWS D1.1 - Structural Welding Code - Steel; American Welding Society.

O. NAAMM AMP 510 - Metal Stairs Manual; The National Association of Architectural Metal Manufacturers; Fifth Edition.

P. NAAMM MBG 531 - Metal Bar Grating Manual; The National Association of Architectural Metal Manufacturers.

Q. SSPC-Paint 15 - Steel Joist Shop Paint; Society for Protective Coatings; (Part of Steel Structures Painting Manual, Vol. Two).

R. SSPC-Paint 20 - Zinc-Rich Primers (Type I, "Inorganic," and Type II, "Organic"); Society for Protective Coatings; (Part of Steel Structures Painting Manual, Vol. Two).

S. SSPC-SP 2 - Hand Tool Cleaning; Society for Protective Coatings; (Part of Steel Structures Painting Manual, Vol. Two).

T. Use the latest edition of the above reference standards as of the date of the project.

1.04 DESIGN REQUIREMENTS

A. Design and fabricate stair assembly to support a uniform live load of 100 lb/sq ft and a concentrated load of 300 lb/square foot with deflection of stringer or landing framing not to exceed 1/180 of span. Test in accordance with ASTM A 935.

B. Design and fabricate railing assemblies in accordance with ASTM E 985.

C. Design railing assemblies, wall rails, and attachments to resist lateral force of 75 lbs at any point without damage or permanent set. Test in accordance with ASTM A 935.

D. Fabricate metal stairs to comply with NAAMM AMP 510, Class Commercial.

1.05 SUBMITTALS

A. See Section 01300 - Administrative Requirements, for submittal procedures.

B. Shop Drawings: Indicate profiles, sizes, connection attachments, reinforcing, anchorage, size and type of fasteners, and accessories.

1. Indicate welded connections using standard AWS A2.4 welding symbols. Indicate net weld lengths.

C. Welders' Certificates: Submit under provisions of Section 01300, certifying welders employed on the Work, verifying AWS qualification within the previous 12 months.

1.06 QUALITY ASSURANCE

A. Perform design and prepare shop drawings under direct supervision of a Professional Structural Engineer experienced in design of this work and licensed in the State of Utah.

PART 2 PRODUCTS

2.01 MATERIALS

A. Steel Sections: ASTM A 36.

B. Steel Tubing: ASTM A 500, Grade B.

C. Steel Plates: ASTM A 283.

D. Pipe: ASTM A 53, Grade B Schedule 40, galvanized finish.

E. Galvanized Steel Sheet: ASTM A 653, Structural Steel (SS) Grade 33 with G40/Z120 coating.

F. Bolts, Nuts, and Washers: ASTM A 325 galvanized to ASTM A 153 for galvanized components.

G. Exposed Mechanical Fastenings: Flush countersunk screws or bolts; consistent with design of stair structure.

H. Welding Materials: AWS D1.1; type required for materials being welded.

I. Shop and Touch-Up Primer: SSPC-Paint 15, Type I - Red Oxide.

J. Touch-Up Primer for Galvanized Surfaces: SSPC-Paint 20, Type I - Inorganic.

2.02 COMPONENTS

A. Gratings: Comply with NAAMM MBG 531, welded type, main bar size of 3/16 x 1-1/2 inches.

2.03 FABRICATION - GENERAL

A. Fit and shop assemble components in largest practical sections, for delivery to site.

B. Fabricate components with joints tightly fitted and secured.

C. Grind exposed joints flush and smooth with adjacent finish surface. Make exposed joints butt tight, flush, and hairline. Ease exposed edges to small uniform radius.

D. Exposed Mechanical Fastenings: Flush countersunk screws or bolts; unobtrusively located; consistent with design of component, except where specifically noted otherwise.

E. Supply components required for anchorage of fabrications. Fabricate anchors and related components of same material and finish as fabrication, except where specifically noted otherwise.

F. Fabricate components accurately for anchorage to each other and to building structure.

2.04 FABRICATION - OPEN GRATING STAIRS AND LANDINGS

A. Fabricate treads of 1-1/2-inch-thick steel grating in accordance with NAAMM MBG 531, of welded steel bars, welded to supports; galvanized finish.

B. Form hollow stringers with rolled steel channels; galvanized finish.

C. Form landings 1-1/2-inch thick in accordance with NAAMM MBG 531; galvanized finish. Reinforce underside with steel beam, as indicated, to attain design load requirements.

D. Form balusters with 2-inch square steel sections, welded to stringers; galvanized finish.

2.05 FINISHING

A. Prepare surfaces to be primed in accordance with SSPC-SP 2.

B. Clean surfaces of rust, scale, grease, and foreign matter prior to finishing.

C. Do not prime surfaces in direct contact with concrete or where field welding is required.

D. Prime paint items with two coats.

E. Galvanizing: Galvanize items indicated to minimum 2.0 oz/square foot zinc coating in accordance with ASTM A 123.

PART 3 EXECUTION

3.01 EXAMINATION

A. Verify that field conditions are acceptable and are ready to receive work.

3.02 PREPARATION

A. Clean and strip primed steel items to bare metal where site welding is required.

B. Supply items required to be cast into concrete and embedded in masonry with setting templates.

3.03 INSTALLATION

A. Install components plumb and level, accurately fitted, free from distortion or defects.

B. Provide anchors, plates, angles, hangers, and struts required for connecting stairs to structure.

C. Allow for erection loads, and for sufficient temporary bracing to maintain true alignment until completion of erection and installation of permanent attachments.

D. Field weld components indicated on shop drawings. Perform field welding in accordance with AWS D1.1.

E. Field bolt and weld to match shop bolting and welding. Conceal bolts and screws whenever possible. Where not concealed, use flush countersunk fastenings.

F. Mechanically fasten joints butted tight, flush, and hairline. Grind welds smooth and flush.

G. Obtain approval prior to site cutting or creating adjustments not scheduled.

H. After erection, prime welds, abrasions, and surfaces not shop primed or galvanized, except surfaces to be in contact with concrete.

3.04 ERECTION TOLERANCES

A. Maximum Variation from Plumb: 1/4 inch per story, non-cumulative.

B. Maximum Offset from True Alignment: 1/4 inch.

END OF SECTION

DIVISION 06

CARPENTRY

SECTION 06100

ROUGH CARPENTRY

PART 1 GENERAL

1.01 SECTION INCLUDES

A. Structural roof framing.

B. Roof sheathing.

C. Preservative treatment of wood.

D. Fire retardant treatment of wood.

E. Miscellaneous framing and sheathing.

F. Electrical panel boards.

G. Wood nailers, curbs, and can't strips for roofing and items installed on roof.

H. Miscellaneous wood nailers and furring strips.

1.02 RELATED SECTIONS

A. Section 05120 - Structural Steel: Prefabricated beams and columns for support of wood framing.

1.03 REFERENCES

A. ANSI A208.1 - American National Standard for Wood Particleboard.

B. AFPA WCD 1 T11 - Manual for Wood Frame Construction; American Forest and Paper Association.

C. ASTM C 79 - Standard Specification for Treated Core and Nontreated Core Gypsum Sheathing Board.

D. AWPA C2 - Lumber, Timber, Bridge Ties and Mine Ties -- Preservative Treatment by Pressure Processes; American Wood-Preservers' Association.

E. PS 1 - Construction and Industrial Plywood; National Institute of Standards and Technology (Department of Commerce).

F. PS 20 - American Softwood Lumber Standard; National Institute of Standards and Technology (Department of Commerce).

G. RIS (GR) - Standard Specifications for Grades of California Redwood Lumber; Redwood Inspection Service.

H. WCLB (GR) - Standard Grading Rules for West Coast Lumber No. 17; West Coast Lumber Inspection Bureau.

I. WWPA G-5 - Western Lumber Grading Rules; Western Wood Products Association.

J. Use the latest edition of the above reference standards as of the date of the project.

1.04 SUBMITTALS

A. See Section 01300 - Administrative Requirements, for submittal procedures.

B. Product Data: Provide technical data on wood preservative materials and application instructions.

C. Shop Drawings: For site fabricated truss frames, indicate dimensions, wood species and grades, component profiles, drilled holes, fasteners, connectors, details, and sequence of erection.

D. Manufacturer's Certificate: Certify that wood products supplied for rough carpentry meet or exceed specified requirements.

1.05 QUALITY ASSURANCE

A. Lumber: Comply with PS 20 and approved grading rules and inspection agencies.

1. Acceptable Lumber Inspection Agencies: Any agency with rules approved by American Lumber Standards Committee.

2. Lumber of other species or grades, or graded by other agencies, is acceptable provided structural and appearance characteristics are equivalent to or better than products specified.

B. Exposed-to-View Rough Carpentry: Submit manufacturer's certificate that products meet or exceed specified requirements, in lieu of grade stamping.

1.06 QUALIFICATIONS

A. Design structural site fabricated trusses under direct supervision of a Professional Structural Engineer experienced in design of such trusses and licensed in Utah.

1.07 DELIVERY, STORAGE, AND HANDLING

A. Cover wood products to protect against moisture. Support stacked products to prevent deformation and to allow air circulation.

B. Protect site fabricated trusses from warping or other distortion by stacking in vertical position, braced to resist movement.

PART 2 PRODUCTS

2.01 DIMENSION LUMBER FOR CONCEALED APPLICATIONS

A. Grading Agency: Western Wood Products Association (WWPA).

B. Sizes: Nominal sizes as indicated on drawings, S4S.

C. Moisture Content: S-dry or MC 19.

D. Stud Framing (2 x 2 through 2 x 6):

1. Species: Douglas Fir-Larch.

2. Grade: No. 2.

E. Joist, Rafter, and Small Beam Framing (2 x 6 through 4 x 16):

1. Machine stress-rated (MSR) as follows:
   a. Fb-single (minimum extreme fiber stress in bending): 1350 psi.
   b. E (minimum modulus of elasticity): 1,300,000 psi.

2. Species: Douglas Fir-Larch.

F. Miscellaneous Blocking, Furring, and Nailers:

1. Lumber: S4S, No. 2 or Standard Grade.

2.02 EXPOSED DIMENSION LUMBER

A. Grading Agency: Western Wood Products Association (WWPA).

B. Sizes: Nominal sizes as indicated on drawings, S4S.

C. Moisture Content: S-dry or MC 19.

D. Stud Framing (2 x 2 through 2 x 6):

1. Species: Douglas Fir.

2. Grade: Clear.

E. Joist, Rafter, and Small Beam Framing (2 x 6 through 4 x 16):

1. Species: Douglas Fir.

2. Grade: Clear Structural.

F. Posts, Joist and Small Beam Framing (2 x 6 through 4 x 16):

1. Species: Redwood.

2. Grade: Select Heart.

2.03 TIMBERS FOR CONCEALED APPLICATIONS

A. Grading Agency: Western Wood Products Association (WWPA).

B. Sizes: Nominal sizes as indicated on drawings, S4S.

C. Moisture Content: S-dry (23 percent maximum).

D. Beams and Posts: 5 inches and over in thickness:

1. Species: Douglas Fir-Larch.

2. Grade: Select Structural.

2.04 EXPOSED TIMBERS

A. Moisture Content: Kiln-dry (20 percent maximum).

B. Surfacing: S4S.

C. Species: Douglas Fir.

D. Grade: No. 2 Dense.

2.05 EXPOSED BOARDS

A. Moisture Content: Kiln-dry (15 percent maximum).

B. Surfacing: S4S.

C. Species: Douglas Fir.

D. Grade: No. 2, 2 Common, or Construction.

2.06 CONSTRUCTION PANELS

A. APA Rated Roof Sheathing: Exterior Exposure Class, and as follows:

1. Structural I.

2. Span Rating: 24/0.

B. Particle Board Roof Sheathing: ANSI A208.1, Grade M-3 EXTERIOR GLUE; square edges, with panel clips.

C. Gypsum Sheathing: ASTM C 79/C 79M, water-resistant core, V-shaped long edges, 5/8 inch thick.

D. Miscellaneous Panels:

1. Concealed Plywood: PS 1, C-C Plugged, exterior grade.

2. Exposed Plywood: PS 1, A-D, interior grade.

3. Electrical Component Mounting: APA rated sheathing; fire retardant treated.

2.07 ACCESSORIES

A. Fasteners and Anchors:

1. Fasteners: Hot-dipped galvanized steel for high humidity and treated wood locations, unfinished steel elsewhere.

2. Drywall Screws: Bugle head, hardened steel, power driven type, length three times thickness of sheathing.

3. Anchors: Toggle bolt type for anchorage to hollow masonry.

B. Joist Hangers: Hot dipped galvanized steel, sized to suit framing conditions.

C. Building Paper: No. 15 asphalt felt.

2.08 FACTORY WOOD TREATMENT

A. Pressure Treatment of Lumber Above Grade: AWPA Treatment C2 using waterborne preservative to 0.25 pound per cubic foot retention.

1. Kiln dry after treatment to maximum moisture content of 19 percent.

2. Treat wood in contact with roofing, flashing, or waterproofing.

3. Treat wood in contact with masonry or concrete.

PART 3 EXECUTION

3.01 FRAMING INSTALLATION

A. Set structural members level, plumb, and true to line. Discard pieces with defects that would lower required strength or result in unacceptable appearance of exposed members.

B. Make provisions for temporary construction loads, and provide temporary bracing sufficient to maintain structure in true alignment and safe condition until completion of erection and installation of permanent bracing.

C. Install structural members full length without splices unless otherwise specifically detailed.

D. Comply with member sizes, spacing, and configurations indicated, and fastener size and spacing indicated, but not less than required by applicable codes and AFPA WCD 1 T11.

E. Install horizontal spanning members with crown edge up and not less than 1-1/2 inches of bearing at each end.

F. Construct double joist headers at floor and ceiling openings and under wall stud partitions that are parallel to floor joists; use metal joist hangers unless otherwise detailed.

G. Provide bridging at joists in excess of 8 feet span as detailed. Fit solid blocking at ends of members.

H. Frame openings with two or more studs at each jamb; support headers on cripple studs.

I. Provide miscellaneous members as indicated or as required to support finishes, fixtures, specialty items, and trim.

3.02 INSTALLATION OF ACCESSORIES AND MISCELLANEOUS WOOD

A. Place full width continuous sill flashings under framed walls on cementitious foundations. Lap flashing joints 4 inches and seal.

B. Coordinate installation of wood decking, wood chord metal joists, glue laminated structural units, prefabricated wood trusses, and plywood web joists.

C. Curb roof openings except where prefabricated curbs are provided. Form corners by alternating lapping side members.

D. Coordinate curb installation with installation of decking and support of deck openings.

3.03 INSTALLATION OF CONSTRUCTION PANELS

A. Roof Sheathing: Secure panels perpendicular to framing members, with ends staggered and sheet ends over firm bearing.

1. Use sheathing clips between roof framing members.

2. Provide solid edge blocking between sheets.

3. Nail panels to framing; staples are not permitted.

3.04 TOLERANCES

A. Framing Members: 1/4 inch from true position, maximum.

B. Variation from Plane (Other than Floors): 1/4 inch in 10 feet maximum, and 1/4 inch in 30 feet maximum.

END OF SECTION

DIVISION 07

MOISTURE PROTECTION

SECTION 07410

METAL ROOF, FASCIA AND SOFFIT PANELS

PART 1 GENERAL

1.01 SECTION INCLUDES

A. Manufactured metal panels for roofing, fascia, and soffits, with related flashings and accessory components.

B. Building paper back-up over wood sheathed roof.

1.02 RELATED SECTIONS

A. Section 07900 - Joint Sealers.

1.03 REFERENCES

A. ASTM A 653 - Standard Specification for Steel Sheets, Zinc-Coated (Galvanized) or Zinc-Iron Alloy-Coated (Galvannealed) by the Hot-Dip Process.

B. ASTM A 755 - Standard Specification for Steel Sheet, Metallic Coated by the Hot-Dip Process and Prepainted by the Coil Coating Process for Exterior Exposed Building Products.

C. ASTM D 226 - Standard Specification for Asphalt-Saturated Organic Felt Used in Roofing and Waterproofing.

D. Use latest edition of the above reference standards at the time of the project.

1.04 DESIGN REQUIREMENTS

A. Components: Design and size components to withstand dead and live loads caused by positive and negative wind pressure acting on roof as calculated in accordance with the Uniform Building Code and applicable local codes.

B. Movement: Accommodate movement within system without damage to components or deterioration of seals, movement within system; movement between system and perimeter components when subject to seasonal temperature cycling; dynamic loading and release of loads; and deflection of structural support framing.

C. Drainage: Provide positive drainage to exterior for moisture entering or condensation occurring within panel system.

D. Products: Provide continuity of thermal barrier at building enclosure elements.

1.05 SUBMITTALS

A. See Section 01300 - Administrative Requirements, for submittal procedures.

B. Shop Drawings: Indicate dimensions, layout, joints, construction details, methods of anchorage, and related details.

C. Samples: Submit one sample each of roof, fascia and soffit panels, 4 inch by 4 inch in size, illustrating finish color, sheen, and texture.

1.06 QUALITY ASSURANCE

A. Manufacturer: Company specializing in manufacturing the products specified in this section with minimum three years of documented experience.

B. Installer: Company specializing in performing the work of this section with minimum three years of experience.

1.07 DELIVERY, STORAGE, AND PROTECTION

A. Protect panels from accelerated weathering by removing or venting sheet plastic shipping wrap.

B. Store pre-finished material off ground and protected from weather. Prevent twisting, bending, or abrasion, and provide ventilation to stored materials. Slope metal sheets to ensure drainage.

C. Prevent contact with materials that may cause discoloration or staining of products.

1.08 PROJECT CONDITIONS

A. Coordinate the Work with installation of skylights, vents, and related components or materials.

1.09 WARRANTY

A. See Section 01780 - Closeout Submittals, for additional warranty requirements.

B. Correct defective work within a one-year period after Substantial Completion for degradation of panel finish, including color fading caused by exposure to weather.

C. Correct defective Work within a one-year period after Substantial Completion, including defects in water tightness and integrity of seals.

PART 2 PRODUCTS

2.01 MANUFACTURERS

A. Manufacturers:

1. MBCI.

2. Substitutions: See Section 01600 - Product Requirements.

B. Colors to be selected by Owner from manufacturer’s standard colors.

2.02 MANUFACTURED METAL PANELS

A. Roof Panel System: Preformed and pre-finished metal panel system of vertical rib profile; site assembled.

1. Roof panels shall be minimum 24 gauge thick.

2. Coating shall be “Kynar 500" of the manufacturer’s standard colors, as directed by the Engineer.

3. Panels shall have a UL 90 rating.

B. Exterior Panel:

1. Minimum 26-gauge thick pre-coated steel stock.

2. Beveled profile.

3. 1-5/8 inches high rib; 12-inch-wide panels.

4. Interlocking edges, filled with sealant.

C. Soffit Panel:

1. 26-gauge thick pre-coated steel.

2. Beveled rid profile in 12-inch-wide panels; lapped edges filled with sealant.

D. Internal and External Corners: Same material, thickness, and finish as exterior sheets; profile to suit system; shop cut and factory mitered to required angles. Mitered internal corners to be back braced with 26-gauge pre-coated sheet stock to maintain continuity of profile.

E. Expansion Joints: Same material, thickness and finish as exterior sheets; 26 gauge; manufacturer's standard brake formed type, of profile to suit system.

F. Trim: Same material, thickness and finish as exterior sheets; brake formed to required profiles.

G. Anchors: Galvanized steel.

2.03 EXTERIOR PANEL MATERIALS

A. Pre-coated Galvanized Steel Sheet: ASTM A 653, Commercial Steel (CS) or Forming Steel (FS), Coating Designation G90; shop pre-coated in accordance with ASTM A 755, with acrylic primer coat, silicone polyester top coat, and polyester wash-coat for panel back. Exposed Exterior Surfaces: Selected color

2.04 ACCESSORIES

A. Sealants: Specified in Section 07900. Manufacturer's standard type suitable for use with installation of system; non-staining; color as selected.

B. Fasteners: Manufacturer's standard type to suit application; with soft neoprene washers, steel, hot dip galvanized. Fastener cap same color as exterior panel.

C. Field Touch-up Paint: As recommended by panel manufacturer.

D. Bituminous Paint: Asphalt base.

E. Building Paper: ASTM D 226, Type I ("No. 15"), un-perforated asphalt felt.

2.05 FABRICATION

A. Form sections true to shape, accurate in size, square, and free from distortion or defects.

B. Form pieces in longest practicable lengths.

C. Form panels for standing seams.

D. Panel Profile: Beveled rid.

PART 3 EXECUTION

3.01 EXAMINATION

A. Verify that building framing members are ready to receive panels.

3.02 PREPARATION

A. Install 1 layer building paper horizontally on roof sheathing to receive panels.

B. Weather lap edges 6 inches and ends 6 inches, minimum.

C. Stagger vertical joints of each layer.

D. Securely nail in place.

3.03 INSTALLATION

A. Install panels on roofs, fascias, and soffits in accordance with manufacturer's instructions.

B. Protect surfaces in contact with cementitious materials and dissimilar metals with bituminous paint. Allow to dry prior to installation.

C. Fasten panels to structural supports; aligned, level, and plumb.

D. Locate joints over supports. Lap panel ends minimum 2 inches.

E. Provide expansion joints where required and as recommended by manufacturer.

F. Use concealed fasteners unless otherwise accepted by Engineer.

G. Seal joints to prevent weather penetration. Maintain neat appearance.

3.04 TOLERANCES

A. Maximum Offset from True Alignment Between Adjacent Members Butting or In Line: 1/16 inch.

B. Maximum Variation from Plane or Location Indicated on Drawings: 1/4 inch.

3.05 CLEANING

A. Remove site cuttings from finish surfaces.

B. Clean and wash pre-finished surfaces with mild soap and water; rinse with clean water.

END OF SECTION

SECTION 07620

SHEET METAL FLASHING AND TRIM

PART 1 GENERAL

1.01 SECTION INCLUDES

A. Flashings, counterflashing's, and fabricated sheet metal items.

B. Reglets and accessories.

1.02 RELATED SECTIONS

A. Section 07410 - Metal Roof, Fascia, and Soffit Panels: Roofing system.

B. Section 07900 - Joint Sealers.

1.03 REFERENCES

A. ASTM A 653 - Standard Specification for Steel Sheets, Zinc-Coated (Galvanized) or Zinc-Iron Alloy-Coated (Galvannealed) by the Hot-Dip Process.

B. ASTM D 226 - Standard Specification for Asphalt-Saturated Organic Felt Used in Roofing and Waterproofing.

C. ASTM D 4586 - Standard Specification for Asphalt Roof Cement, Asbestos-Free.

D. SMACNA (ASMM) - Architectural Sheet Metal Manual; Sheet Metal and Air Conditioning Contractors' National Association.

E. Use latest edition of the above reference standards at the time of the project.

1.04 SUBMITTALS

A. See Section 01300 - Administrative Requirements, for submittal procedures.

B. Shop Drawings: Indicate material profile, jointing pattern, jointing details, fastening methods, flashings, terminations, and installation details.

1.05 QUALITY ASSURANCE

A. Perform work in accordance with SMACNA Architectural Sheet Metal Manual requirements and standard details, except as otherwise indicated.

B. Maintain one copy of each document on site.

C. Fabricator and Installer Qualifications: Company specializing in sheet metal work with three years of documented experience.

1.06 DELIVERY, STORAGE, AND HANDLING

A. Stack material to prevent twisting, bending, and abrasion, and to provide ventilation. Slope metal sheets to ensure drainage.

B. Prevent contact with materials which may cause discoloration or staining.

PART 2 PRODUCTS

2.01 SHEET MATERIALS

A. Galvanized Steel: ASTM A 653, with G90/Z275 zinc coating; 0.02-inch-thick steel.

B. Pre-Finished Galvanized Steel: ASTM A 653, with G90/Z275 zinc coating; 0.02-inch core steel, shop pre-coated with modified silicone coating of color as selected.

2.02 ACCESSORIES

A. Fasteners: Galvanized steel, with soft neoprene washers.

B. Underlayment: ASTM D 226, organic roofing felt, Type I ("No. 15").

C. Primer: Zinc chromate type.

D. Protective Backing Paint: Zinc chromate alkyd.

E. Sealant: Type as specified in Section 07900.

F. Plastic Cement: ASTM D 4586, Type I.

2.03 FABRICATION

A. Form sections true to shape, accurate in size, square, and free from distortion or defects.

B. Form pieces in longest possible lengths.

C. Hem exposed edges on underside 1/2 inch; miter and seam corners.

D. Form material with flat lock seams, except where otherwise indicated. At moving joints, use sealed lapped, bayonet-type or interlocking hooked seams.

E. Fabricate corners from one piece with minimum 18-inch-long legs; seam for rigidity, seal with sealant.

F. Fabricate vertical faces with bottom edge formed outward 1/4 inch (6 mm) and hemmed to form drip.

G. Fabricate flashings to allow toe to extend 2 inches over roofing gravel. Return and brake edges.

PART 3 EXECUTION

3.01 EXAMINATION

A. Verify roof openings, curbs, pipes, sleeves, ducts, and vents through roof are solidly set, reglets in place, and nailing strips located.

B. Verify roofing termination and base flashings are in place, sealed, and secure.

3.02 PREPARATION

A. Install starter and edge strips, and cleats before starting installation.

B. Back paint concealed metal surfaces with protective backing paint to a minimum dry film thickness of 15 mil.

3.03 INSTALLATION

A. Secure flashings in place using concealed fasteners. Use exposed fasteners only where permitted.

B. Apply plastic cement compound between metal flashings and felt flashings.

C. Fit flashings tight in place. Make corners square, surfaces true and straight in planes, and lines accurate to profiles.

D. Seal metal joints watertight.

E. Secure gutters and downspouts in place using concealed fasteners.

F. Slope gutters 1/4 inch per foot minimum.

G. Connect downspouts to downspout boots. Seal connection watertight.

H. Set splash pads under downspouts.

3.04 FIELD QUALITY CONTROL

A. See Section 01400 - Quality Requirements, for field inspection requirements.

B. Inspection will involve surveillance of work during installation to ascertain compliance with specified requirements.

END OF SECTION

SECTION 07900

JOINT SEALERS

PART 1 GENERAL

1.01 SECTION INCLUDES

A. Sealants and joint backing.

B. Pre-Compressed foam sealers.

1.02 REFERENCES

A. ASTM C 834 - Standard Specification for Latex Sealants.

B. ASTM C 920 - Standard Specification for Elastomeric Joint Sealants.

C. ASTM C 1193 - Standard Guide for Use of Joint Sealants.

D. ASTM D 1056 - Standard Specification for Flexible Cellular Materials--Sponge or Expanded Rubber.

E. ASTM D 1565 - Standard Specification for Flexible Cellular Materials--Vinyl Chloride Polymers and Copolymers (Open-Cell Foam).

F. ASTM D 1667 - Standard Specification for Flexible Cellular Materials--Vinyl Chloride Polymers and Copolymers (Closed-Cell Foam).

G. ASTM D 2628 - Standard Specification for Preformed Polychloroprene Elastomeric Joint Seals for concrete Pavements.

H. Use latest edition of the above reference standards at the time of the project.

1.03 SUBMITTALS

A. See Section 01300 - Administrative Requirements, for submittal procedures.

B. Product Data: Provide data indicating sealant chemical characteristics.

C. Manufacturer's Installation Instructions: Indicate special procedures.

1.04 QUALITY ASSURANCE

A. Maintain one copy of each referenced document covering installation requirements on site.

B. Manufacturer Qualifications: Company specializing in manufacturing the Products specified in this section with minimum three years documented experience.

C. Applicator Qualifications: Company specializing in performing the work of this section with minimum three years experience.

1.05 ENVIRONMENTAL REQUIREMENTS

A. Maintain temperature and humidity recommended by the sealant manufacturer during and after installation.

1.06 COORDINATION

A. Coordinate the work with all sections referencing this section.

1.07 WARRANTY

A. See Section 01780 - Closeout Submittals, for additional warranty requirements.

B. Correct defective work within a one-year period after Date of Substantial Completion.

C. Warranty: Include coverage for installed sealants and accessories which fail to achieve watertight seal, exhibit loss of adhesion or cohesion, or do not cure.

PART 2 PRODUCTS

2.01 MANUFACTURERS

A. Silicone Sealants:

1. Tremco, Inc.

2. Substitutions: See Section 01600 - Product Requirements.

B. Polyurethane Sealants:

1. Tremco, Inc.

2. Substitutions: See Section 01600 - Product Requirements.

C. Acrylic Sealants:

1. Tremco, Inc.

2. Substitutions: See Section 01600 - Product Requirements.

D. Acrylic Emulsion Latex Sealants:

1. Tremco, Inc.

2. Substitutions: See Section 01600 - Product Requirements.

2.02 SEALANTS

A. General Purpose Exterior Sealant: Polyurethane; ASTM C 920, Grade NS, Class 25, Uses M, G, and A; single component.

1. Color: Standard colors matching finished surfaces.

2. Applications: Use for:
   a. Control, expansion, and soft joints in masonry.
   b. Joints between concrete and other materials.
   c. Joints between metal frames and other materials.
   d. Other exterior joints for which no other sealant is indicated.

B. General Purpose Interior Sealant: Acrylic emulsion latex; ASTM C 834, single component, paintable.

1. Color: Standard colors matching finished surfaces.

2. Applications: Use for:
   a. Interior wall and ceiling control joints.
   b. Joints between door and window frames and wall surfaces.
   c. Other interior joints for which no other type of sealant is indicated.

C. Interior Floor Joint Sealant: Polyurethane, self-leveling; ASTM C 920, Grade P, Class 25, Uses T, M and A; single component.

1. Approved by manufacturer for wide joints up to 1-1/2 inches.

2. Color: Standard colors matching finished surfaces.

3. Applications: Use for:
   a. Expansion joints in floors.

D. Concrete Paving Joint Sealant: Polyurethane, self-leveling; ASTM C 920, Class 25, Uses T, M and A; single component.

1. Color: Gray.

2. Applications: Use for:
   a. Joints in sidewalks and vehicular paving.

2.03 ACCESSORIES

A. Primer: Non-staining type, recommended by sealant manufacturer to suit application.

B. Joint Cleaner: Non-corrosive and non-staining type, recommended by sealant manufacturer; compatible with joint forming materials.

C. Joint Backing: Round foam rod compatible with sealant; ASTM D 1667, closed cell PVC; oversized 30 to 50 percent larger than joint width.

D. Bond Breaker: Pressure sensitive tape recommended by sealant manufacturer to suit application.

PART 3 EXECUTION

3.01 EXAMINATION

A. Verify that substrate surfaces are ready to receive work.

B. Verify that joint backing and release tapes are compatible with sealant.

3.02 PREPARATION

A. Remove loose materials and foreign matter which might impair adhesion of sealant.

B. Clean and prime joints in accordance with manufacturer's instructions.

C. Perform preparation in accordance with manufacturer's instructions and ASTM C 1193.

D. Protect elements surrounding the work of this section from damage or disfigurement.

3.03 INSTALLATION

A. Perform work in accordance with sealant manufacturer's requirements for preparation of surfaces and material installation instructions.

B. Perform installation in accordance with ASTM C 1193.

C. Measure joint dimensions and size joint backers to achieve width-to-depth ratio, neck dimension, and surface bond area as recommended by manufacturer, except where specific dimensions are indicated.

D. Install bond breaker where joint backing is not used.

E. Install sealant free of air pockets, foreign embedded matter, ridges, and sags.

F. Apply sealant within recommended application temperature ranges. Consult manufacturer when sealant cannot be applied within these temperature ranges.

G. Tool joints concave.

3.04 CLEANING

A Clean adjacent soiled surface.

3.05 PROTECTION OF FINISHED WORK

A. Protect sealants until cured.

END OF SECTION

DIVISION 08

DOORS

SECTION 08110

STEEL DOORS AND FRAMES

PART 1 GENERAL

1.01 SECTION INCLUDES

A. Steel doors and frames.

1.02 RELATED SECTIONS

A. Section 08710 - Door Hardware.

1.03 REFERENCES

A. ASTM A 366 - Standard Specification for Steel, Sheet, Carbon, Cold-Rolled, Commercial Quality.

B. ASTM A 569 - Standard Specification for Commercial Steel, Sheet and Strip, Carbon (0.15 Maximum Percent), Hot-Rolled.

C. ASTM A 591 - Standard Specification for Steel Sheet, Electrolytic Zinc-Coated, for Light Coating Mass Applications.

D. NFPA 80 - Standard for Fire Doors and Windows; National Fire Protection Association.

E. SDI 100 - Recommended Specifications Standard Steel Doors and Frames; Steel Door Institute; (ANSI/SDI-100).

F. SDI 105 - Recommended Erection Instructions for Steel frames; Steel Door Institute.

G. SDI 111 - Recommended Standard Details for Steel Doors & Frames; Steel Door Institute.

H. SDI 113 - Test Procedure and Acceptance Criteria for Apparent Thermal Performance of Steel Door and Frame Assemblies; Steel Door Institute.

I. UL (BMD) - Building Materials Directory; Underwriters Laboratories Inc.

J. Use latest edition of the above reference standards at the time of the project.

1.04 SUBMITTALS

A. See Section 01300 - Administrative Requirements, for submittal procedures.

B. Product Data: Provide manufacturer's standard details and catalog data demonstrating compliance with referenced standards; installation instructions.

C. Certificates:

1. Provide manufacturer's certification that products comply with referenced standards.

2. Provide evidence of manufacturer's membership in the Steel Door Institute.

D. Shop Drawings: Door, frame, and hardware schedule in accordance with SDI 111D.

1.05 QUALITY ASSURANCE

A. Manufacturer Qualifications: Provide all products from a single manufacturer who is a member of the Steel Door Institute.

1.06 DELIVERY, STORAGE, AND HANDLING

A. Protect products from moisture, construction traffic, and damage.

B. Store under cover. Do not use non-vented plastic or canvas shelters. Should wrappers become wet, remove immediately.

C. Place units on 4-inch-high wood sills or in a manner that will prevent rust or damage. Provide 1/4 inch space between doors to promote air circulation.

PART 2 PRODUCTS

2.01 MATERIALS

A. Steel Sheet for Doors and Frames:

1. Cold rolled steel: ASTM A 366.

2. Hot rolled steel: Pickled and oiled, ASTM A 569.

B. Steel Sheet for Anchors and Accessories: Electrolytically deposited zinc coated steel; ASTM A 591, coating Class B, minimum.

2.02 DOORS AND FRAMES

A. Comply with SDI 100.

B. Fire-Rated Openings: Comply with NFPA 80; UL listed.

1. Affix permanent labels attesting to fire resistance.

2. Provide manufacturer's certificate that oversized openings have been constructed in accordance with all other applicable requirements for labeled door construction.

C. Exterior Doors:

1. Provide insulated construction with U-value of at least 0.48 when tested in accordance with SDI 113.

2. Provide manufacturer's standard foam insulated core.

3. Steel stiffened grid core and stile and rail units are exempt from thermal rating requirements.

4. Where the double doors are indicated, the active door will have a standard lock and the inactive door will be held secure by flush bolts. The inactive door will be supplied with manufacturer’s standard lever extension flush bolts; with one installed in the top edge of the door and one installed in the bottom edge of the door. The flush bolts will be operated by levers to either open or set the flush bolts while the active door is open.

D. All Steel Doors: Grade II, Model 1 (heavy-duty, full flush design, 16-gauge frames).

E. Frames: Provide either knockdown field assembled or welded unit type frames unless otherwise indicated.

F. Louvers: Provide inserted louvers in accordance with SDI 111C for restroom doors, where indicated.

1. Fixed Louvers: Inverted "V" blade.

G. Finishing: Provide factory-finished units; colors as indicated on the drawings.

PART 3 EXECUTION

3.01 EXAMINATION

A. Verify that project conditions are suitable before beginning installation of frames.

1. For wrap-around frames, verify that completed openings are of correct size and thickness.

B. Correct unsatisfactory condition before preceding with installation.

3.02 INSTALLATION

A. Install frames in accordance with SDI 105.

B. Install doors plumb and in true alignment and fasten to achieve the maximum operational effectiveness and appearance of the unit. Maintain clearances specified in SDI 100 and NFPA 80 whichever is more restrictive.

C. Fill welded wrap-around frames in masonry construction with mortar as masonry is laid-up.

D. If additives are used in masonry or plaster work during cold weather, field coat the inside of steel frames with a bituminous compound to prevent corrosion.

3.03 ADJUST AND CLEAN

A. Adjust doors for proper operation, free from binding or other defects.

B. Clean and restore soiled surfaces. Remove scraps and debris, and leave site and a clean condition.

END OF SECTION

SECTION 08710

DOOR HARDWARE

PART 1 GENERAL

1.01 SECTION INCLUDES

A. Hardware for hollow steel doors.

B. Lock cylinders for doors for which hardware is specified in other sections.

C. Thresholds.

D. Weatherstripping, seals and door gaskets.

1.02 RELATED SECTIONS

A. Section 08110- Standard Steel Doors and Frames.

1.03 ALLOWANCES

A. See Section 01210 - Allowances, for allowances affecting this section.

1.04 REFERENCES

A. ANSI/CABO A117.1 - American National Standard for Buildings and Facilities - Providing Accessible and Usable Buildings and Facilities; Council of American Building Officials.

B. BHMA A156.1 - American National Standard for Butts and Hinges; Builders Hardware Manufacturers Association; (ANSI/BHMA A156.1).

C. BHMA A156.2 - American National Standard for Bored and Preassembled Locks & Latches; Builders Hardware Manufacturers Association; (ANSI/BHMA A156.2).

D. BHMA A156.3 - American National Standard for Exit Devices; Builders Hardware Manufacturers Association; (ANSI/BHMA A156.3).

E. BHMA A156.4 - American National Standard for Door Controls - Closers; Builders Hardware Manufacturers Association; (ANSI/BHMA A156.4).

F. BHMA A156.6 - American National Standard for Architectural Door Trim; Builders Hardware Manufacturers Association; (ANSI/BHMA A156.6).

G. BHMA A156.7 - American National Standard for Template Hinge Dimensions; Builders Hardware Manufacturers Association; (R1997) (ANSI/BHMA A156.7).

H. BHMA A156.13 - American National Standard for Mortise Locks & Latches; Builders Hardware Manufacturers Association; (ANSI/BHMA A156.13).

I. BHMA A156.18 - American National Standard for Materials and Finishes; Builders Hardware Manufacturers Association; (ANSI/BHMA A156.18).

J. BHMA A156.21 - American National Standard for Thresholds; Builders Hardware Manufacturers Association; (ANSI/BHMA A156.21).

K. DHI A115 Series - Specifications for Steel Doors and Frame Preparation for Hardware; Door and Hardware Institute.

L. DHI (LOCS) - Recommended Locations for Architectural Hardware for Standard Steel Doors and Frames; Door and Hardware Institute.

M. NFPA 101 - Code for Safety to Life from Fire in Buildings and Structures; National Fire Protection Association.

N. Use the latest edition of the above reference standards at the date of the project.

1.05 SUBMITTALS

A. See Section 01300 - Administrative Requirements, for submittal procedures.

B. Shop Drawings:

1. Indicate locations and mounting heights of each type of hardware, schedules, catalog cuts.

2. Submit manufacturer's parts lists, templates, and appurtenant information.

C. Manufacturer's Installation Instructions: Indicate special procedures, perimeter conditions requiring special attention, and related information.

D. Project Record Documents: Record actual locations of installed cylinders and their master key code.

E. Maintenance Data: Include data on operating hardware, lubrication requirements, and inspection procedures related to preventative maintenance.

F. Keys: Deliver with identifying tags to Owner.

G. Warranty: Submit manufacturer's warranty and ensure that forms have been completed in Owner 's name and registered with manufacturer.

1.06 QUALITY ASSURANCE

A. Perform work in accordance with the following requirements:

1. NFPA 101.

2. Maintain one copy on site.

B. Manufacturer Qualifications: Company specializing in manufacturing the products specified in this section with minimum three years of documented experience.

C. Hardware Supplier Qualifications: Company specializing in supplying commercial door hardware with three years of experience.

1.07 REGULATORY REQUIREMENTS

A. Conform to applicable code for requirements applicable to fire rated doors and frames.

1.08 DELIVERY, STORAGE, AND PROTECTION

A. Package hardware items individually; label and identify each package with door opening code to match hardware schedule.

1.09 COORDINATION

A. Coordinate the work with other directly affected sections involving manufacture or fabrication of internal reinforcement for door hardware.

B. Furnish templates for door and frame preparation.

1.10 WARRANTY

A. See Section 01780 - Closeout Submittals, for additional warranty requirements.

B. Provide five-year warranty for all door hardware.

1.11 MAINTENANCE PRODUCTS

A. Provide special wrenches and tools applicable to each different or special hardware component.

B. Provide maintenance tools and accessories supplied by hardware component manufacturer.

PART 2 PRODUCTS

2.01 MANUFACTURERS

A. Hinges:

1. Hager Companies.
2. Stanley Hardware.

B. Latch Sets:

1. Best Lock Corp.
2. Schlage Lock Co.
3. Yale Security, Inc.

C. Push / Pulls:

1. Hager Companies.

D. Cylindrical Locks:

1. Best Lock Corp.
2. Schlage Lock Co.
3. Yale Security, Inc.

E. Mortise Locks:

1. Best Lock Corp.
2. Schlage Lock Corp.
3. Yale Security, Inc.

F. Closers:

1. DORMA Door Controls, Inc.
2. Yale Security, Inc.

G. Protection Plates:

1. Hager Companies.

H. Substitutions: See Section 01600 - Product Requirements.

2.02 KEYING

A. Door Locks: Grand master keyed.

B. Supply keys in the following quantities:

1. Five master keys.

2. Two grand master keys.

3. Five change keys for each lock.

2.03 FINISHES

A. Finishes: Identified in schedule at end of section.

PART 3 EXECUTION

3.01 EXAMINATION

A. Verify that doors and frames are ready to receive work and dimensions are as indicated on shop drawings.

3.02 INSTALLATION

A. Install hardware in accordance with manufacturer's instructions.

B. Use templates provided by hardware item manufacturer.

C. Mounting heights for hardware from finished floor to center line of hardware item:

1. For steel doors and frames: Comply with DHI "Recommended Locations for Architectural Hardware for Steel Doors and Frames."

2. For steel doors and frames: See Section 08110.

3.03 FIELD QUALITY CONTROL

A. Field inspection and testing will be performed under provisions of Section 01400.

3.04 ADJUSTING

A. Adjust work under provisions of Section 01700.

B. Adjust hardware for smooth operation.

3.05 PROTECTION OF FINISHED WORK

A. Protect finished Work under provisions of Section 01700.

B. Do not permit adjacent work to damage hardware or finish.

3.06 SCHEDULE.

A. Pump Station Entrance Door: 4.0 ft wide x 6'-8" high hollow metal door; 2 required.

1. 1 1/2 pair hinges - BB1191, 4 1/2 x 4 1/2, 26D, NRP
2. 1 each lockset - H153, Plymouth, 26D, GMK
3. 1 each closer - P2810-4, SBL
4. 1 each threshold - 171A
5. 1 each weatherstrip - 303A
6. 1 each door bottom - 412 AN
7. 1 each stop - 302ES, 26D

B. Generator Room Entrance Double Door: 4 ft wide x 7.0 ft high hollow metal doors; 2 required.

1. 1 1/2 pair hinges per door - BB1191, 4 1/2 x 4 1/2, 26D, NRP
2. 1 each lockset - H153, Plymouth, 26D, GMK
3. 2 each closer - P2810-4, SBL
4. 1 each threshold - 171A
5. 1 each weatherstrip - 303A
6. 2 each door bottom - 412 AN
7. 2 each stop - 302ES, 26D

C. Treatment Room Entrance Door: 3.0 ft wide x 6'-8" high hollow metal door; 1 required.

1. 1 1/2 pair hinges - BB1191, 4 1/2 x 4 1/2, 26D, NRP
2. 1 each lockset - H153, Plymouth, 26D, GMK
3. 1 each closer - P2810-4, SBL
4. 1 each threshold - 171A
5. 1 each weatherstrip - 303A
6. 1 each door bottom - 412 AN
7. 1 each stop - 302ES, 26D

D. Toilet Room Entrance Door: 2.5 ft wide x 6’-8” high hollow metal door; 1 required.

1. 1 1/2 pair hinges - BB1191, 4 1/2 x 4 1/2, 26D, NRP
2. 1 each lockset - H153, Plymouth, 26D, GMK
3. 1 each closer - P2810-4, SBL
4. 1 each threshold - 171A
5. 1 each weatherstrip - 303A
6. 1 each door bottom - 412 AN
7. 1 each stop - 302ES, 26D

END OF SECTION

DIVISION 09

FINISHES

SECTION 09900

PAINTS AND COATINGS

PART 1 GENERAL

1.01 SECTION INCLUDES

A. Surface preparation.

B. Field application of paints and other coatings.

C. Painting materials and methods for conduit identification specified in Section 16075.

D. See Schedule - Surfaces to be Finished, at end of Section.

1.02 REFERENCES

A. ASTM D 16 - Standard Terminology Relating to Paint, Varnish, Lacquer, and Related Products.

B. ASTM D 4442 - Standard Test Methods for Direct Moisture Content Measurement of Wood and Wood-Base Materials.

C. PDCA (MAN) - Architectural Specification Manual; Painting and Decorating Contractors of America.

D. SSPC (PM1) - Steel Structures Painting Manual, Vol. 1, Good Painting Practice; Society for Protective Coatings.

E. SSPC (PM2) - Steel Structures Painting Manual, Vol. 2, Systems and Specifications; Society for Protective Coatings.

F. Use latest edition of the above reference standards at the time of the project.

1.03 DEFINITIONS

A. Conform to ASTM D 16 for interpretation of terms used in this section.

1.04 SUBMITTALS

A. See Section 01300 - Administrative Requirements, for submittal procedures.

B. Product Data: Provide data on all finishing products.

C. Samples: Submit two paper chip samples, 2 x 2 inch in size illustrating range of colors and textures available for each surface finishing product scheduled.

D. Manufacturer's Instructions: Indicate special surface preparation procedures.

E. Maintenance Data: Submit data on cleaning, touch-up, and repair of painted and coated surfaces.

1.05 QUALITY ASSURANCE

A. Manufacturer Qualifications: Company specializing in manufacturing the Products specified in this section with minimum three years documented experience.

B. Applicator Qualifications: Company specializing in performing the work of this section with minimum three years experience.

1.06 REGULATORY REQUIREMENTS

A. Conform to applicable code for flame and smoke rating requirements for products and finishes.

1.07 DELIVERY, STORAGE, AND PROTECTION

A. Deliver products to site in sealed and labeled containers; inspect to verify acceptability.

B. Container Label: Include manufacturer's name, type of paint, brand name, lot number, brand code, coverage, surface preparation, drying time, cleanup requirements, color designation, and instructions for mixing and reducing.

C. Paint Materials: Store at minimum ambient temperature of 45 degrees F and a maximum of 90 degrees F, in ventilated area, and as required by manufacturer's instructions.

1.08 ENVIRONMENTAL REQUIREMENTS

A. Do not apply materials when surface and ambient temperatures are outside the temperature ranges required by the paint product manufacturer.

B. Do not apply exterior coatings during rain or snow, or when relative humidity is outside the humidity ranges required by the paint product manufacturer.

C. Minimum Application Temperatures for Latex Paints: 45 degrees F for interiors; 50 degrees F for exterior; unless required otherwise by manufacturer's instructions.

D. Provide lighting level of 80 foot-candles measured mid-height at substrate surface.

1.09 EXTRA MATERIALS

A. See Section 01600 - Product Requirements, for additional provisions.

B. Supply 1 gallon of each color; store where directed.

C. Label each container with color in addition to the manufacturer's label.

PART 2 PRODUCTS

2.01 MANUFACTURERS

A. Paints:

1. Benjamin Moore & Co.

2. Devoe Coatings

3. Sherwin-Williams Co.

B. Substitutions: See Section 01600 - Product Requirements.

2.02 PAINTS AND COATINGS - GENERAL

A. Paints and Coatings: Ready mixed, except field-catalyzed coatings. Prepare pigments:

1. To a soft paste consistency, capable of being readily and uniformly dispersed to a homogeneous coating.

2. For good flow and brushing properties.

3. Capable of drying or curing free of streaks or sags.

B. Colors to be selected by Owner from manufacturer's standard colors.

2.03 PAINT SYSTEMS - EXTERIOR

A. Paint WE-OP-3A - Wood, Opaque, Alkyd, 3 Coat:

1. One coat of alkyd primer sealer.

2. Semi-gloss: Two coats of alkyd enamel.

B. Paint WE-OP-3L - Wood, Opaque, Latex, 3 Coat:

1. One coat of latex primer sealer.

2. Semi-gloss: Two coats of latex enamel.

C. Paint ME-OP-3A - Ferrous Metals, Unprimed, Alkyd, 3 Coat:

1. One coat of alkyd primer.

2. Semi-gloss: Two coats of alkyd enamel.

D. Paint ME-OP-3L - Ferrous Metals, Unprimed, Latex, 3 Coat:

1. One coat of latex primer.

2. Semi-gloss: Two coats of latex enamel.

E. Paint ME-OP-2A - Ferrous Metals, Primed, Alkyd, 2 Coat:

1. Touch-up with zinc chromate primer.

2. Semi-gloss: Two coats of alkyd enamel.

F. Paint ME-OP-2L - Ferrous Metals, Primed, Latex, 2 Coat:

1. Touch-up with zinc chromate primer.

2. Semi-gloss: Two coats of latex enamel.

G. Paint MgE-OP-3A - Galvanized Metals, Alkyd, 3 Coat:

1. One coat galvanize primer.

2. Semi-gloss: Two coats of alkyd enamel.

H. Paint MgE-OP-3L - Galvanized Metals, Latex, 3 Coat:

1. One coat galvanize primer.

2. Semi-gloss: Two coats of latex enamel.

2.04 PAINT SYSTEMS - INTERIOR

A. Paint WI-OP-3A - Wood, Opaque, Alkyd, 3 Coat:

1. One coat alkyd primer sealer.

2. Semi-gloss: Two coats of alkyd enamel.

B. Paint WI-OP-3L - Wood, Opaque, Latex, 3 Coat:

1. One coat of latex primer sealer.

2. Semi-gloss: Two coats of latex enamel.

C. Paint CI-OP-3A - Concrete/Masonry, Opaque, Alkyd, 3 Coat:

1. One coat of block filler.

2. Semi-gloss: Two coats of alkyd enamel.

D. Paint CI-OP-3L - Concrete/Masonry, Opaque, Latex, 3 Coat:

1. One coat of block filler.

2. Semi-gloss: Two coats of latex enamel.

E. Paint MI-OP-3A - Ferrous Metals, Unprimed, Alkyd, 3 Coat:

1. One coat of alkyd primer.

2. Semi-gloss: Two coats of alkyd enamel.

F. Paint MI-OP-3L - Ferrous Metals, Unprimed, Latex, 3 Coat:

1. One coat of latex primer.

2. Semi-gloss: Two coats of latex enamel.

G. Paint MgI-OP-3A - Galvanized Metals, Alkyd, 3 Coat:

1. One coat galvanize primer.

2. Semi-gloss: Two coats of alkyd enamel.

H. Paint MgI-OP-3L - Galvanized Metals, Latex, 3 Coat:

1. One coat galvanize primer.

2. Semi-gloss: Two coats of latex enamel.

I. Paint GI-OP-3A - Gypsum Board, Alkyd, 3 Coat:

1. One coat of alkyd primer sealer.

2. Semi-gloss: Two coats of alkyd enamel.

J. Paint GI-OP-3L - Gypsum Board, Latex, 3 Coat:

1. One coat of alkyd primer sealer.

2. Semi-gloss: Two coats of latex enamel.

2.05 ACCESSORY MATERIALS

A. Accessory Materials: Linseed oil, shellac, turpentine, paint thinners and other materials not specifically indicated but required to achieve the finishes specified; commercial quality.

B. Patching Material: Latex filler.

C. Fastener Head Cover Material: Latex filler.

PART 3 EXECUTION

3.01 EXAMINATION

A. Verify that surfaces are ready to receive Work as instructed by the product manufacturer.

B. Examine surfaces scheduled to be finished prior to commencement of work. Report any condition that may potentially affect proper application.

C. Test shop-applied primer for compatibility with subsequent cover materials.

D. Measure moisture content of surfaces using an electronic moisture meter. Do not apply finishes unless moisture content of surfaces is below the following maximums:

1. Gypsum Wallboard: 12 percent.

2. Masonry, Concrete, and Concrete Unit Masonry: 12 percent.

3. Interior Wood: 15 percent, measured in accordance with ASTM D 4442.

4. Exterior Wood: 15 percent, measured in accordance with ASTM D 4442.

3.02 PREPARATION

A. Surface Appurtenances: Remove or mask electrical plates, hardware, light fixture trim, escutcheons, and fittings prior to preparing surfaces or finishing.

B. Surfaces: Correct defects and clean surfaces which affect work of this section. Remove or repair existing coatings that exhibit surface defects.

C. Marks: Seal with shellac those which may bleed through surface finishes.

D. Impervious Surfaces: Remove mildew by scrubbing with solution of tetra-sodium phosphate and bleach. Rinse with clean water and allow surface to dry.

E. Concrete and Unit Masonry Surfaces to be Painted: Remove dirt, loose mortar, scale, salt or alkali powder, and other foreign matter. Remove oil and grease with a solution of tri-sodium phosphate; rinse well and allow to dry. Remove stains caused by weathering of corroding metals with a solution of sodium metasilicate after thoroughly wetting with water. Allow to dry.

F. Gypsum Board Surfaces to be Painted: Fill minor defects with filler compound. Spot prime defects after repair.

G. Galvanized Surfaces to be Painted: Remove surface contamination and oils and wash with solvent. Apply coat of etching primer.

H. Uncoated Steel and Iron Surfaces to be Painted: Remove grease, mill scale, weld splatter, dirt, and rust. Where heavy coatings of scale are evident, remove by hand wire brushing or sandblasting; clean by washing with solvent. Apply a treatment of phosphoric acid solution, ensuring weld joints, bolts, and nuts are similarly cleaned. Prime paint entire surface; spot prime after repairs.

I. Shop-Primed Steel Surfaces to be Finish Painted: Sand and scrape to remove loose primer and rust. Feather edges to make touch-up patches inconspicuous. Clean surfaces with solvent. Prime bare steel surfaces. Re-prime entire shop-primed item.

J. Interior Wood Items to Receive Opaque Finish: Wipe off dust and grit prior to priming. Seal knots, pitch streaks, and sappy sections with sealer. Fill nail holes and cracks after primer has dried; sand between coats. Back prime concealed surfaces before installation.

K. Exterior Wood to Receive Opaque Finish: Remove dust, grit, and foreign matter. Seal knots, pitch streaks, and sappy sections. Fill nail holes with tinted exterior calking compound after prime coat has been applied. Back prime concealed surfaces before installation.

L. Exterior Wood to Receive Transparent Finish: Remove dust, grit, and foreign matter; seal knots, pitch streaks, and sappy sections with sealer. Fill nail holes with tinted exterior calking compound after sealer has been applied. Prime concealed surfaces.

M. Metal Doors to be Painted: Prime metal door top and bottom edge surfaces.

3.03 APPLICATION

A. Apply products in accordance with manufacturer's instructions.

B. Where adjacent sealant is to be painted, do not apply finish coats until sealant is applied.

C. Do not apply finishes to surfaces that are not dry. Allow applied coats to dry before next coat is applied.

D. Apply each coat to uniform appearance. Apply each coat of paint slightly darker than preceding coat unless otherwise approved.

E. Sand wood surfaces lightly between coats to achieve required finish.

F. Vacuum clean surfaces of loose particles. Use tack cloth to remove dust and particles just prior to applying next coat.

G. Where clear finishes are required, tint fillers to match wood. Work fillers into the grain before set. Wipe excess from surface.

3.04 FINISHING MECHANICAL AND ELECTRICAL EQUIPMENT

A. Refer to Section 15075 and Section 16075 for schedule of color coding of equipment, duct work, piping, and conduit.

B. Paint shop-primed equipment, where indicated.

C. Remove unfinished louvers, grilles, covers, and access panels on mechanical and electrical components and paint separately.

D. Finish equipment, piping, conduit, and exposed duct work in utility areas in colors according to the color coding scheme indicated.

E. Reinstall electrical cover plates, hardware, light fixture trim, escutcheons, and fittings removed prior to finishing.

3.05 FIELD QUALITY CONTROL

A. See Section 01400 - Quality Requirements, for general requirements for field inspection.

B. Owner will provide field inspection.

3.06 CLEANING

A. Collect waste material which may constitute a fire hazard, place in closed metal containers, and remove daily from site.

3.07 SCHEDULE - SURFACES TO BE FINISHED

A. Do Not Paint or Finish the Following Items:

1. Items fully factory-finished unless specifically noted.

2. Fire rating labels, equipment serial number and capacity labels.

B. Paint the surfaces described below under Schedule - Paint Systems.

C. Mechanical and Electrical: Use paint systems defined for the substrates to be finished.

1. Paint all insulated and exposed pipes occurring in finished areas to match background surfaces, unless otherwise indicated.

2. Paint shop-primed items occurring in finished areas.

3.08 SCHEDULE - PAINT SYSTEMS

A. Gypsum Board: Finish all surfaces exposed to view.

1. Interior Ceilings and Bulkheads: GI-OP-3L, flat.

B. Wood: Finish all surfaces exposed to view.

1. Exterior trim and frames: WE-OP-3A.

2. Interior trim and frames: WI-OP-3A, semi-gloss.

3. Interior timbers: WI-TR-S, satin.

C. Steel Doors and Frames: Finish all surfaces exposed to view; MI-OP-3A, gloss.

D. Steel Fabrications: Finish all surfaces exposed to view.

1. Exterior: ME-OP-3A, gloss; finish all surfaces, including concealed surfaces, before installation.

2. Interior: MI-OP-3L, gloss.

E. Shop-Primed Metal Items: Finish all surfaces exposed to view.

END OF SECTION

SECTION 09965

GRAFFITI-RESISTANT COATINGS

PART 1 GENERAL

1.01 SECTION INCLUDES

A. Graffiti-resistant coatings for exterior elevations.

B. Pigmented coatings and graffiti-resistant coatings for exterior elevations.

C. Graffiti-resistant coatings for interior surfaces.

1.02 RELATED SECTIONS

A. Section 03300 - Cast-In-Place Concrete.

B. Section 07900 - Joint Sealers.

C. Section 09900 - Paints and Coatings.

1.03 SUBMITTALS

A. See Section 01300 - Administrative Requirements, for submittal procedures.

B. Product Data: Manufacturer's current technical data sheets for installation requirements, application procedures, and coverage rates.

C. Before starting work, submit estimated quantities of each product required for the work specified herein.

1.04 QUALITY ASSURANCE

A. Manufacturer's Representative shall be available to make recommendations specific to project, substrate, coating appearance, and cleaning options.

1.05 DELIVERY, STORAGE, AND HANDLING

A. Deliver materials in original sealed containers, clearly marked with manufacturer's name, type of material, and batch number.

B. Inspect the materials upon delivery to assure that specified products have been received.

C. Protect materials from the elements. Keep in original unopened container to prevent contamination by foreign materials.

D. Use all means necessary to protect material before, during, and after installation, and to protect work of other trades.

PART 2 PRODUCTS

2.01 MANUFACTURERS

A. Acceptable Manufacturer: Rainguard Products Company; 3471 Via Lido, Suite 213; Newport Beach, CA 92663. ASD. Tel: (888) 765-7070; Fax: (949) 675-3450; Website: www.rainguard.com

B. Substitutions: See Section 01600 - Product Requirements.

2.02 MATERIALS

A. Pigmented Coating: Rainguard "Color-Lok" or "Tec-Top."

B. Graffiti-Resistant Coating: Rainguard "Vandl-Guard."

C. Graffiti-Resistant Coating: Rainguard "Vandl-Top."

PART 3 EXECUTION

3.01 EXAMINATION

A. Verify that surfaces to be coated are in proper condition.

1. New masonry and cement plaster: Cured 30 days before application.

2. Painted or coated surfaces: Cured 30 days before application.

3. Substrate moisture content: No higher than 15 percent as registered on an electronic moisture meter.

B. Verify that surfaces are structurally sound.

3.02 PREPARATION

A. Thoroughly clean substrates of foreign substances, such as dust, dirt, grime, oils, scale, rust, silicones, curing compounds, alkali, acid residues, and other foreign matter.

B. Protect work of other trades against damage by coating and finish work.

3.03 APPLICATION

A. Apply materials in not less than the number of coats and coverage rates as recommended in manufacturer's technical data sheets.

B. Apply materials when substrate surface temperature is between 45- and 90-degrees F. Do not apply in direct sunlight.

C. Allow each coating to dry and cure before applying subsequent coats.

D. Achieve a uniform pinhole free, continuous film when applying graffiti-resistant coatings.

3.04 FIELD QUALITY CONTROL

A. Manufacturer's Representative shall inspect all coated surfaces after work is complete to verify proper application.

3.05 ADJUSTING AND CLEANING

A. If damage occurs, immediately make all repairs and replacements necessary at no additional cost to Owner.

B. During process of work, remove discarded coating materials, rubbish, cans, and rags at end of each workday.

C. Correct any damage by cleaning, repairing or replacing, and recoating, as acceptable to Engineer.

END OF SECTION

DIVISION 10

SPECIALTIES

SECTION 10210

WALL LOUVERS

PART 1 GENERAL

1.01 SECTION INCLUDES

A. Louvers, frames, and accessories.

1.02 RELATED SECTIONS

A. Section 07900 - Joint Sealers.

B. Section 09900 - Paints and Coatings: Field painting.

1.03 REFERENCES

A. AMCA 511 - Certified Ratings Program for Air Control Devices; Air Movement and Control Association International, Inc.

B. ASTM A 653/A 653M - Standard Specification for Steel Sheets, Zinc-Coated (Galvanized) or Zinc Iron Alloy-Coated (Galvannealed) by the Hot-Dip Process.

C. Use the latest edition of the above reference standards at time of the project.

1.04 SUBMITTALS

A. See Section 01300 - Administrative Requirements, for submittal procedures.

B. Test Reports: Independent agency reports showing compliance with specified performance criteria.

C. Manufacturer's Certificate: Certify that products meet or exceed specified requirements.

1.05 PROJECT CONDITIONS

A. Coordinate work of this section with installation of metal siding.

1.06 WARRANTY

A. See Section 01780 - Closeout Submittals, for additional warranty requirements.

B. Provide twenty-year manufacturer warranty against distortion, metal degradation, and failure of connections.

1. Finish: Include coverage against degradation of exterior finish.

PART 2 PRODUCTS

2.01 LOUVERS

A. Stationary Louvers: Horizontal blade, formed galvanized steel sheet construction.

1. Free Area: 50 percent, minimum.

2. Blades: Straight.

3. Frame: 4 inches deep, channel profile; corner joints mitered and welded, with continuous recessed caulking channel each side.

4. Metal Thickness: Frame 0.06 inch; blades 0.06 inch.

5. Finish: Color anodized; finish welded units finished fabrication.

6. Color: As selected from manufacturer's standard colors.

2.02 MATERIALS

A. Steel Sheet: ASTM A 653/A 653M, galvanized to G90/Z275 zinc coating.

B. Bird Screen: Interwoven wire mesh of steel, 0.063-inch diameter wire, 1/2-inch open weave, diagonal design.

C. Insect Screen: size to match opening aluminum mesh.

2.03 ACCESSORIES

A. Screens: Frame of same material as louver, with reinforced corners; removable, screw attached; installed on inside face of louver frame.

B. Fasteners and Anchors: Galvanized steel.

PART 3 EXECUTION

3.01 EXAMINATION

A. Verify that prepared openings and flashings are ready to receive work and opening dimensions are as indicated on shop drawings.

B. Verify that field measurements are as indicated.

3.02 INSTALLATION

A. Install louver assembly in accordance with manufacturer's instructions.

B. Install louvers level and plumb.

C. Install flashings and align louver assembly to ensure moisture shed from flashings and diversion of moisture to exterior.

D. Secure louver frames in openings with exposed fasteners.

E. Install perimeter sealant and backing rod in accordance with Section 07900.

3.03 CLEANING

A. Strip protective finish coverings.

B. Clean surfaces and components.

END OF SECTION

DIVISION 11

EQUIPMENT

SECTION 11200

PUMPS

PART 1 GENERAL

1.01 SECTION INCLUDES

A. Vertical turbine pumps, motors, controllers, and appurtenant items.

1.02 RELATED SECTIONS

A. Section 16123 - Building Wire and Cable.

B. Section 16131 - Conduit.

C. Section 16155 - Equipment Wiring.

D. Section 16423 - Enclosed Motor Controllers.

E. Section 16425 - Variable Frequency Controllers.

1.03 PUMP STANDARDS

A. The standards of the National Association of Pump Manufacturers shall be considered as minimum standards for determining shaft size, bearing size, material specifications, and related items.

1.04 SUBMITTALS

A. See Section 01300 - Administrative Requirements, for submittal procedures.

B. Product Data: Provide data on pumps, motors, controllers, discharge heads, and appurtenant items.

C. Shop Drawings: Indicate descriptive information on pumps, discharge heads, motors, controllers, and appurtenant items.

1. Provide overall operating performance requirements of pumps as defined in the Hydraulic Institute Standards and ANSI/AWWA E101-88.
   a. Performance data curves (adjusted for operating speed) showing head, capacity, horsepower demand, and pump efficiency over the entire operating range of the pump, from shutoff to maximum capacity.
   b. Performance data curves showing head, capacity, horsepower demand, overall efficiency, and minimum submergence required at the specified design point.

2. Provide complete and detailed information regarding installation of pumps.
   a. Identify and describe in detail any installation requirements or operating conditions which are critical to the safe and reliable operation of the pumps.

3. State any deviations from the specified requirements.

D. Manufacturer's Installation Instructions: Indicate special installation procedures.

E. Operation Data: Provide complete operating manuals.

F. Maintenance Data: Provide maintenance instructions, maintenance schedules, and related items.

1.05 QUALITY ASSURANCE

A. Manufacturer Qualifications: Company specializing in manufacturing the products specified in this Section with minimum five years documented experience.

B. Installer Qualifications: Company specializing in performing the work of this section with minimum five years of experience.

1.06 REGULATORY REQUIREMENTS

A. Conform to applicable codes for pumps, motors and associated equipment.

1.07 SUPERVISION OF INSTALLATION

A. Contractor shall provide factory-trained service technicians to completely check the installations of the vertical turbine pumps; and to assist during the 8-hour and 7-day tests described herein for the pumps.

1.08 WARRANTY

A. See Section 01780 - Closeout Submittals, for additional warranty requirements.

1.09 WARRANTY REPAIRS

A. After the pumps have been in operation for at least ten months and less than one year, and at other times during the guarantee (warranty) period when the Engineer determines that the pumps are not operating properly, the service technicians shall again inspect and test the equipment.

B. If any defects are found in any of the pumps or related equipment, resulting from faulty materials or installations, and not due to normal wear and tear, the Contractor shall make all repairs and adjustments required; and shall replace defective materials and equipment with new materials and equipment as required.

PART 2 PRODUCTS

2.01 PUMP INSTALLATIONS

A. pump installations, with motors mounted on pump discharge heads, shall include pumps, electric motors, pipe columns and line shafts, pump discharge heads, strainers, power cables, motor starters and all required accessories; as described herein and as indicated on the drawings.

B. Pumps shall be capable of continuous operation while pumping untreated ground water.

C. The variable frequency drive (VFD) shall be supplied by the pump manufacturer.

2.02 MANUFACTURERS

A. The manufacturers of equipment described herein shall provide documentation that they have at least five similar installations which have been in service for a period of five years or longer; and shall provide description of projects, contact name, and phone numbers for these installations to the Engineer at the time of bidding.

B. The manufacturer shall have factory trained service personnel permanently located within 100 miles of the installation.

C. pumps to be acceptable shall be equal in quality, but not restricted to, those manufactured by GRUNFOS Pumps, or other acceptable equals.

2.03 OPERATING CONDITIONS

A. **PUMP A** (TWO PUMPS)

1.	Total Pump Head excluding pump and column losses	150 feet
2.	Nominal Pump Capacity:	20 gpm
3.	Motor Size:	5 HP (minimum)
4.	Pump Efficiency:	78 % (minimum)

B. **PUMP B** (ONE PUMP-UL LISTED FIRE PUMP REQ'D)

5.	Total Pump Head excluding pump and column losses	120 feet
6.	Nominal Pump Capacity:	1500 gpm
7.	Motor Size:	75 HP (minimum)
8.	Pump Efficiency:	78 % (minimum)

2.04 PUMPS

A. Pumps shall be designed for the installation indicated on the drawings and as described herein. The total dynamic pumping head is the difference between the suction and discharge pressure. The pump shall operate with maximum efficiency at the design total dynamic head.

2.05 PUMP DISCHARGE HEADS

A. Pump discharge heads shall be of the manufacturer's standard design, as indicated on the drawings, of close grained cast iron, ASTM A48, Class 30, free of sand holes and other defects, accurately machined. As an alternate, fabricated carbon steel discharge heads will be acceptable.

B. Discharge flange shall be machined and drilled to ANSI standards for size indicated on drawings. The flange pressure rating shall be a minimum of 150% of the Total Dynamic Head shown in the “Operating Conditions” on this section of the specifications.

C. The drive base diameter (BD) shall be as required to interface with the driver (motor) bolt pattern; but not less than 16-1/2 inches.

D. The discharge head shall be equipped with a stuffing box rated at 300 psi, minimum. The packing box shall contain no less than 6 graphite fiberglass packing rings and 2 ASTM B584GDC83600 lantern rings. Sealing between the stuffing box and the discharge head and the plate and shaft enclosing tube shall be accomplished by means of “O” rings.

E. The head shaft shall be of ASTM A276GR416 stainless steel, which shall not exceed 10 feet in length. Impeller adjustment shall be provided at the motor shaft by means of a nut located on the top of the motor.

F. Discharge heads shall have pipe taps for vent, air line, and electrode.

2.06 PUMP MOTOR

A. The electric motors shall be drip-proof, vertical hollow shaft type; premium efficiency, three phase, 60 Hertz, 480 volts AC power, P base, squirrel case, shaft-grounded, induction design. Motor shall be designed to operate at 1760 rpm.

B. Minimum full load efficiency and power factor shall be as shown by US Electric Motor type. Enclosure shall meet NEMA weather protected type 1 design with stainless steel screens to prevent entrance of rodents.

C. Motors shall have Class B or Class F insulation with temperature rise as specified by NEMA standards for class of insulation used and shall have a 1.15 service factor. The motors shall be elevation nameplate adjusted for the elevation of the project site.

D. Thrust bearings shall have ample capacity to handle the weight of all rotating parts and the continuous down thrust as specified by the pump manufacturer with an AFBMA B-10, one-year minimum or five-year average life under design conditions. Provisions shall be made for momentary up-thrust equal to 30% of rated down thrust.

E. The motor rating shall be such that at design it will not be loaded beyond nameplate rating; and at no place on the pump curve shall the loading exceed the service factor.

F. Manufacturers shall be U.S. Electric Motors, General Electric Motors, or acceptable equals.

2.08 MOTOR CONTROLLERS

A. Motor controllers shall be full voltage, non-reversing controllers in a NEMA 1 enclosures for 480 volts, 3 phase, 60 Hertz AC service power; with isolated compartments for high and low volt-age. Controllers shall have a three pole draw out contactor assembly, sized as required, with three current limiting power fuses; control transformer, sized as required, with primary fuses; and control circuit contacts, two form C. Controllers shall have provisions for “soft-start” operation of motors. Where indicated, controllers shall be variable frequency drives as described in Section ELECTRICAL.

B. The low voltage control shall contain: control circuit fuse; test circuit; three overload relays, externally reset; contactor control cable; start and stop push buttons; and electric door interlock.

C. Controllers shall have three current transformers with load cable termination pads and service tray to roll contactors out of enclosure. Controllers shall meet NEMA Standard ICS-2-324 and ANSI Standard C197. Controllers shall provide low voltage release and running protection on all three phases; H-O-A selector switch; provisions for future automatic controls; and phase protection relays. Controllers shall have by-pass contactors so motors can start-up with soft start, then switch to motor starter after motor reaches full speed. Controllers shall include power factor correction capacitors as indicated on the drawings.

D. Controllers shall be “Pump Smart” Control Systems as manufactured by ITT Company. Soft starts shall be Benshaw Micro Series Soft Starts, or acceptable equal.

1. Controllers shall have torque-based pump protection to detect dry run, minimum flow and runout conditions.

2. Controllers shall have pump wear monitors to periodically monitor pump performance and issue warnings when pump wear has reduced pump performance; and also, shall monitor and react to excessive bearing housing vibrations and temperature excursions with 4-20mA transmitters.

2.09 ACCESSORIES

A. Pressure Control Switches. Operation of the pump shall be controlled by the City’s SCADA system based on water level in storage ponds. Pressure transducer switches shall be installed where and as directed by the Engineer.

B. High Pressure Controls. High pressure cut-off switches shall be furnished and installed inside of the motor controller. The pressure switches shall be set to stop the pump when pressures in the pump discharge lines reach a pre-set point.

C. Liquid Level Control. Furnish and install a INW PS98i pressure transducer inside of the well, at the top of the pump bowl assembly. Furnish and install a 1-1/4-inch, Schedule 80 PVC, ASTM F480, sounder tube, of sufficient length to extend from the discharge head base flange to the top of the bowl assembly. The tube shall be strapped to the column pipe. The pressure transducer shall be set to stop the well pump when the water level in the well reaches the top of the pump bowls.

D. Valve Control Relays. Control relays shall control the operation of the pump control valve. When the pump

is started, the control relays shall energize solenoid valves on the control valve to open the valves at pre-set rate. When the pump is shut down, the control relays shall de-energize the solenoid valves on the control valve to close the valve.

PART 3 EXECUTION

3.01 EXAMINATION

A. Verify that well pump house plumbing system has been installed according to design drawings.

3.02 INSTALLATION - PUMP

A. The elevation of the pump flange shall be set, as indicated and as required, to conform to the plumbing inside of the booster pump station. After the pump discharge head has been fabricated, it shall be measured in the field to determine the actual elevation required for the pump flange. The flange for the pump can shall be faced for, and provided with, a gasket between it and the discharge head.

B. The pumps, motors, pump discharge heads, pipe column assemblies, and accessories, shall be installed where and as indicated on the drawings; in accordance with manufacturer's shop drawings, written instructions and recommendations; and as specified herein.

C. Shop and field painting shall be done in accordance with Section 09900.

3.03 INSTALLATION - MOTOR CONTROLLERS

A. Motor controllers shall be installed inside of the pump station, where and as indicated; and wiring shall be installed in conduit from junction boxes at the pump discharge heads to the motor controllers, as required; all as described in Section ELECTRICAL WORK and as directed by the Engineer.

B. Controllers shall be connected to the District’s SCADA system as required and as directed.

3.04 INSTALLATION - ACCESSORIES

A. Install all accessories in accordance with component manufacturer's written instructions and recommendations.

3.05 SUPERVISION OF INSTALLATION.

A. Contractor shall provide a factory-trained service technician to completely check the installation of the vertical turbine pumps; and to assist during the 8-hour and 7-day tests described herein.

3.06 START-UP AND TESTING

A. After installation of the vertical turbine pump is completed and at such time as the Engineer may direct, the Contractor shall conduct an operating test of the pump for acceptance of the work. The test shall be performed in the presence of the Engineer or his authorized representative.

1. Factory Supervision. Contractor shall provide the services of a factory-trained technician to completely check the pumps for proper installation; to assist in start-up and testing; and to instruct the Owner's personnel in the correct operation and maintenance procedures. The service technician shall furnish all test equipment related to the start-up and testing of the pump installation.

2. Pump Start-Up. Contractor shall furnish and apply all lubricants, as recommended by the manufacturer; and shall furnish all gauges and other test equipment. Prior to pump start-up, the service technician shall check and verify that the pumps and related equipment are properly installed; and the Contractor shall make any corrections or adjustments required. At the time of start-up, operating instructions and maintenance procedures shall be thoroughly explained to operating personnel. After the initial start-up, the technician shall record operating data, as recommended by the pump manufacturer, and report the information to the Engineer, to demonstrate satisfactory operation.

3. Tests. Contractor shall furnish all gauges and other test equipment required for obtaining and recording test data during both an 8-hour test operation by the Contractor and a 7-day test conducted by the Engineer. The Owner will furnish the necessary power.
   a. 8-Hour Test. Following start-up, vertical turbine pumps shall be run for an 8-hour period to demonstrate proper operation of the equipment. The following test data shall be recorded at not to exceed hourly intervals, and furnished to the Engineer in an acceptable format.
      (1) Electrical. Amperes, voltage, temperature of the pump motor; transformer amperage, voltage, temperature, noise level; motor controller temperature, feeder wire temperature, amperage, voltage and ambient temperature.
      (2) Pumps. Pressure at discharge, delivery rate; and static level and draw-down level of well.
   b. 7-Day Test. At such time as work under this project is completed and prior to final acceptance of the work, the Engineer, with the assistance of operating personnel, will test the pumping system by operating the system under actual operating conditions for a period not to exceed seven (7) days.
      (1) Test Data. Test data observed shall be as specified for the 8-hour test; and shall be recorded at not to exceed 24-hour intervals.

4. Defects. Any defects in equipment or materials furnished by the Contractor which become evident during testing, shall be corrected by the Contractor at his expense; with no additional cost to the Owner. If corrections are required during the testing, the Engineer may require that the testing be repeated for the specified period.

END OF SECTION

SECTION 11210

ELECTRIC PUMP MOTORS

PART 1 GENERAL

1.01 SECTION INCLUDES

A. Description of materials, installation, and testing of electric induction motors; and applies to motors that are provided as part of vertical turbine pumps, as specified in other sections of these specifications.

1.02 RELATED SECTIONS

A. Section 09900 - Paints.

B. Section 11200 - Pumps.

1.03 SUBMITTALS

A. **PUMP A** (TWO PUMPS)

1.	Total Pump Head excluding pump and column losses	150 feet
2.	Nominal Pump Capacity:	20 gpm (16 TO 60).
3.	Motor Size:	5 HP (minimum)
4.	Pump Efficiency:	78 % (minimum)

B. **PUMP B** (ONE PUMP-UL LISTED FIRE PUMP REQ'D)

1.	Total Pump Head excluding pump and column losses	120 feet
2.	Nominal Pump Capacity:	1500 gpm
3.	Motor Size:	75 HP (minimum)
4.	Pump Efficiency:	78 % (minimum)

C. See Section 01300 - Administrative Requirements, for submittal procedures.

D. Show complete nameplate data, ratings, characteristics, mounting arrangements, size and location of conduit entry, location and size of grounding lug, and coating.

E. For high efficiency motors (Suffix E), provide percent efficiency data at full, 75%, and 50% load.

F. Submit factory test results for each motor.

G. Manufacturer's Installation Instructions: Indicate special installation procedures.

H. Operation Data: Provide complete operating manuals.

I. Maintenance Data: Provide maintenance instructions, maintenance schedules, and related items.

1.04 QUALITY ASSURANCE

A. Manufacturer Qualifications: Company specializing in manufacturing the products specified in this Section with minimum five years documented experience.

B. Installer Qualifications: Company specializing in performing the work of this section with minimum five years of experience.

C. NEMA Compliance: Unless otherwise indicated, comply with NEMA MG-1.

D. Factory Tests:

1. For each integral horsepower motor provide routine (short commercial) test data. Tests shall comply with NEMA MG 1-12.51 and MG 1-23.46.

2. For other tests, see “Motor Types” Suffix D in Part 2 of this section.

1.05 REGULATORY REQUIREMENTS

A. Conform to applicable codes for motors and associated equipment.

1.08 WARRANTY

A. See Section 01780 - Closeout Submittals, for additional warranty requirements.

1.09 WARRANTY REPAIRS

A. After the pump and motor has been in operation for at least ten months and less than one year, and at other times during the guarantee (warranty) period when the Engineer determines that the pump or motor is not operating properly, the service technicians shall again inspect and test the equipment.

B. If any defects are found in the pump, motor or related equipment, resulting from faulty materials or installation, and not due to normal wear and tear, the Contractor shall make all repairs and adjustments required; and shall replace defective materials and equipment with new materials and equipment as required.

PART 2 PRODUCTS

2.01 ELECTRIC PUMP MOTOR DESIGN REQUIREMENTS

A. The electric motor shall be drip-proof, vertical hollow shaft type; premium efficiency, three phase, 60 Hertz, 480 volts AC power, P base, squirrel cage, shaft-grounded, induction design. Motor shall be designed to operate at 1760 rpm.

1. Motors 500 horsepower, 1800 rpm and smaller, and motors 350 horsepower, 1200 rpm and smaller, shall be NEMA Design B.

B. Stator windings shall be copper.

C. The connected load (maximum horsepower required) of each motor shall not exceed its nameplate horsepower rating (exclusive of service power) under any operating condition.

D. Motors shall be sized to start and accelerate the design load of the pump without exceeding any of the specified design requirements.

1. Replace or repair any motor failing these requirements with a motor that will meet the specifications and requirements at no additional cost to the Owner.

E. Connection box shall be cast metal with gaskets between the box and housing and between the box and cover.

1. Provide a grounding terminal in the connection box.

2. Provide connection box on either the left side or the right side of the motor, as indicated and as directed.

3. Oversize connection box for all motors per IEEE-841 Standard.

F. Motors shall be totally enclosed fan-cooled motors; enclosures shall meet NEMA weather protected type 1 design, with stainless steel screens to prevent entrance of rodents.

1. Motors shall have a service factor of 1.15.

G. Unless otherwise noted, motors shall be rated for continuous duty at an ambient temperature of 40 ◦ C; and the nameplate adjusted for the elevation of the project site.

H. The nominal efficiency shall meet NEMA PREMIUM standards as outlined by NEMA, and meet the following:

1. Efficiency:
   a. Tested in accordance with NEMA MG 1, paragraph 12.54.1.
   b. Guaranteed minimum at full load in accordance with Table 1.

2. Power Factor: Guaranteed minimum at full nameplate load in accordance with Table 1.

2.03 MOTOR BEARINGS

A. Thrust bearings shall have ample capacity to handle the weight of all rotating parts and the continuous down thrust as specified by the pump manufacturer with an AFBMA B-10, one-year minimum or five-year average life under design conditions. Provisions shall be made for momentary up-thrust equal to 30% of rated down thrust.

2.04 INSULATION AND TEMPERATURE RISE

A. Unless otherwise noted, provide Class H insulation, with Class B rise at unity service factor, as specified by NEMA standards.

2.05 COATING

A. Coat cast-iron frame motors at the factory with a prime coat which shall be compatible with field-applied finish coats.

B. Field-apply finish coats as specified in Section 09900.

2.06 NOISE LEVELS

A. Motors shall have no-load sound power levels not to exceed the values specified in NEMA MG 1-12.53.3.

2.07 MOTOR TYPES

A. Motor designations consist of type number and suffix letter. The number and letter are intended to be compatible, and the motor shall meet the requirements of both.

1. Type 4: Totally enclosed, fan cooled.

2. Suffix E: Unless otherwise noted, motors shall be classified as “Energy Efficient” and shall have minimum guaranteed full load efficiencies in accordance with NEMA MG 1, paragraphs 12.54 and 12.57. The efficiency shall be determined by IEEE 112, Method B, using sine wave power for motors up to 300 horsepower and Method F for motors above 300 horsepower. Efficiency shall be listed on the nameplate in accordance with NEMA MG 1-12.58.2.

3. Suffix H: Motor shall have 120-volt heating elements.

4. Suffix N: Provide motor with a guaranteed maximum sound power level of 72 dBa, measured per IEEE 85, when running at no-load connected to sine wave power.

5. Suffix P: In addition to nameplate information required by NEMA MG 1-10.37 through 39, show on the nameplate the bearing numbers, efficiency, power factor at full load, and the maximum recommended kVAR of power capacitors to result in a 90% power factor.

6. Suffix T: Provide 100-ohm platinum precision resistance-temperature detectors (RTD), with two RTDs in each winding and one RTD in each bearing, for a total of eight. The RTDs shall be designed to function in two temperature steps: the first to indicate an alarm and the second to stop the motor.

2.08 MANUFACTURERS

I. Manufacturers shall be U.S. Electric Motors, General Electric Motors, Toshiba, or acceptable equals.

PART 3 EXECUTION

3.01 EXAMINATION

A. Verify that the pump has been installed according to project drawings.

B. Verify that the new pump station electrical system has been installed according to project drawings.

3.02 STORAGE

A. Protect motors from exposure of elements for which they are not designed. Install and energize temporary electrical service to motors with electrical heaters.

B. Store motors in a ventilated and protected environment similar to or better than the environment in their final location.

3.03 INSTALLATION - ELECTRIC PUMP MOTOR

A. The pump motor and accessories, shall be installed where and as indicated on the drawings, in accordance with manufacturer's shop drawings, written instructions and recommendations; and as specified herein.

B. Shop and field painting shall be done in accordance with Section 09900.

3.04 CONNECTION TO EXISTING MOTOR CONTROLLER

A. The new motor shall be connected to the existing wiring from the existing controller.

1. New wiring shall be installed in flexible conduit, from the existing junction box located at the old pump motor to a new junction box at the new pump discharge head, as required and as directed.

2. New wiring shall be installed in flexible conduit from the new junction box at the pump discharge head to the connection with the new motor, as required.

B. Install equipment required for District’s SCADA system; and connect equipment to the SCADA system, as required.

3.05 SUPERVISION OF INSTALLATION.

A. Contractor shall provide a factory-trained service technician to completely check the installation of the pump motor; and to assist during the operating tests described herein.

3.06 OPERATING TESTS

A. After installation of the pump motor is completed and at such time as the Engineer may direct, the Contractor shall conduct operating tests of the pump motor for acceptance of the work. The test shall be performed in the presence of the Engineer or his authorized representative.

1. Perform insulation resistance tests in accordance with ANSI/IEEE 43.

2. Verify that motor space heaters, where provided, are functional.

3. Run each motor with its control as nearly as possible under operating conditions to demonstrate correct rotation direction, alignment, wiring size, proper overload relay sizing, speed, and satisfactory operation. Test interlocks and control features to verify correct wiring and operation.

4. Record current in each phase of each motor, and include in the maintenance manual. Repair or replace motor or driven equipment if current exceeds motor nameplate value.

5. Defects. Any defects in equipment or materials furnished by the Contractor which become evident during testing, shall be corrected by the Contractor at his expense; with no additional cost to the Owner. If corrections are required during the testing, the Engineer may require that the testing be repeated for the specified period.

Table 1 --- Motor Performance Requirement

HP	Nominal Speed (rpm)	100% of Load Nominal Minimum Full Load Efficiency	% Guaranteed Minimum Full Load Power Factor
75	1800	94.3	81.5
150	1800	95.7	85.0
200	1800	96.1	86.5
300	1800	96.5	80.0
350	1800	96.3	85.9

END OF SECTION

GRUNDFOS

SUBMITTAL

Hydro MPC E with CRE pumps

QUOTE NUMBER / ID Q15026 - Nickerson - Dean	**UNIT TAG 001**	**QUANTITY 1**
	SERVICE	
REPRESENTATIVE	**SUBMITTED BY**	**DATE**
ENGINEER	**APPROVED BY**	**DATE**
CONTRACTOR	**ORDER #**	**DATE**

Hydro MPC-E 2CRE 10-5 3x460V 60Hz 3599 rpm

Part Number N/A

Conditions of Service		Pump Data		Motor Data	
Flow Per Pump	60.00 USgpm	Material	Standard - Cast Iron / 304 Stainless Steel	Nameplate HP	5 HP
Head	150.2 ft			Rated Power	3.41 HP
Liquid	Cold Water			Enclosure	TEFC
Temperature	68.00 deg F	Pump shut off pressure	98.48 psi.g	Voltage	460-480 V
NPSHr	12.55 ft	Max Allowable Suction Pressure	116.0 psi.g	Phase	3 Phase
Viscosity	1.00 cP				
Specific Gravity	1.000 SG	Pump Efficiency	66.76 %		
		PEI (VL)	0.4		
		ER (VL)	60		

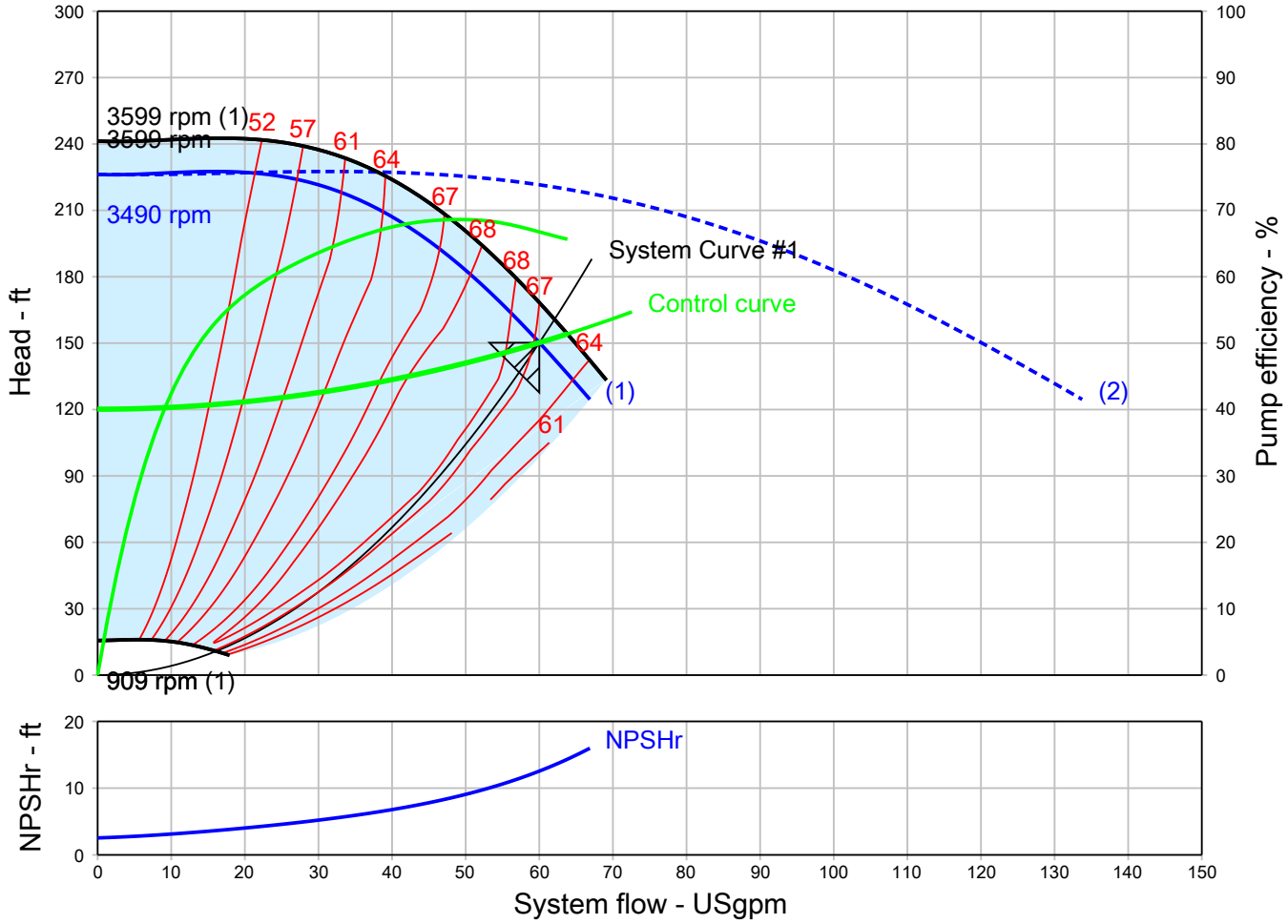

1. Manifolds 2.5" NPT Class 150 AISI 316SS Schedule 10s ASTM A312 or ∅76.1mm x2mm
2. Base/Frame AISI 304SS
3. Standard system layout : panel right facing suction
4. Full port ball valve ASTM
5. UL Type 3R/12 rated electrical panel

Note: panel size will vary with options

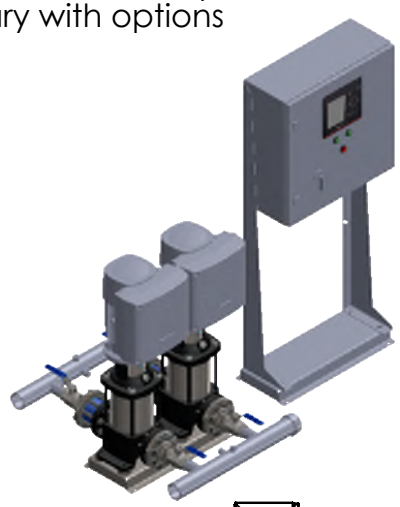

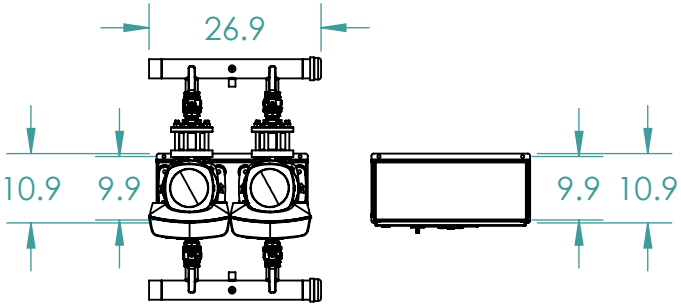

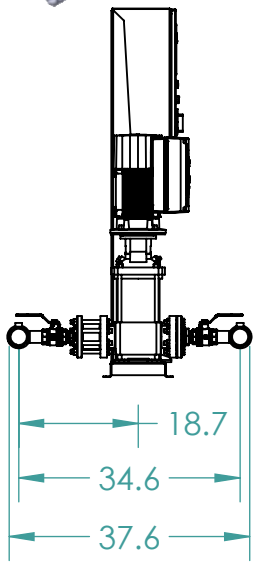

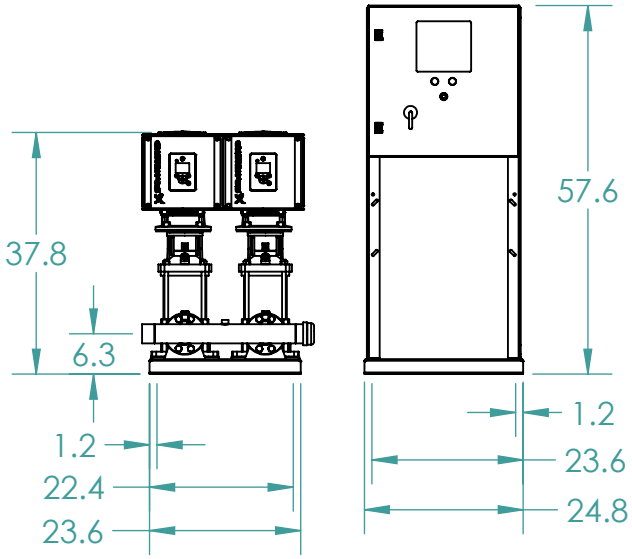

GRUNDFOS

FRESNO, CALIFORNIA 93727 USA

Note:
All dimensions are ±0.5"
Not for Construction
All dimensions subject to changewithout notice.

BoosterpaQ Model:	HYDRO MPC E 2CRE10-5			
Power:	3x460 60HZ 2x5HP			
Job:				Scale: 1:30
Dwg No:	Rev: 0	Date: 5/24/2018	Drawer 71999	Page: 1 of 1

GRUNDFOS

Panel Part Number:
99554618

Description

Control MPC E

2 X 5HP

3 X 480V

Selected Options: System Fault Light, Audible Alarm, Surge Protection, Pump Run Light, Normal/Emergency Switch, Service Disconnect Switch

ECM/Rev	Date
0	4/12/2019
1	9/9/2019

Control MPC E
2 X 5HP
3 X 480V

This drawing and its content is the property of GRUNDFOS. It may not be copied for third third parties or competitors. Changes are only to be made by GRUNDFOS.

PROJECT: 99554618

EDW-WD-GPC-1000

GRUNDFOS

Panel Part Number: 99554618

Feeder Circuit Protection:

Feeder circuit protection to be provided by others. Type and size to be based on local, state and national electrical codes

SCCR Rating: 100 kA RMS Symmetric, 480V

UL Type Rating: 3R

Largest Motor FLA and Panel Maximum FLA:

Motor Horsepower	5HP
Motor FLA	6.2FLA
Panel Max. FLA	13.4FLA

Wire Type	Color	Abbr.
+12/24VDC Power/PLC Input(s)	Blue	BU
-12/24VDC Power/PLC Input(s)	Blue w/White Stripe	BUWH
115VAC Primary Line Power	Black	BK
115VAC Neutral	White	WH
Ground/PE	Green/Yellow Stripe	GNYE
Analog Inputs	Orange	OG
Analog Outputs	Orange	OG
Digital Inputs (CU Components)	Violet	VT
Ground for Digital Inputs (CU Components)	Violet w/White Stripe	VTWH
Digital Outputs	Yellow	YE
Power L1	Black	BK
Power L2	Orange	OG
Power L3	Red	RD
Power Neutral	White	WH
All Other Wiring	Brown	BN

Cross Reference Definition

(##-##)
Sheet-Row

Wire Types

Internal Panel Wire
External Wire

Safety / Application Notes:

** Please Reference the "BOOSTERPAQ - HYDRO MPC" Installation and Operation Instructions "BEFORE" Applying power to Panel.

** Power supply wires in front of main disconnect switch have dangerous voltage even though the main disconnect switch is off.

** Control panel must be connected professionally to the earth / ground.

** GRUNDFOS MLE motors have an integrated variable frequency drive (VFD) which provides motor overload protection. If a system utilizes MLE motors, the motor overload protection is provided by the VFD and does not require any additional motor overload protection.

ECM/Rev	Date
0	4/12/2019
1	9/9/2019

Control MPC E
2 X 5HP
3 X 480V

This drawing and its content is the property of GRUNDFOS. It may not be copied for third third parties or competitors. Changes are only to be made by GRUNDFOS.

PROJECT: 99554618

EDW-WD-GPC-1000

GRUNDFOS

Panel Part Number: 99554618

1-Table of Contents

Drawing	Revision	Date	Created by	Description
01	0	4/12/2019	jharvey	Cover Page 01
02	0	4/12/2019	jharvey	Cover Page 02
03	0	4/12/2019	jharvey	Drawings list
04	0	4/12/2019	jharvey	Power 01
05	0	4/12/2019	jharvey	Control 01
06	0	4/12/2019	jharvey	Control 02
07	0	4/12/2019	jharvey	Panel Layout
08	0	4/12/2019	jharvey	Panel Views
09	0	5/16/2019	msaulls	Bill Of Materials grouped by manufacturer Rev1.0 (Components)
10	0	5/16/2019	msaulls	Bill Of Materials grouped by manufacturer Rev1.0 (Components)
11	0	4/12/2019	jharvey	Main electrical closet

This drawing and its content is the property of GRUNDFOS. It may not be copied for third third parties or competitors. Changes are only to be made by GRUNDFOS.

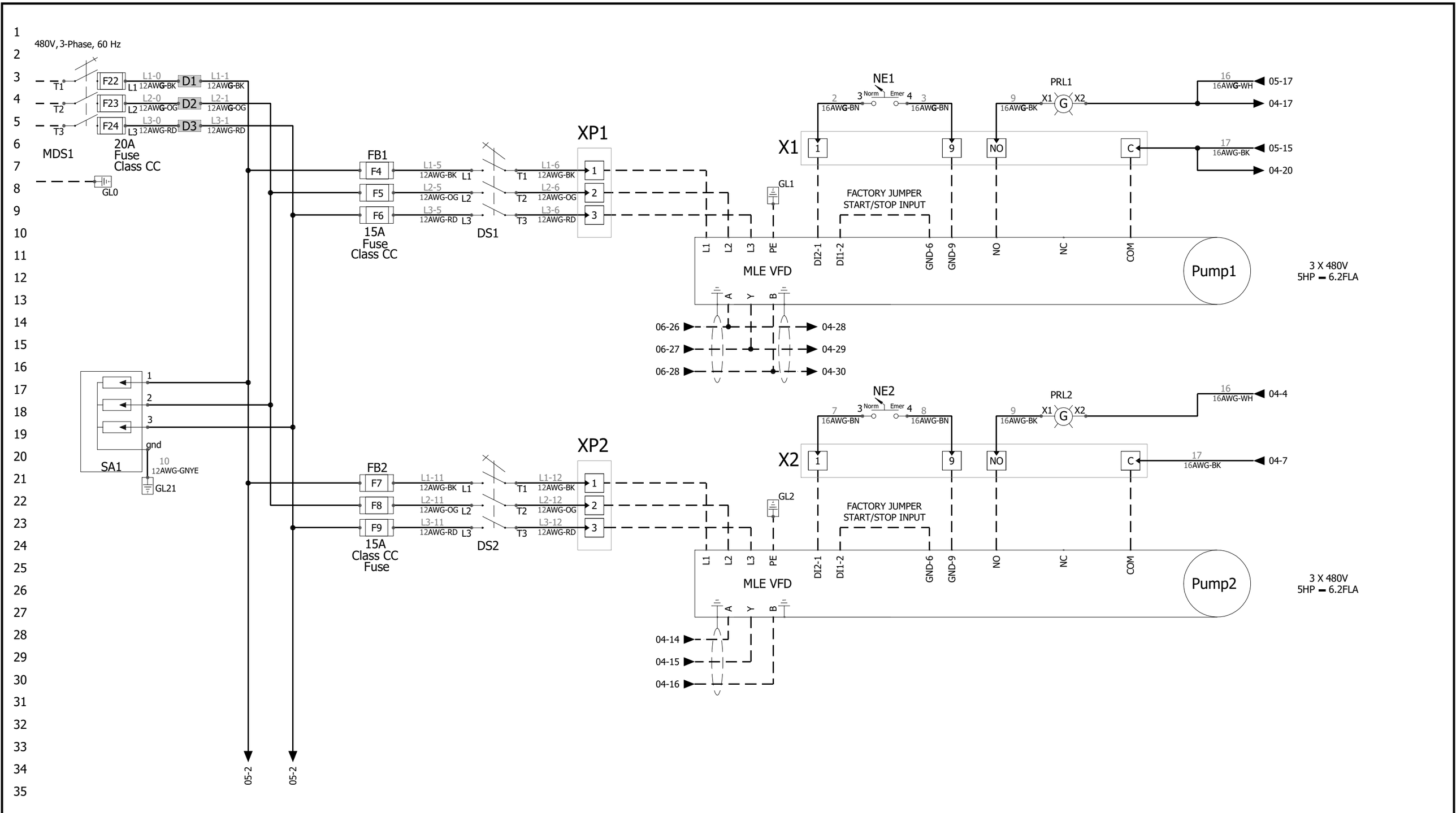

ECM/Rev	Date
0	4/12/2019
1	9/9/2019

Control MPC E
2 X 5HP
3 X 480V

This drawing and its content is the property of GRUNDFOS. It may not be copied for third third parties or competitors. Changes are only to be made by GRUNDFOS.

PROJECT: 99554618

EDW-WD-GPC-1000

GRUNDFOS

Panel Part Number: 99554618

SHEET: 4/10

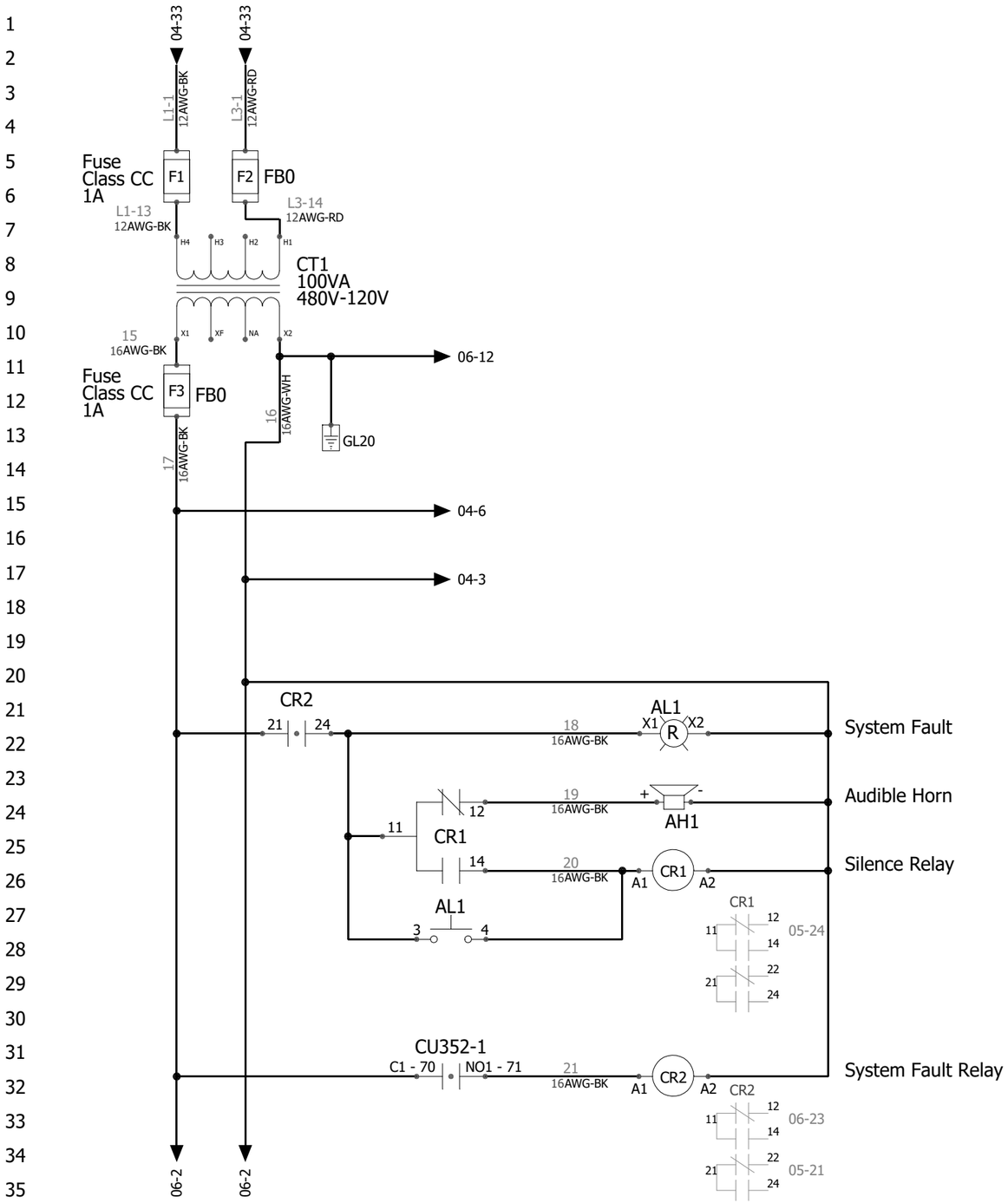

0	4/12/2019	Control MPC E 2 X 5HP 3 X 480V	This drawing and its content is the property of GRUNDFOS. It may not be copied for third third parties or competitors. Changes are only to be made by GRUNDFOS.	PROJECT: 99554618	GRUNDFOS
1	9/9/2019				
				EDW-WD-GPC-1000	Panel Part Number: 99554618
					SHEET: 5/10
ECM/Rev	Date				

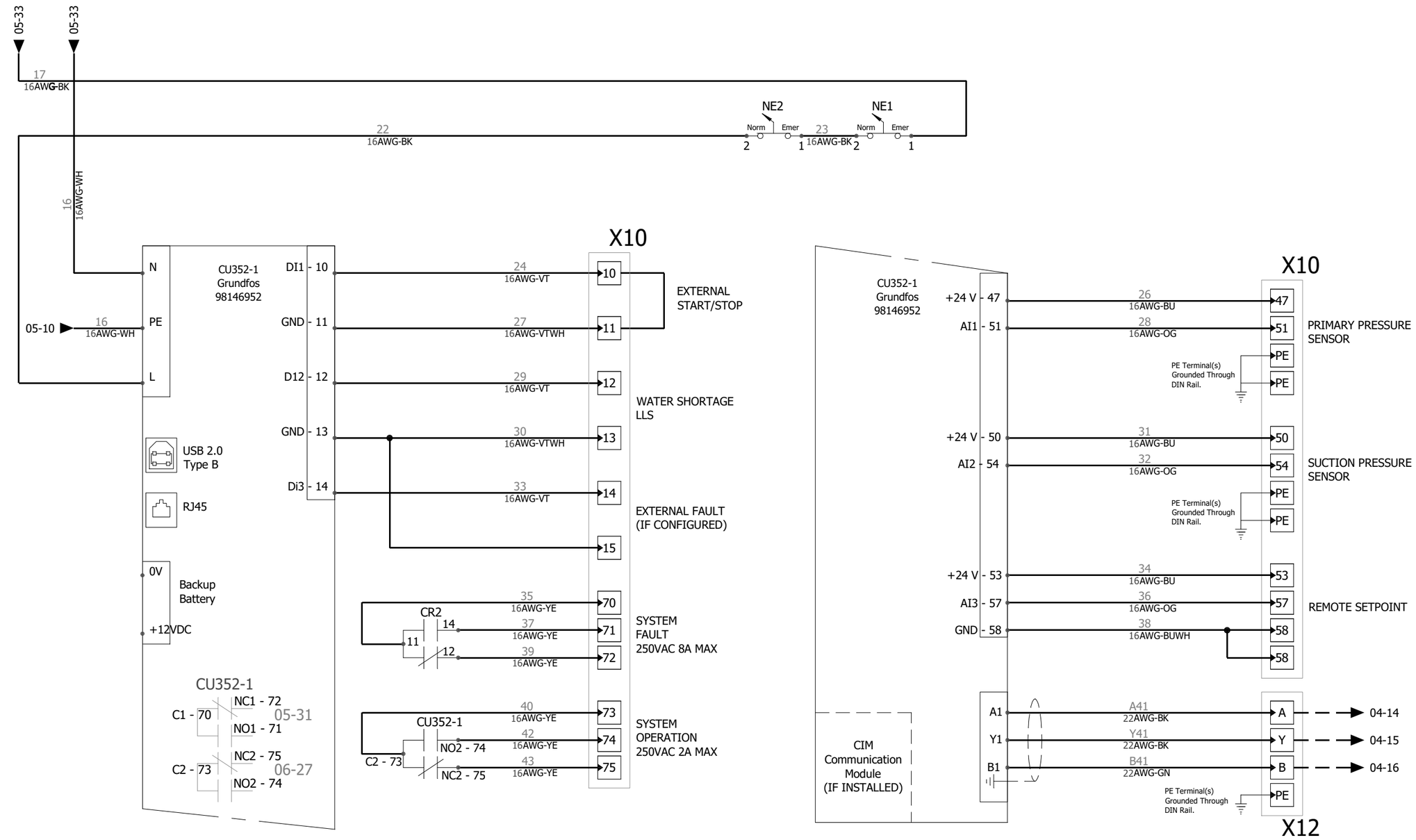

CIM COMMUNICATION MODULE TERMINATIONS

CIM		Terminal 1	Terminal 2	Terminal 3	Terminal 4
CIM 110	LON	LON terminal A	LON terminal B	LON terminal for cable screen	N/A
CIM 150	PROFIBUS DP	PROFIBUS terminal B	PROFIBUS terminal A	PROFIBUS terminal DGND	+5VDC
CIM 200	Modbus RTU	Modbus terminal D1	Modbus terminal D0	Modbus terminal common/GND	N/A
CIM 300	BACnet MS/TP	BACnet Plus terminal	BACnet Minus terminal	BACnet Ground terminal	N/A
CIM 500	BACnet IP, Modbus TCP, PROFINET IO	RJ45	RJ45		

ECM/Rev	Date
0	4/12/2019
1	9/9/2019

Control MPC E
2 X 5HP
3 X 480V

This drawing and its content is the property of GRUNDFOS. It may not be copied for third third parties or competitors. Changes are only to be made by GRUNDFOS.

PROJECT: 99554618

EDW-WD-GPC-1000

GRUNDFOS

Panel Part Number: 99554618

SHEET: 6/10

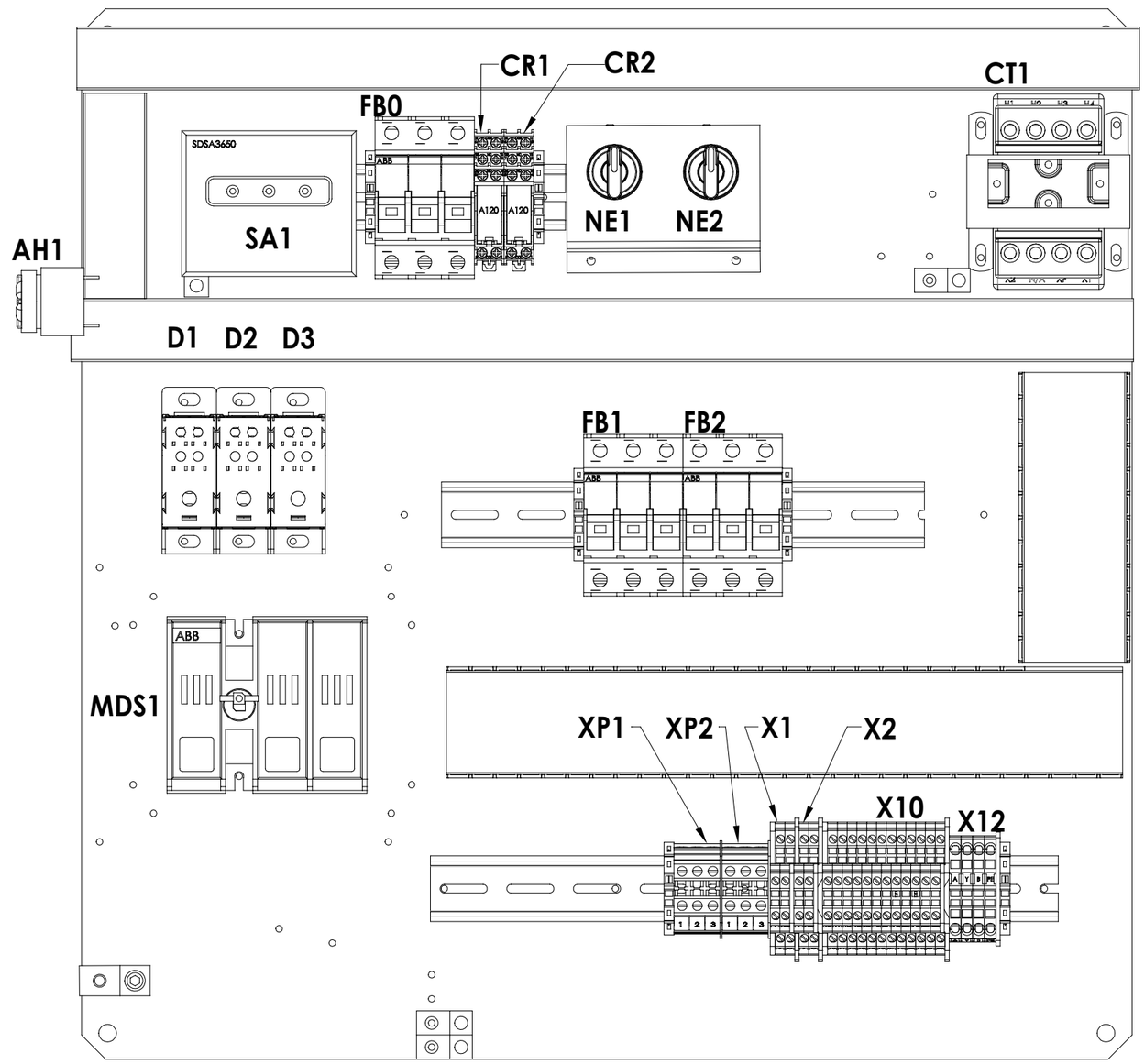

ECM/Rev	Date
0	4/12/2019
1	9/9/2019

Control MPC E
2 X 5HP
3 X 480V

This drawing and its content is the property of GRUNDFOS. It may not be copied for third third parties or competitors. Changes are only to be made by GRUNDFOS.

PROJECT: 99554618

EDW-WD-GPC-1000

GRUNDFOS

Panel Part Number: 99554618

SHEET: 7/10

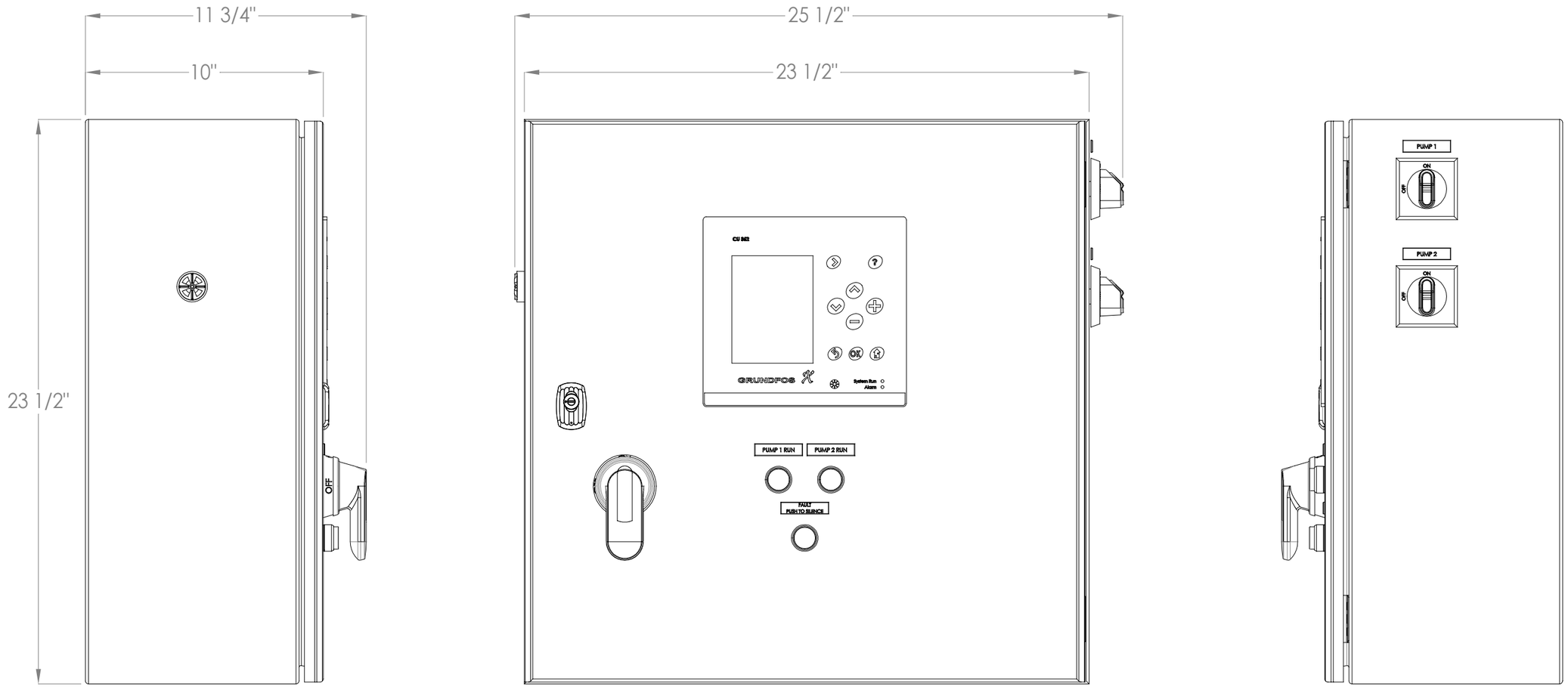

CLEARANCE FROM FRONT OF ENCLOSURE MUST BE 36".
CLEARANCE FROM DISCONNECT HANDLES MUST BE 6"

ECM/Rev	Date
0	4/12/2019
1	9/9/2019

Control MPC E
2 X 5HP
3 X 480V

This drawing and its content is the property of GRUNDFOS. It may not be copied for third third parties or competitors. Changes are only to be made by GRUNDFOS.

PROJECT: 99554618

EDW-WD-GPC-1000

GRUNDFOS

Panel Part Number: 99554618

SHEET: 8/10

Article Number	Mark	Manufacturer	Reference	Description	Quantity	Component Type
13-16-26-1241	FB0 , FB1 , FB2	ABB	E9330CCS	Fuse Block; 3P, 30 A, Class CC, Indicator, Padlockable	3	Fuse Block 3-pole
13-16-66-1615	MDS1	ABB	OHY80L6	Disconnect Handle; Red/Yellow, 30/60/100/250A, Type 4, 4X, 3R, 12	1	Main Disconnect
13-16-66-1348	DS1 , DS2	ABB	OHYS2RJ	Disconnect Handle; Red/Yellow, for Side Mount, Type 3R, 12	2	Service Disconnect
13-16-66-1506	MDS1	ABB	OHZX10	Alignment Ring; Use on all Pistol Grip Handles	1	Main Disconnect
13-16-66-1431	MDS1	ABB	OS30FACC12	Disconnect Switch; 30A, Fuseable, 600V, 3-Pole, UL98, Class CC, Center Shaft	1	Main Disconnect
13-16-66-1383	DS1 , DS2	ABB	OT63FT3	Disconnect Switch; 60A, 600V, 3-Pole, Front Mount	2	Service Disconnect
13-16-66-1610	MDS1	ABB	OXP6X500	Disconnect Shaft; 19.7", 6x500	1	Main Disconnect
13-16-81-1463	CT1	Acme	TB100A005C	Transformer; 100VA, P/208/230/460V, S/115V	1	Controls Transformer
13-16-26-1060	F1 , F2 , F3	F.Shaw	ATQR1	Fuse; 1A, 600V, 13/32" x 1 1/2", Class CC	3	Fuse
13-16-26-1068	F4 , F5 , F6 , F7 , F8 , F9	F.Shaw	ATQR15	Fuse; 15A, 600V, 13/32" x 1 1/2", Class CC	6	Fuse
13-16-26-1078	F22 , F23 , F24	F.Shaw	ATQR20	Fuse; 20A, 600V, 13/32" x 1 1/2", Class CC	3	Fuse
13-16-71-1530	D1 , D2 , D3	F.Shaw	FSPDB3A	Distribution block; 310A, 600V, 2in/8out	3	Distribution Block
13-16-56-1029	AH1	Floyd Bell	SP-1081	Alarm; 120V, 95db, Reduced Sensitivity, Extra Fast Warble, Panel Mount	1	Audible Horn
13-16-39-1093	CU352-1	Grundfos	98146952	(CM) Logic Module; Grundfos MPC Controller (CU352)	1	CU352
13-16-46-1073	CR1 , CR2	Idec	RJ2S-CL-A120	Relay; 120V, DPDT, 8A, Indicator	2	Silence Relay , System Fault Relay
13-16-46-1283	CR1 , CR2	Idec	SJ2S-07LW	Socket; 8 Pin, DIN/Pnl Mt, for RJ Relays	2	Silence Relay , System Fault Relay
13-66-11-1130	SAB1	OSI	13-66-11-1130	Bracket; Surge Arrestor	1	SA Bracket
	L1	OSI	65-BP-2424-A01	Backplate; 24x24, Aluminum, Pre-Drilled, Layout 01	1	Main electrical closet
65-ELEC-BRKT-2HOA	SWB1	OSI	65-ELEC-BRKT-2HOA	Bracket; HOA or N/E Switch, x2	1	NE Bracket
65-LIGHT-1R-032	AL1	OSI	65-light-1R-032	Push Button Light; Fault, Push to Silence	1	System Fault
65-SWITCH-2-12	NE1 , NE2	OSI	65-SWITCH-2-12	Switch; Two Position, 1-NO, 1-NC	2	Normal/Emergency Switch
65-TB-CU352-DB	X10 1	OSI	65-TB-CU352-DB	Terminal Blocks; Double Stack, X10 CU352 Terminals	1	CU352 Terminal Blocks
65-TB-GENI	X12 1	OSI	65-TB-GENI	Terminal Blocks; X12 Geni Bus Terminals	1	Geni Bus Terminal Blocks

This drawing and its content is the property of GRUNDFOS. It may not be copied for third third parties or competitors. Changes are only to be made by GRUNDFOS.

Article Number	Mark	Manufacturer	Reference	Description	Quantity	Component Type
65-TB-PT-50A	XP1 1 , XP2 1	OSI	65-TB-PT-50A	Terminal Blocks; Single Pump Pass Through, 50A	2	Pump Power Terminal Blocks
65-TB-SINGLE-PUMP-DB	X1 1 , X2 1	OSI	65-TB-SINGLE-PUMP-DB	Terminal Blocks; MLE Pump Control	2	Pump Control Terminal Blocks
13-16-86-1680	GL0 , GL1 , GL2 , GL20 , GL21	Raco	TA2-Bulk	Ground Lug; 2AWG, Burndy	5	Ground Lug
13-16-61-1010	SA1	Schneider	SDSA 3650	Surge Arrestor; 3 Phase, 600V, WYE	1	Surge Arrestor
65-ENCL-2424-RSH	L1	Schneider Electric	65-ENCL-2424-RSH	Enclosure; 24X24 Right Side Hinge	1	Main electrical closet
13-16-36-1421	PRL1 , PRL2	Siemens	3SU11036AA401AA0	Pilot Light; Green, 110 VAC Complete	2	Pump 1 Run Light , Pump 2 Run Light

ECM/Rev	Date
0	4/12/2019
1	9/9/2019

Control MPC E
2 X 5HP
3 X 480V

This drawing and its content is the property of GRUNDFOS. It may not be copied for third third parties or competitors. Changes are only to be made by GRUNDFOS.

PROJECT: 99554618

EDW-WD-GPC-1000

GRUNDFOS

Panel Part Number: 99554618

SHEET: 10/10

Ball Valves

General

- Threaded Ends
- Blow Out Proof Stem
- 600 WOG
- 2-Piece Body
- Teflon Seats
- Teflon Packing

Dimensions & Weights

Size	DN (in)	S (in)	H (in)	L (in)	WT. (lb)
1/4"	0.39	1.76	1.75	3.54	0.35
3/4"	0.75	2.50	2.18	3.94	0.79
1-1/4"	1.26	3.42	2.87	4.80	1.75
1-1/2"	1.57	3.76	3.48	5.91	2.47
2"	1.97	4.25	3.82	5.91	3.46

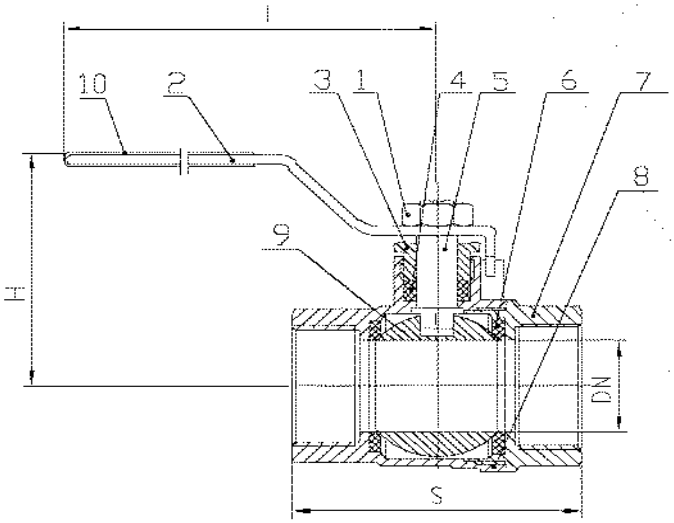

MATERIAL SPECIFICATIONS

NO.	PART	MATERIAL (ASTM)
1	NUT	ZINC PLATED STEEL
2	HANDLE	ZINC PLATED STEEL
3	BONNET	BRASS (C37000)
4	PACKING	TEFLON
5	STEM	BRASS (C37000)
6	BALL SEAT	TEFLON
7	END PIECE	LOW LEAD BRASS (LTN60-6)
8	BODY	LOW LEAD BRASS (LTN60-6)
9	BALL	LOW LEAD BRASS (LTN60-6)
10	SLEEVE	PVC

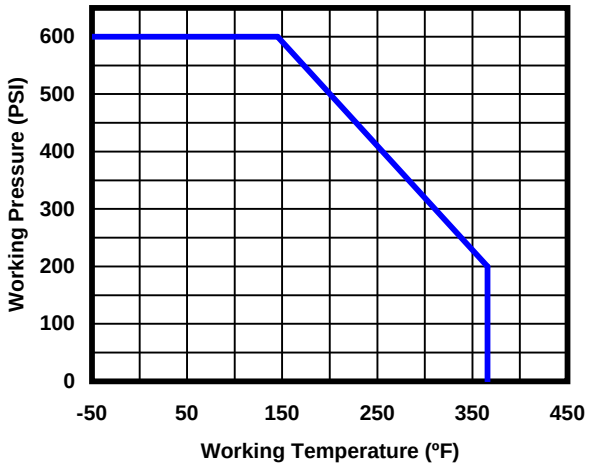

APPROVALS

- NSF 61, IAPMO - N4359
- AB1953, IAPMO - 5653

Wafer Check Valve Silent Check Model 888

Sizes 2", 3" , 4" & 5" / 50 mm, 80mm, 100mm & 125 mm

Flomatic Corporation

LEAD FREE
NSF/ANSI 61

Materials (Ductile Iron Body)

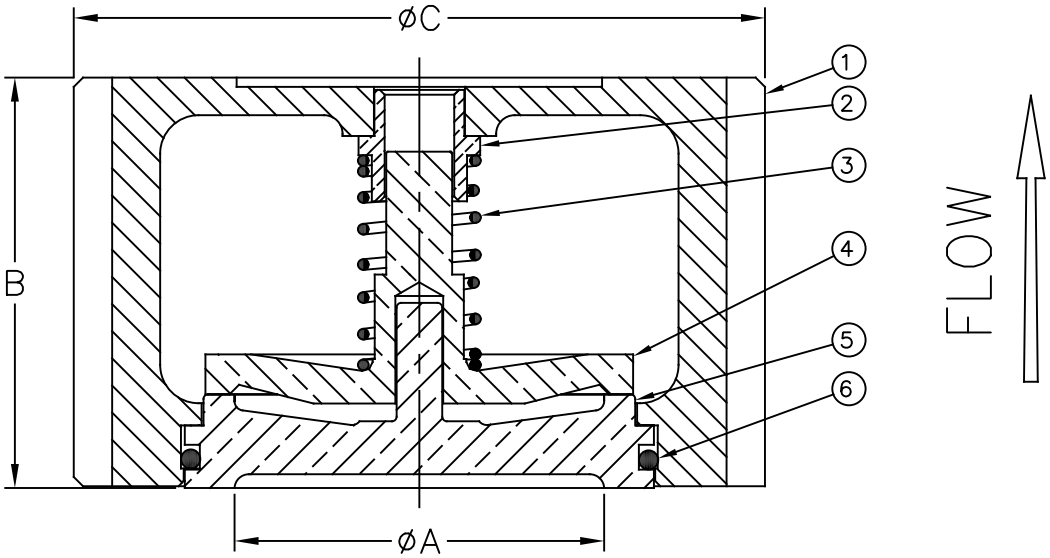

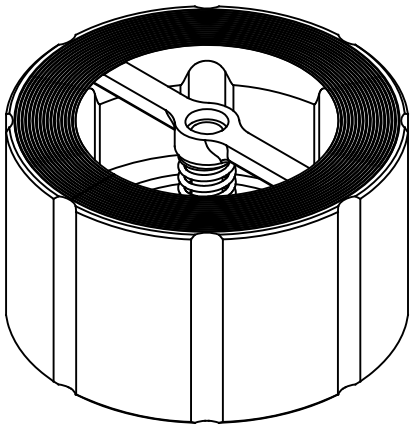

Item #	Qty	Description	Material	ASTM
1	1	Body (Epoxy Coated)	Ductile Iron	A536 65-45-12
2	1	Bushing	Bronze	C95400
3	1	Spring	Stainless Steel	302
4	1	Poppet	Silicon Brass	C87800
5	1	Seat Ring*	Silicon Brass	C87800
6	1	O'Ring	EPDM	5778-70

*OPTIONAL RESILIENT SEAT AVAILABLE, ADD "R" TO THE PART NUMBER
Max Temp 250°F (121°C)
Max Inlet Pressure @ 150º F (65ºC) 150# 300 psi (21bar)
Max Inlet Pressure @ 150º F (65ºC) 300# 500 psi (34bar)
5" VALVE IS NOT NSF APPROVED
PATENT # 6,024,121

Dimensions

Size		Part #	A		B		C		Weight		# of Bolts		Bolt Size by Flange	
inch	mm		inch	mm	inch	mm	inch	mm	lbs	kg	150#	300#	150#	300#
2	50	2434	2-13/32	61	2-5/8	67	4-1/4	108	5	2.5	4	8	5/8 x 5-1/4	5/8 x 5-1/2
3	80	2435	3-1/4	83	3-1/8	79	5-3/4	146	11	5	4	8	5/8 x 6-1/4	3/4 x 7
4	100	2436	4-3/8	111	4	102	7	178	18	8	8	8	5/8 x 7	3/4 x 8
5	125	2433	5-1/4	133	4-3/4	121	8-3/8	213	25	11.5	8	8	3/4 x 7-3/4	3/4 x 9

Flomatic Corporation can accept no responsibility for possible errors in catalogues, brochures and other printed material. Flomatic Corporation reserves the right to alter its products without notices. This also applies to product already agreed. All trademarks in this material are property of the respective companies. All rights reserved. ©2019 Flomatic Corporation. The drawings & information on this drawing sheet are the sole & exclusive property of Flomatic Corporation. Any reproduction, distribution, display or use of these drawings or information in whole or in part without written authorization of Flomatic Corporation is strictly prohibited. www.flomatic.com

FLOMATIC CORPORATION
GLENS FALLS, N.Y. 12801
PHONE (518) 761-9797
FAX (518) 761-9798

Silent Check Valve

Seating Detail

Models 888R,STR,S6R & 402BTR,STR, S6R

Flomatic Corporation

Materials

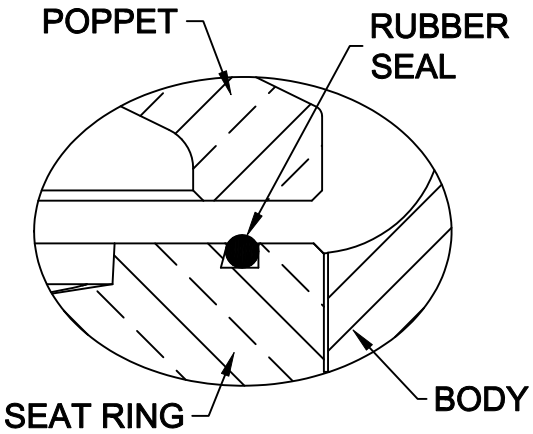

UNSEATED POSITION

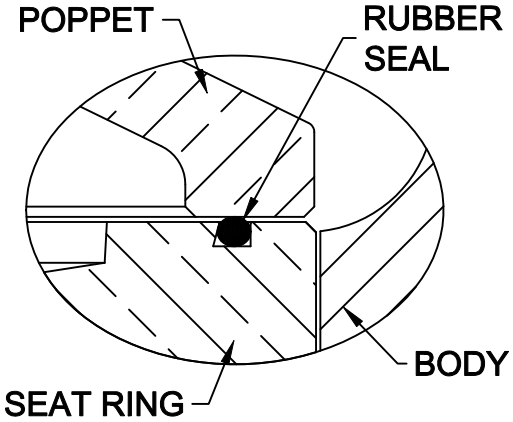

SEATED LOW PRESSURE

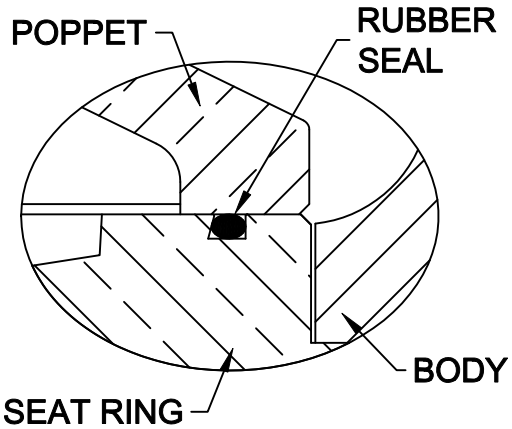

SEATED HIGH PRESSURE

PROVIDES DRIP-TIGHT SEATING AT LOW PRESSURES WITHOUT DAMAGE TO SEAL AT HIGHER PRESSURES.

THE UNIQUE SEATING ACTION STARTS WITH INITIAL CONTACT BETWEEN THE POPPET AND SEAL. AS PRESSURE INCREASES, THE SEAL IS COMPRESSED AND ALLOWS THE POPPET TO MAKE CONTACT WITH THE SEAT RING. THIS PREVENTS ANY FURTHER COMPRESSION OF THE SEAL.

THE SEATING ACTION PROVIDES BOTH, DRIP-TIGHT SEATING AT LOW PRESSURE AND METAL-TO-METAL SEATING WITH SEAL SUPPORT FOR HIGHER PRESSURES.

EPDM SEAL
Patent # 6,024,121

Flomatic Corporation can accept no responsibility for possible errors in catalogues, brochures and other printed material. Flomatic Corporation reserves the right to alter its products without notices. This also applies to product already agreed. All trademarks in this material are property of the respective companies. All right reserved. ©2011 Flomatic Corporation. The drawings & information on this drawing sheet are the sole & exclusive property of Flomatic Corporation. Any reproduction, distribution, display or use of these drawingsor information in whole or in part without written authorization of Flomatic Corporation is strictly prohibited.

FLOMATIC CORPORATION
GLENS FALLS, N.Y. 12801
PHONE (518) 761-9797
FAX (518) 761-9798

Wafer Check Valve Headloss Chart Model 888/888R

Sizes 2" thru 10"/ 50 mm thru 250 mm

FLOMATIC®
Flomatic Corporation

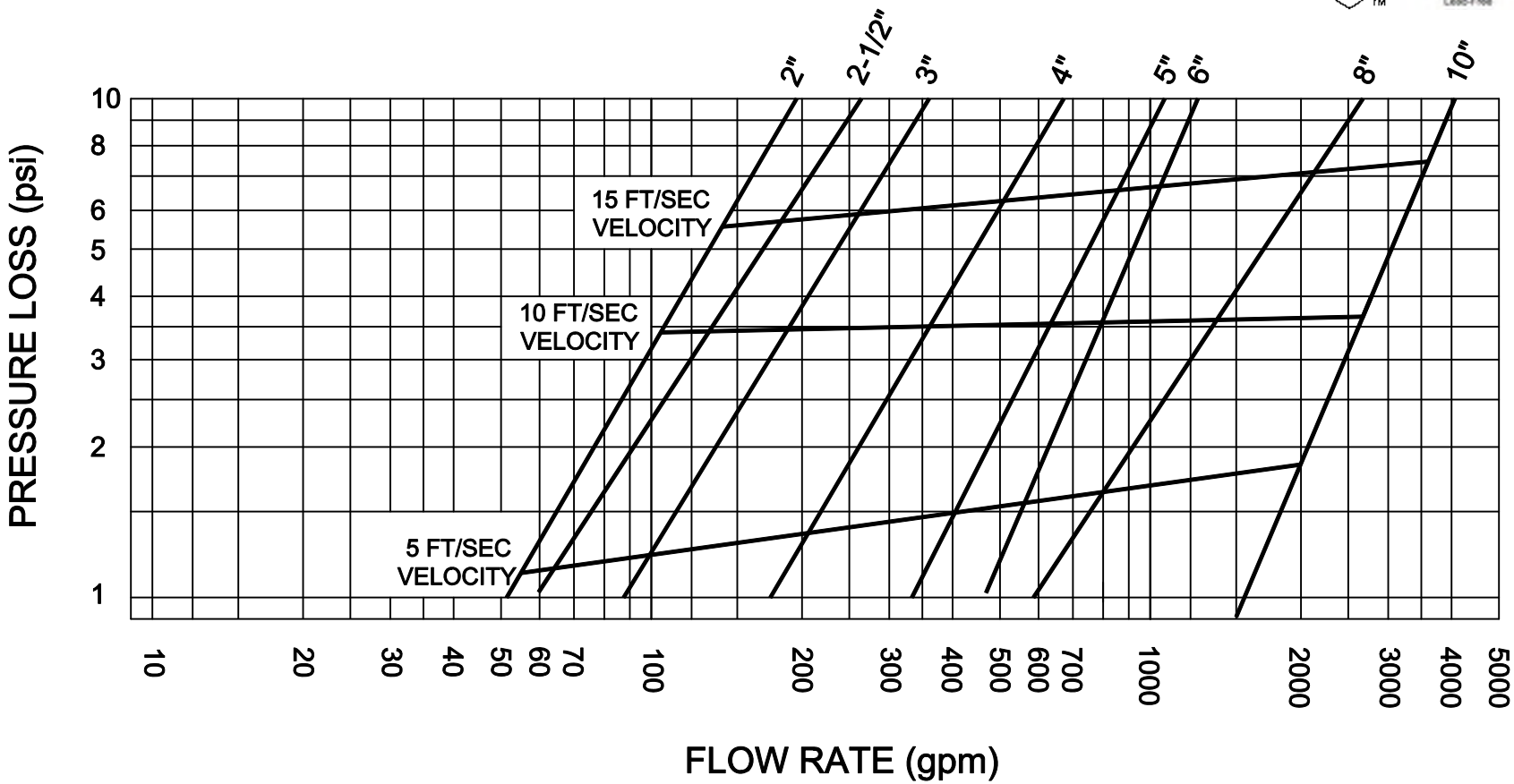

PATENT # 6,024,121

Flomatic Corporation can accept no responsibility for possible errors in catalogues, brochures and other printed material. Flomatic Corporation reserves the right to alter its products without notices. This also applies to product already agreed. All trademarks in this material are property of the respective companies. All right reserved. ©2011 Flomatic Corporation. The drawings & information on this drawing sheet are the sole & exclusive property of Flomatic Corporation. Any reproduction, distribution, display or use of these drawingsor information in whole or in part without written authorization of Flomatic Corporation is strictly prohibited.

FLOMATIC® VALVES

December 28, 1994
Dwg No: S888HL Rev: E (6/13)

FLOMATIC CORPORATION
GLENS FALLS, N.Y. 12801
PHONE (518) 761-9797
FAX (518) 761-9798

D80 Series

Dry or Liquid Filled • Stainless Steel Case

UTILITY GAUGES

D82LFB shown

Standard

Optional

- **1½", 2", 2½", 4" Dial Sizes**
- **±1.6% Accuracy (1% Optional)**
- **Stainless Steel Case**
- **Glycerine Fill Standard**

The Trerice **D80 Series** Industrial Gauge is designed for rugged performance requirements at an economical cost. This liquid filled gauge is furnished with a stainless steel case and crimped ring. Wetted parts are either bronze tube with Lead-Free (PBF) brass socket or stainless steel.

- **Optional features and case style variations available: Please consult the Options & Accessories Section for details.**
- **For correct use and application of all pressure gauges, please refer to: Pressure Gauge Standard ASME B40.100.**

Specifications

Models		Wetted Parts
D82B	(dry)	Bronze tube, brass socket
D82LFB	(liquid filled)	Lead-Free (PBF) Meets NSF/ANSI Standards 372 and 61
D83SS	(dry)	316 Stainless steel tube & socket
D83LFSS	(liquid filled)	

Dial Sizes	1½", 2", 2½", 4"
Fill	Glycerine, other fills available See Optional Features Section
Movement	**D82**: Brass **D83**: 316 Stainless steel
Connection	Lower male or center back male, (Lower back male 4" Dial only)
Case	304 stainless steel, stem-mounted flangeless
Ring	Crimped 304 stainless steel
Window	Acrylic
Pointer	Plain, black finished
Dial Face	Aluminum, white background with black graduations and markings
Accuracy	±1.6% Full Scale (1% available as an option)
Maximum Temperature	**150°F** (**65°C**)
Approximate Shipping Weight	1½" Dial Size: 0.4 lbs [0.18 kg] 2" Dial Size: 0.4 lbs [0.18 kg] 2½" Dial Size: 0.5 lbs [0.23 kg] 4" Dial Size: 1.0 lbs [0.45 kg]

HOW TO ORDER

Sample Order Number: **D82LFB 25 02 L A 110**

Model	Dial Size	Connection Size	Connection Location	Units of Measure	Range Code
D82LFB	**15** 1½	**01** ⅛ NPT*	**L** Lower	**A** psi	See Standard Ranges
D83LFSS	**20** 2"	**02** ¼ NPT**	**B** Back	**D** psi/kPa	
D82B	**25** 2½"	**04** ½ NPT***			
D83SS	**40** 4"				

* ⅛ NPT connection size not available with 4" dial size.
** ¼ NPT connection size not available with 1½" dial size.
*** ½ NPT connection size only available with 4" dial size.

12950 W. Eight Mile Road • Oak Park, MI 48237-3288 • TEL:248/399-8000 • FAX: 248/399-7246 • www.TRERICE.com

All dimensions are nominal. Dimensions in [ ] are in millimeters.

Dry or Liquid Filled • Stainless Steel Case

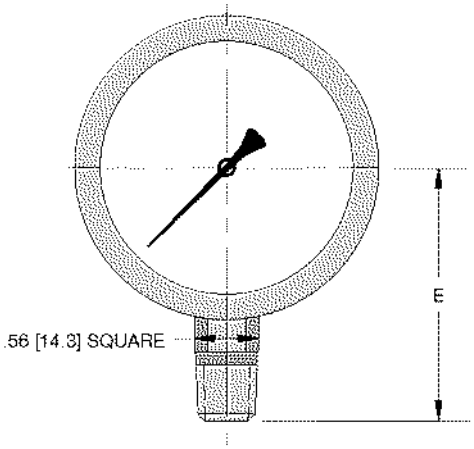

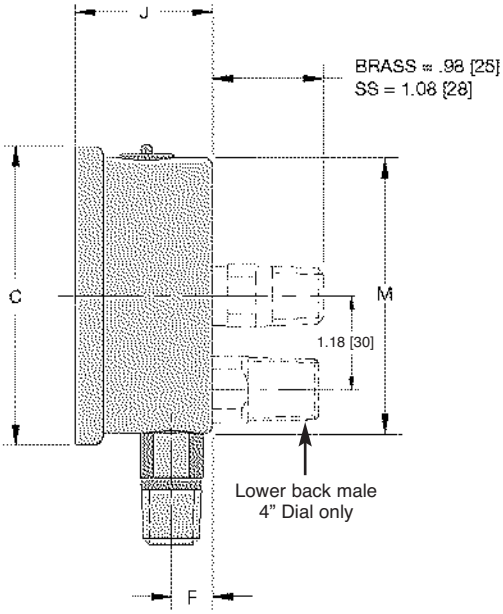

Standard Ranges

psi Ranges (A)		D82		D83	
Range Code	Specific Range (psi)	Figure Intervals	Minor Divisions	Figure Intervals	Minor Divisions
010	30" Hg to 0	5	0.5	5	0.5
020	30" Hg to 15 psi	10/5	1/0.5	10/5	1/0.5
030	30" Hg to 30 psi	10/5	1/1	10/5	1/1
040	30" Hg to 60 psi	10/10	2/1	10/10	2/1
050	30" Hg to 100 psi	30/20	2/2	30/20	2/2
060	30" Hg to 150 psi	30/30	5/2	30/30	5/2
070	30" Hg to 300 psi	30/50	5/5	30/50	5/5
080	0 to 15 psi	3	0.2	3	0.2
090	0 to 30 psi	5	0.5	5	0.5
100	0 to 60 psi	10	1	10	1
110	0 to 100 psi	10	1	10	1
120	0 to 160 psi	20	2	20	2
130	0 to 200 psi	20	2	20	2
140	0 to 300 psi	50	5	50	5
150	0 to 400 psi	50	5	50	5
160	0 to 600 psi	100	10	100	10
180	0 to 1000 psi	100	20	100	20
190	0 to 1500 psi	300	20	300	20
200	0 to 2000 psi	200	20	200	20
210	0 to 3000 psi	500	50	500	50
220	0 to 5000 psi	1000	100	1000	100

Ranges over 5000 PSI are not available on D82LFB.

230	0 to 10000 psi	N/A	N/A	2000	200
240	0 to 15000 psi	N/A	N/A	3000	200

*For dual scale ranges specify the appropriate **Units of Measure: D** (psi/kPa) followed by the corresponding **A** (psi) **Range Code***

Dial Size	C	E	F	J	M
1½" D82	1.85 [47]	1.50 [38]	0.32 [8]	1.06 [27]	1.61 [41]
1½" D83	1.85 [47]	1.50 [38]	0.32 [8]	1.06 [27]	1.61 [41]
2" D82	2.28 [58]	1.89 [48]	0.39 [10]	1.14 [29]	2.05 [52]
2" D83	2.28 [58]	2.05 [52]	0.35 [9]	1.18 [30]	2.05 [52]
2½" D82	2.68 [68]	2.24 [57]	0.39 [10]	1.18 [30]	2.44 [62]
2½" D83	2.68 [68]	2.32 [59]	0.51 [13]	1.38 [35]	2.44 [62]
4" D82	4.29 [109]	3.07 [78]	0.47 [12]	1.42 [36]	3.90 [99]
4" D83	4.29 [109]	3.94 [100]	0.75 [19]	1.93 [49]	3.94 [100]

Introduction

- Designed for use in severe industrial environments
- Enslosure and wetted parts of acid-resistant stainless steel (AISI 316L)
- All standard output signals: 4-20 mA, 0-5 V, 1-5 V, 1-6 V, 0-10 V
- A wide range of pressure and electrical connections
- Temperature compensated and laser calibrated
- Typical applications:
  - Pumps
  - Compressors
  - Pneumatics
  - Water treatment

Dimensions

Ordering

Type code Page 4	8	2	5	7	1	3
	AMP Superseal 1.5 series (male)	AMP Econoseal J series (male)	IEC 947-5-2 M12×1, 4-pin	ISO 15170-A1-3.2-Sn (Bayonet plug)	DIN 43650, Pg 9	2 m screened cable

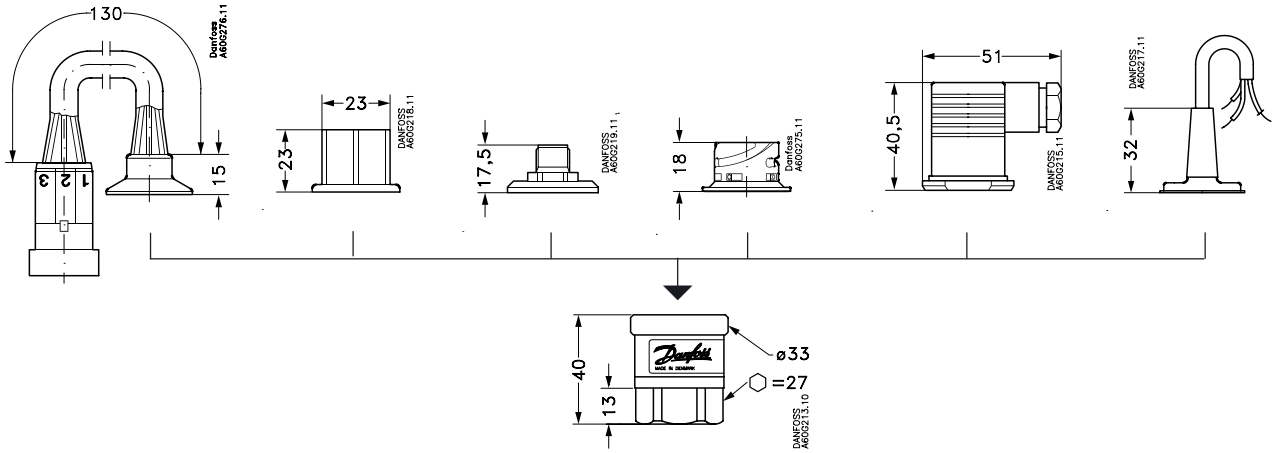

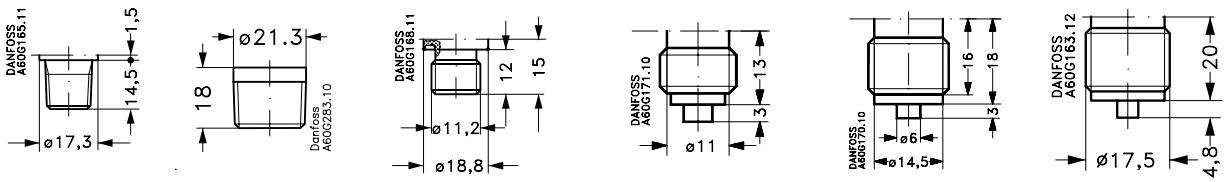

Ordering

	1/4 - 18 NPT	½ - 14 NPT	DIN 3852-E-G1/4 Gasket: DIN 3869-14	G 1/4 A (EN 837)	G 3/8A (EN 837)	G ½A (EN 837)
Type code page 4	AC04	AC08	GB04	AB04	AB06	AB08

©Danfoss A/S 11-2002

Technical data

Main specifications

Pressure connections	see page 1
Measuring ranges [bar]	0-1 0-1.6 0-2.5 0-4 0-6 0-10 0-16 0-25 0-40 0-60 0-100 0-160 0-250 0-400 0-600
Output signals	4-20 mA 0-5 V 1-5 V 1-6 V 0-10 V
Electrical connections	see page 3

Performance (IEC 770)

Accuracy	±0.5% FS (typ.) ±1% FS (max.)
Non-linearity (best fit straight line)	≤ ±0.5% FS
Hysteresis and repeatability	≤ ±0.1% FS
Thermal zero point shift	≤ ±0.1% FS/10K (typ.) ≤ ±0.2% FS/10K (max.)
Thermal sensitivity (span) shift	≤ ±0.1% FS/10K (typ.) ≤ ±0.2% FS/10K (max.)
Response time	< 4 ms
Overload pressure	6 × FS (max. 1500 bar)
Burst pressure	6 × FS (max. 2000 bar)
Durability, P: 10-90% FS	$>10\times10^6$ cycles

Electrical specifications

	Nom. output signal (short-circuit protected)		
	4 – 20 mA	0-5, 1-5, 1-6 V d.c.	0-10 V d.c.
Supply voltage [U_B], polarity protected	9 → 32 V d.c.	9 → 30 V d.c.	15 → 30 V d.c.
Supply - current consumption	-	≤ 5 mA	≤ 8 mA
Supply voltage dependency	≤ ±0.05% FS/10 V		
Current limitation (linear output up to 1.5x nom. range)	34 mA (typ.)	-	
Output impedance	-	≤ 25Ω	
Load [R_L] (load connected to 0V)	$R_L \leq (U_B\text{-}9V)/0.02$	$R_L \geq 10$ kΩ	$R_L \geq 15$ kΩ

Environmental conditions

Medium temperature range				–40 → +85°C
Ambient temperature range (depending on electrical connection)				see page 3
Compensated temperature range				0 → +80°C
Transport temperature range				–50 → +85°C
EMC - Emission				EN 61000-6-3
EMC - Immunity	Electrostatic discharge		Air mode 8 kV	EN 61000-6-2
			Contact mode 4 kV	EN 61000-6-2
	RF	field	10 V/m, 26 MHz - 1 GHz	EN 61000-6-2
		conducted	10 V_{rms}, 150 kHz - 30 MHz	EN 61000-6-2
	Transient	burst	4 kV (CM),Clamp	EN 61000-6-2
		surge	1 kV (CM,DM), Rg = 42Ω	EN 61000-6-2
Insulation resistance				> 100 MΩ at 100 V d.c.
Mains frequency test			500 V, 50 Hz	SEN 361503
Vibration stability	Sinusoidal		15.9 mm-pp, 5Hz-25Hz	IEC 60068-2-6
			20 g, 25 Hz - 2 kHz	
	Random		7.5 g_{rms}, 5 Hz - 1 kHz	IEC 60068-2-34, IEC 60068-2-36
Shock resistance	Shock		500 g / 1 ms	IEC 60068-2-27
	Free fall			IEC 60068-2-32
Enclosure (depending on electrical connection)				see page 3

Mechanical characteristics

Materials	Wetted parts	DIN 17440-1.4404 (AISI 316 L)
	Enclosure	DIN 17440-1.4404 (AISI 316 L)
	Electrical connections	see page 3
Weight (depending on pressure connection and electrical connection)		0.2-0.3 kg

© Danfoss 11-2002

Electrical connections

Type code, page 4					
1	2	5	7	8	3
DIN 43650, Pg 9 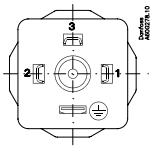	AMP Econoseal J series (male) 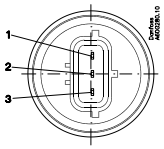	IEC 947-5-2 M12×1 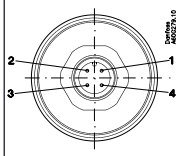	ISO 15170-A1-3.2-Sn (Bayonet plug) 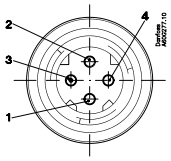	AMP Superseal 1.5 series (male) 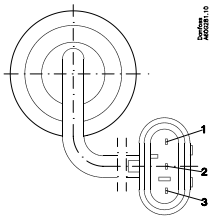	2 m screened cable 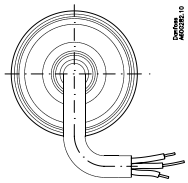
Ambient temperature					
-40 → + 85 °C	-40 → + 85 °C	-25 → +85 °C	-40 → +85 °C	-40 → +85 °C	-30 → +85 °C
Enclosure					
IP 65	IP 67	IP 67	IP 67 / IP 69K	IP 67	IP67
Materials					
Glass filled polyamid, PA 6.6	Glass filled polyamid, PA 6.6[1]	Nickel plated brass, CuZn/Ni	Glass filled polyester, PBT	Glass filled polyamid, PA 6.6[2]	Polyolifin cable with PE shrinkage tubing
Electrical connection, 4-20 mA output (2 wire)					
Pin 1: +supply Pin 2: ÷supply Pin 3: Not used Earth: Connected to MBS housing	Pin 1: +supply Pin 2: ÷supply Pin 3: Not used	Pin 1: +supply Pin 2: Not used Pin 3: Not used Pin 4: ÷supply	Pin 1: +supply Pin 2: ÷supply Pin 3: Ventilation Pin 4: Not used	Pin 1: +supply Pin 2: ÷supply Pin 3: Not used	Brown wire: +supply Black wire: ÷supply Red wire: Not used Orange: Not used Screen: Not connected to MBS housing
Electrical connection, 0-5V, 1-5V, 1-6V, 0-10V output					
Pin 1: +supply Pin 2: ÷supply Pin 3: Output Earth: Connected to MBS housing	Pin 1: +supply Pin 2: ÷supply Pin 3: Output	Pin 1: +supply Pin 2: not used Pin 3: Output Pin 4: ÷supply	Pin 1: +supply Pin 2: Output Pin 3: Ventilation Pin 4: ÷supply	Pin 1: +supply Pin 2: ÷supply Pin 3: Output	Brown wire: Output Black wire: ÷supply Red wire: + supply Orange: Not used Screen: Not connected to MBS housing

[1] Female plug: Glass filled polyester, PBT
[2] Wire: PETFE (teflon)
Protection sleeve: PBT mesh (polyester)

Ordering of standard MBS 3000 with DIN 43650 plug Pg 9

Pressure connection	Pressure range Pe	Type	Code no.
G 1/4 A (EN 837)	0 - 1 bar	MBS 3000 1011-1 AB04	060G1113
	0 - 1.6 bar	MBS 3000 1211-1 AB04	060G1429
	0 - 2.5 bar	MBS 3000 1411-1 AB04	060G1122
	0 - 4 bar	MBS 3000 1611-1 AB04	060G1123
	0 - 6 bar	MBS 3000 1811-1 AB04	060G1124
	0 - 10 bar	MBS 3000 2011-1 AB04	060G1125
	0 - 16 bar	MBS 3000 2211-1 AB04	060G1133
	0 - 25 bar	MBS 3000 2411-1 AB04	060G1430
	0 - 40 bar	MBS 3000 2611-1 AB04	060G1105
	0 - 60 bar	MBS 3000 2811-1 AB04	060G1106
	0 - 100 bar	MBS 3000 3011-1 AB04	060G1107
	0 - 160 bar	MBS 3000 3211-1 AB04	060G1112
	0 - 250 bar	MBS 3000 3411-1 AB04	060G1111
	0 - 400 bar	MBS 3000 3611-1 AB04	060G1109
	0 - 600 bar	MBS 3000 3811-1 AB04	060G1110

Ordering of special versions

MBS 3000

Measuring range

0 - 1 bar	1 0
0 - 1.6 bar	1 2
0 - 2.5 bar	1 4
0 - 4 bar	1 6
0 - 6 bar	1 8
0 - 10 bar	2 0
0 - 16 bar	2 2
0 - 25 bar	2 4
0 - 40 bar	2 6
0 - 60 bar	2 8
0 - 100 bar	3 0
0 - 160 bar	3 2
0 - 250 bar	3 4
0 - 400 bar	3 6
0 - 600 bar	3 8

Pressure reference

Gauge (relativ)	1
Absolute	2

Pressure connection (see page 1)

A B 0 4	G 1/4 A (EN 837)
A B 0 6	G 3/8 A (EN 837)
A B 0 8	G 1/2 A (EN 837)
A C 0 4	1/4 -18 NPT
A C 0 8	1/2-14 NPT
G B 0 4	DIN 3852-E-G1/4, Gasket: DIN 3869-14 NBR

Electrical connection (see pages 1 and 3)

1	Plug, DIN 43650, Pg 9
2	*)Plug, AMP Econoseal, J series, male, excl. female plug
3	Screened cable, 2 m
5	*)Plug, IEC 947-5-2, M12 × 1, male, excl. female plug
7	Plug ISO 15170-A1-3.2-Sn, male, excl. female plug
8	*) Plug, AMP Superseal 1.5 series male, excl. female plug

*) Gauge versions only available as sealed gauge versions

Output signal

1	4 - 20 mA
2	0 - 5 V
3	1 - 5 V
4	1 - 6 V
5	0 - 10 V

Danfoss can accept no responsibility for possible errors in catalogues, brochures and other printed material. Danfoss reserves the right to alter its products without notice. This also applies to products already on order provided that such alterations can be made without subsequential changes being necessary in specifications already agreed.
All trademarks in this material are property of the respective companies. Danfoss and the Danfoss logotype are trademarks of Danfoss A/S. All rights reserved.

DK-6430 Nordborg
Denmark

Grundfos CU 352 Pump Controller

Advanced pump system controller for parallel connected pumps for HVAC and Pressure Boosting Applications

Compatibility

The CU 352 pump controller can control up to six (6) parallel connected pumps in the following manner:

- Direct BUS control: **CRE, CME, VLSE** or **LCSE** pumps
- Direct BUS control: Pumps with Grundfos **CUE** drives
- Digital/Analog control**:** Pumps with external drives (requires **IO 351B** Input/Output module)

HVAC Control Modes

- o Constant Differential Pressure control via remote sensor
  - Multi-zone Differential Pressure control up to 6 zones
    - Priority, Minimum or Energy Saving Mode
- o Quadratic, proportional or constant differential pressure control via local sensor
  - Adjustable control curve (Max flow and control head)
  - Efficiency based sequencing automatically updated
- o Constant Flow
- o Constant Temperature
- o Constant Differential Temperature

Pressure Boosting Control Modes

- o Constant Pressure (pump discharge)
- o Quadratic or Proportional discharge pressure
  - Adjustable control curve (Max flow and min. static head)
- o Constant Pressure (remote sensor)

Pump Cascade Control

- o Efficiency based pump sequencing
  - * Updated automatically when setpoint and/or control head are changed
- o Automatic Pump alternation (run hour based)
- o Standby Pumps (single or multiple)
- o Adjustable minimum time between starts / stops
- o Adjustable maximum starts per hour
- o Pump test run (exercise idle pumps)
- o Clock program
- o Proportional Gain and Integral Time adjustment

Application optimized functions:

- o Secondary (Fallback) Sensor
- o Pump curve data (5th or 2nd order polynomial)
  - * Pre-programmed from factory
- o Flow estimation via pump curve data and pressure measurement across pump(s)
- o Reduced operation (generator backup power) Max. kW limit or max. number of pumps
- o Specific energy calculation (kWh per unit volume)
  - *requires flow sensor input
- o Low Flow Stop (Pressure Boosting) Adjustable low flow setting: Energy saver mode, medium flow or high comfort level

Protection and Monitoring

- o Check valve failure detection (MLE motors)
- o Pump outside duty range protection
  - *keeps all operating pumps on their curve
- o Low suction pressure warning and alarm
- o Primary sensor failure reaction setting
- o Soft pressure build-up (Pipe fill mode)
- o Low system pressure warning and alarm
- o High system pressure shutdown
- o Alarm log, last 24, time stamped
- o Data log graph (20 - 3600 samples/hour) (Flow, speed, setpoint, sensor feedback, kW)
- o BMS/EMS communication (see page 4)

Grundfos CU 352 Pump Controller

CU 352 Control user interface

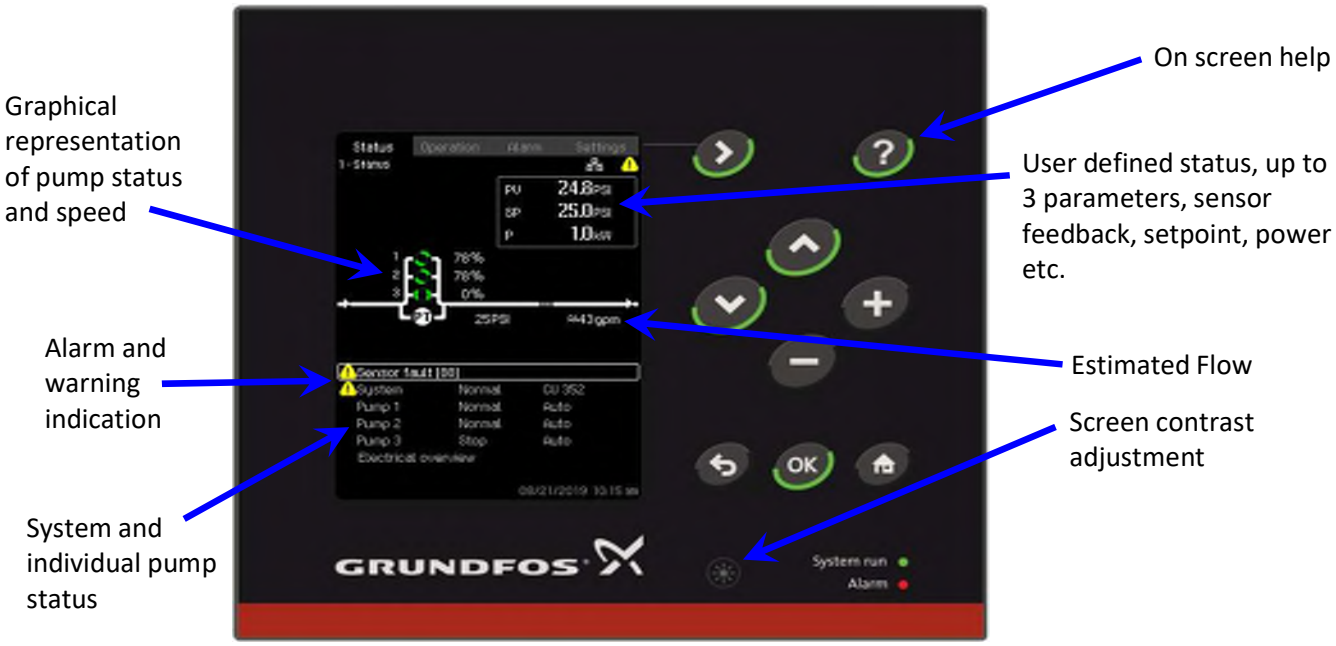

Status of inputs and outputs	Alarms and warnings	Startup Wizard
Electrical overview Shows status of inputs along with wiring landing points [in brackets] 	**Alarm log** - Stores last 24 alarms and warnings. > Time event occurred > Time event cleared > Alarm code for more detailed description. 	**Startup Wizard** Step by Step installation guide > Set time and date format > Remove air/Prime pumps > Check pump rotation > Set primary sensor

Grundfos CU 352 Pump Controller

Sequence of operation

Hydronic Circulation

The system controller shall operate equal capacity variable speed pumps to maintain a variable (quadratic or linear) or constant differential pressure. The system controller shall receive an analog signal [4-20mA] from a remote or pump system mounted differential pressure sensor. The controller shall be able to receive a system suction pressure and system discharge pressure to determine the system differential pressure (two independent analog signals). The controller shall have the means to protect pumps against dry running via a user defined low suction pressure setting.

Pressure Boosting

The system controller shall operate equal capacity variable speed pumps to maintain a constant or variable (quadratic or linear) pressure. The system controller shall receive an analog signal [4-20mA] from a remote or pump system mounted pressure sensor. The controller shall be capable of simulating the effect of a remote mounted pressure sensor by quadratically reducing the system discharge pressure setpoint as a function of reduced flow (friction loss compensation).

Cascade Control

Standard Cascade Control (Pumping Efficiency Based):
The pump system controller shall adjust pump speed as necessary to maintain system set-point pressure as flow demand changes. The pump system controller shall start additional pumps upon determination of an increase in efficiency utilizing factory programmed (5th order polynomial) curve data. When the system pressure is equal to the system set-point, all pumps in operation shall reach equal operating speeds. The pump system controller shall have field adjustable Proportional gain and Integral time (PI) settings for system optimization.

Optional Cascade Control (Pump Start Speed Based):
As flow demand increases the pump speed shall be increased to maintain the system set-point pressure. When the operating pump(s) reach the programable start speed, an additional pump will be started and will increase speed until the system set-point is achieved. When the system pressure is equal to the system set-point, all pumps in operation shall reach equal operating speeds. The pump system controller shall have field adjustable Proportional gain and Integral time (PI) settings for system optimization.

Pumps outside duty range (End of curve protection):
When the pumps are outside their allowable operating range, the controller shall switch on an additional pump, distributing a reduced flow through all pumps in operation moving each pump back into its allowable operating region.

Pump Alternation

All pumps in the system shall alternate automatically based on demand, time and fault. If flow demand is continuous with only one pump in operation, the system controller shall have the capability to alternate the pumps every 24 hours, every 48 hours or once per week. The interval and actual time of the pump change-over shall be field adjustable.

Low Flow Stop (Pressure Boosting)

The system controller shall be capable of detecting low flow allowing for pumps to be switched off in an energy saving mode. Upon detection of low flow, the controller shall increase the system setpoint by 5% (adjustable) to store water in a diaphragm or bladder tank and switch off. The pump shall remain off until the system pressure falls 5% below the system setpoint (adjustable). If system flow is still low when the pump switches back on, the pump shall refill the diaphragm tank to 5% above setpoint and switch off again. If system flow increases above the low flow setting, the pump shall return to normal constant pressure mode maintaining the system setpoint.

Grundfos CU 352 Pump Controller

Technical data

Altitude above sea level

Maximum 6,560 feet (2000 m.)

Ambient Temperature

During operation: -4°F to +140°F (-20°C to +60°C)
During transportation: -4°F to +140°F (-20°C to +60°C)

* At temperatures below 32°F (0°C) the display may react slowly.
* The display should not be exposed to direct sunlight

Relative air humidity

5 to 95%

Enclosure class

UL type 3R when mounted in the front of a panel with UL type rating 1, 2, 3, 3R, 5, 12, 12K or 13. Overall control panel rating of Type 4/4X available on request.

Supply voltage

1 x 100-240 VAC +/- 10% 50/60Hz, PE
(Class 1 equipment)

Power consumption

Maximum 22 W

Backup battery

The optional backup battery can keep the CU352 powered during intermittent power outages.
The CU 352 will monitor the following:

- short circuit
- wrong polarity
- defective battery
- battery missing
- low battery voltage

Digital inputs (3)

Open-circuit voltage	24 VDC
Closed-circuit current	5 mA, DC
Frequency range	0-4 Hz

Analog inputs (3)

Input current and voltage	0-20 mA 4-20 mA 0-10 V
Tolerance	± 3.3 % of full scale
Repetitive accuracy	± 1 % of full scale
Input resistance, current	< 250 Ω
Input resistance, voltage	> 50 kΩ ± 10%
Supply to sensor	24 V, 30 mA short-circuit protected

Relay outputs (2)

Normally open contacts	C, NO
Maximum contact load	240 VAC, 2 A
Minimum contact load	5 VDC, 10 mA

Communication protocols

For connection to building management systems, Communication Interface Modules (CIM) can be supplied with the CU 352 controller.

Protocol	CIM Type
LONworks	110
PROFIBUS DP	150
PROFINET IO	500
Modbus RTU	200
Modbus TCP	500
BACnet MS/TP	300
BACnet IP	500
Ethernet IP	500

MLE

Product compatibility

- **Multi-stage**: CRE, CRIE, CRNE, MTRE, MTSE, SPKE, CME
- **Single-stage**: TPE2, TPE3, VLSE, LCSE
- **Systems**: Hydro MPC-E, Hydro Multi-E, Hydro Multi-B, Hydro Solo-E, CMBE home booster.

TM06 5684 2219

MLE is a dedicated motor-drive system for pumps and other applications. Pumps equipped with MLE motors overcome application challenges and save energy in a variety of pump installations in order to reach the lowest Life Cycle Cost (LCC) possible.

Integrated drives

Integrated drives are beneficial because they are installed on non-controlled pumps at no additional installation cost. Once the power supply is connected and the pump is fitted into the pipe system, they are ready to operate at the desired setpoint.

Operating pumps with MLE also reduces CAPEX (capital expense) of additional cabinets, components and facility space by having the entire pump system in line with the pipe system.

MLE is the result of Grundfos' efficient motor technology and it is an efficient IE5 motor, with an efficiency much higher than NEMA Premium, which minimizes OPEX (operating expense).

Robustness throughout the system

The Grundfos full line supply of components, from the power supply to pipe fittings, provides the most robust solutions:

- Built-in protection against power supply disturbances, environment and motor load.
- MLE is designed to mitigate bearing currents.
- No cooling fans in drive (wear part).

MLE product range

1 x 200-240 V	0.33 - 2.0 HP
3 x 200-240 V	1.5 - 7.5 HP
3 x 440-480 V	0.33 - 15 HP*

* Up to 30 HP available with different specifications.

Features and benefits

Feature	Benefit
Application control	
Control modes	Easy commissioning to match system design criteria.
Multipump function including alternating, back-up, or cascade	Neglects the need for external controllers and continuous operation by redundant pump and sensor if either component fails.
Differential pressure or temperature with 2 sensors	Lower CAPEX by common inexpensive sensor types.
Pump curve adjustments and run at power limit	Stabilizes unstable pump curves and extends operating range.
Setpoint influence	Adapts QH to internal or measured values.
Energy saving for lower OPEX	
AUTOADAPT or FLOWLIMIT	Continuously adapts to the most efficient curve and reduces pressure loss in the system.
Low-flow stop function	Improved energy optimization and comfort.
ECM motor that exceeds the NEMA Premium efficiency levels	ECM motors have significantly lower motor loss than NEMA Premium motors. This alone reduces energy consumption by 10 % with a typical pump load profile.
Condition monitoring	
Limit Exceed function	Any value can be supervised to protect the system.
Loss of prime and dry run	Protects the shaft seal.
Cavitation protection	Protects the impellers.
Flow estimate and heat energy monitor	Monitoring of the heating system's performance.
Overload and temperature	Protects the frequency converter and motor.
Stop at minimum speed	Protects the pump and saves energy.
Motor bearings monitors	Ensures uptime by preventive maintenance.
Robustness	
Operating temperature between -4 and +140 °F	Allows installation almost anywhere and high margins in control rooms, resulting in longer product service life.
Impulse transient resistance (VDE0160 compliant)	Resistance against lightning, ESD, switching impulses and utility fault clearing.
Interruptions and voltage sags (SEMIF47 compliant)	Keeps process running and derates the pump to the available power.
Line harmonics resistance (EN 61000-4-13, class 3)	Built-in compensation of disturbance to avoid overheating of motor windings and maintaining a steady pump operation.
Built-in RFI filters	Neglects the need for external components.
NEMA3 / NEMA4 enclosures	Installed in-line to pipe systems at no added cost.

Grundfos iSOLUTIONS

Grundfos iSOLUTIONS delivers the optimal combination of pumps, drives and auxiliary components for the specific application, incorporating special features and functions, and building on application knowledge and experience.

Grundfos iSOLUTIONS allows easy integration of pumps, drives, measurements, controls, protections, and communication, saving you valuable engineering, installation and commissioning time.

To learn more, visit: www.grundfos.com/isolutions

Sensors

MLE is sensor-independent and controls the pump to any measured feedback.

Grundfos offers several sensors to be used in pump solutions:

- pressure sensors
- temperature sensors
- differential pressure sensors
- differential temperature sensors
- flow meters.

Grundfos GO Remote

Grundfos GO Remote for iOS and Android ensures easy and quick commissioning, monitoring and servicing of pumps with MLE motors.

TM07 4786 2419

Technical specifications

Motor data			
Speed range	**Operating range (rpm)**	**Constant power (rpm)**	**Constant torque (rpm)**
	180-2000	1740-2000	900-1740
	360-4000	3480-4000	1750-3480
	360-4000	3400-4000	2000-3400
	500-5900	4000-5900	-
Voltage tolerances	± 10 %		
Frequency	50-60 Hz ± 5 %		
Network	TN/TT (optional: IT) according to IEC 60364		
Environmental limits			
Degree of protection	NEMA3 / NEMA4		
Operating temp.	-4 to +140 °F derating above 122 °F		
Storage temp.	-4 to +140 °F		
Altitude	0-3280 ft without derating / 0-11480 ft with derating		
Humidity	0-95 %, non-condensing		
Inputs/outputs	**FM100**	**FM200**	**FM300**
Digital inputs	1	1	2
Digital inputs/ outputs	1	1	2
Relay outputs	-	2	2
Analog inputs	1 (only V)		
Pt100/Pt1000 inputs	-	-	2
+5 V supply	Y	Y	Y
+24 V supply	-	Y	Y
Grundfos Digital Sensor input	-	Y	Y
LiqTec sensor input	-	-	Y
Digital inputs (dedicated)	0-5 V		
Digital inputs/ outputs	0-24 V, resistive or inductive		
Analog input	0-20 mA / 4-20 mA, 0.5 - 3.5 V / 0-5 V / 0-10 V		
Relay output	250 V AC/30 V DC, max. continuous current 2 A rms		
Connectivity			
Wireless (radio)	Yes, GENIair		
RS-485	Yes, GENIair		
Communication options	• LONWorks (CIM 100) • PROFIBUS DP (CIM 150) • Modbus RTU (CIM 200) • GSM/GPRS (CIM 250) • 3G/4G cellular (CIM 260) • GiC/GRM 3G/4G (CIM 280) • BACnet MS/TP (CIM 300) PROFINET IO (CIM 500) • Modbus TCP (CIM 500) • BACnet IP (CIM 500) • Ethernet IP (CIM 500)		
Compliance			
Conformity to standards	CE, EAC, RCM, CCC, and cURus (UL)		
Harmonics	IEC/EN 61000-3-12		
EMC	Up to 10.0 HP (7.5 HP low speed): Category C1 according to EN 61800-3, corresponding to CISPR 11, class B (residential area) Above 10.0 HP (7.5 HP low speed): Category C3 according to EN 61800-3, corresponding to CISPR 11, class A, group 2 (industrial area)		

© Copyright Grundfos Holding A/S

The name Grundfos, the Grundfos logo, and **be think innovate** are registered trademarks owned by Grundfos Holding A/S or Grundfos A/S, Denmark. All rights reserved worldwide.

99689406 0719

ECM: 1264915

GRUNDFOS A/S . DK-8850 Bjerringbro . Denmark
Telephone: +45 87 50 14 00
www.grundfos.com

DIVISION 15

MECHANICAL

SECTION 15000

MECHANICAL SYSTEMS

PART 1 GENERAL

1.01 SECTION INCLUDES

A. Furnishing and installing complete mechanical systems as indicated on the drawings and as described in the applicable sections of this Division of the Specifications *with exceptions noted in Part 1.02.*

1.02 RELATED SECTIONS

A. Section 02315 - Excavation.

B. Section 02316 - Fill and Backfill.

C. Section 02510 - Water System.

D. Section 09900 - Paints and Coatings.

E. Section 15065 - Motors for Mechanical Equipment. *(To Be Furnished and Installed by Others (i.e. Electrical))*

F. Section 15128 – Gauges *(To Be Furnished and Installed by Others (i.e. Electrical))*

G. Section 15130 - Seismic Control.

H. Section 15140 - Ventilating System. *(To Be Furnished and Installed by Others (i.e. Electrical))*

I. Section 15145 - Pump Station Plumbing.

J. Section 15810 - Ducts.

K. Section 15834 - Axial Fans. *(To Be Furnished and Installed by Others (i.e. Electrical))*

1.03 REFERENCES

A. See applicable Sections.

1.04 SPECIFICATIONS

A. For purposes of clarity, the mechanical specification division is subdivided into a number of sections. This subdivision is not intended to define individual trades or limits of work which may be performed by any one trade. Therefore, each trade shall be familiar with all sections of the specifications so that the final installations will be a complete and consistent project.

1.05 SUBMITTALS

A. See Section 01300 - Administrative Requirements, for submittal procedures.

B. Product Data: Provide data on pipe materials, pipe fittings, valves, equipment and accessories. Provide manufacturers catalog information.

C. Project Record Documents: Record actual locations of mechanical equipment and appurtenant items.

1.06 REGULATORY REQUIREMENTS

A. Perform Work and install all materials in accordance with latest rules prescribed by local and/or State codes and ordinances.

B. When drawings or specifications call for sizes or grade different than required by the governing codes, the Contractor shall provide and install the larger size or higher grade.

1.07 DELIVERY, STORAGE, AND PROTECTION

A. Receive, store, and handle products, materials and equipment, at the building site, in a manner which will prevent loss, deterioration and damage. Schedule deliveries to minimize long-term storage at the project site.

B. Accept materials on site in shipping containers with labeling in place. Inspect for damage.

C. Provide temporary end caps and closures on piping and fittings. Maintain in place until installation.

E. Protect piping systems from entry of foreign materials by temporary covers, completing sections of the work, and isolating parts of completed system.

PART 2 PRODUCTS

2.01 EQUIPMENT

A. By descriptions, catalog numbers, and specific designations, standards are established for manufactured items which the Contractor shall furnish as required by the Division. Acceptable equals may be submitted to the Engineer for review.

B. Irrespective of which manufacturer's product is proposed to be furnished, the Contractor shall furnish too the Engineer shop drawings and complete up-to-date engineering data sheets and catalog information for acceptance before commitments to purchase are made. The Contractor will be required to submit data for all equipments, materials and miscellaneous items as required in the General Conditions.

1. All shop drawings shall be submitted at the same time, neatly organized in a soft-back cover. Provide a Letter of Transmittal describing the equipment and materials proposed. No piece-meal submittals will be accepted.

2. Suppliers of equipment shall also provide an additional four (4) copies of submittal data which shall be turned over to the Engineer for preparation of Operating and Maintenance Manuals.

C. Equipment Deviations.

1. Where the Contractor proposes to use an item of equipment other than that specified or detailed on the drawings which require any redesign of the structure, partitions, foundations, piping, wiring, or any other part of mechanical, electrical, or building lay-outs; all such redesign, and all new drawings and detailing required therefore, shall be prepared by the Contractor at his own expense and acceptable to the Engineer; at no additional expense to the Owner.

2. Where such accepted deviations require different quantities and arrangements of piping, wiring, conduit, and equipment from that specified or indicated on the drawings; the Contractor shall furnish and install any such piping, structural supports, insulation, controllers, motors, starters, electrical wiring and conduit, and any other additional equipment required by the revised systems; at no additional cost to the Owner.

D. Unfit or Damaged Materials. All materials or work of unsound or unfit character, or which may have become damaged during or after installation, shall be removed and reconstructed or refinished by the Contractor to the satisfaction of the Engineer immediately upon proper notice. The expense of doing so or cost of delays and of making good the work affected by the damage shall be borne by the Contractor at fault. No extension of time will be allowed for correction of faulty work.

E. Site Inspection. Contractor and Subcontractors will be held to requirements that they examine the building site and understand the conditions under which they will be obliged to operate in performing their part of the contract. No allowance shall be made subsequently in this connection, in behalf of the Contractors, for any error through negligence on their part.

F. Openings for Work.

1. Contractor will be required to obtain and provide information for and locate all necessary openings for the work occurring in concrete foundation walls or in other areas of the buildings where openings are required.

2. Contractor shall provide and locate any necessary sleeves.

PART 3 EXECUTION

3.01 INSTALLATION

A. Install in mechanical systems as described in appropriate Sections.

B. Lubrication of Equipment.

1. The Contractor shall have all pieces of mechanical and plumbing equipment properly lubricated before turning the building over to the Owner. Linen tags shall be attached to each piece of equipment showing the date of lubrication and the lubricant used.

2. Furnish the Owner with a typewritten list, in triplicate, of each item lubricated and the type of lubricant used. Provide the Engineer with a copy of same.

C. Testing, Adjusting and Balancing.

1. All systems shall be tested as described in the appropriate Sections. Each piece of equipment and all of the systems shall be adjusted to insure proper functioning of all controls, maintenance of operations, elimination of noise and vibration, and left in first-class operating conditions.

D. Operating and Maintenance Manuals. Each Manual shall be bound in a hard-backed loose-leaf, 3-hole binder with the name of the projects and the name of the Engineer printed on the front and spine of the Manual. Provide a master index file at the beginning of the Manual showing all items included in the book of instructions. Use plastic tabs indexed for all sections of the book. Three (3) copies of the Operating and Maintenance Manual shall be provided for the project and submitted to the Engineer for his approval and then turned over to the Owner.

1. Manuals shall contain the following information on the Title Sheet:
   a. Name of Project
   b. Date Contract Awarded
   c. Date Work Commenced
   d. Date of Completion and Acceptance by Owner
   e. Name of Engineer
   f. Names of Contractors, including Subcontractors

2. Operating Instructions section of Manuals shall include the following:
   a. General description of system.
   b. Step-by-step procedure to follow in putting each piece of mechanical equipment in operation to insure correct operation of complete system.
   c. An acceptable "Major Starting Equipment" schedule to be included for each electrical motor serving ventilating and plumbing systems, including "Area Served", "Disconnect Switch Location", and "Electrical Panel Switch"

3. Maintenance Instructions section of Manuals shall include the following:
   a. Manufacturer's maintenance instructions for each piece of mechanical equipment installed in the projects. Instructions should include installation instructions, parts numbers and lists, operation instructions of equipment, name of vendor, and maintenance lubrication. Shall include a section for "Ventilating Equipment" and "Plumbing Equipment".
   b. A summary list of each piece of equipment, location, type of lubrication, and frequency of lubrication.

E. Pipe and Equipment Identification.

1. Contractor shall identify all new exposed and accessible pipe with self-adhesive labels as manufactured by Emblem Tape and Label Company, or acceptable equal, with minimum 2-inch arrows and 1 1/2-inch tape. Labels shall be applied according to instructions and recommendations by the manufacturer after the final coat of paint has been applied to piping, where painting is required.

2. Labels shall be of a proper size and lettering to suit the piping on which they are installed. Install labels at each valve and where piping passes through a wall or floor and at each hanger, 10 foot maximum.

3. Suitable direction arrows shall be installed on the piping at each piece of equipment to properly and easily identify the direction of flow in the pipe.

F. Valve Tags.

1. Tag each new valve and disconnect switch with a factory-stamped round brass tag, as manufactured by Seton Nameplate Corporation; size 1 1/2" with 3/8" high letters. Tags shall be numbered consecutively from a number provided by Owner. Each starter shall be provided with a 3" long bakelite nameplate, having the name of the equipment controlled engraved on the plate. Tags shall be securely fastened with brass chain and ring.

2. Provide a typewritten list, in duplicate, to the Owner indicating the following:
   a. Name of valve or equipment tagged.
   b. Tag number.

3. This contract will not be considered completed until all such valves are tagged and the list received by the Owner.

END OF SECTION

SECTION 15065

MOTORS FOR MECHANICAL EQUIPMENT

PART 1 GENERAL

1.01 SECTION INCLUDES

A. Single phase electric motors.

B. Three phase electric motors.

1.02 RELATED SECTIONS

A. Section 16155 - Equipment Wiring: Electrical characteristics and wiring connections.

B. Section 16423 - Enclosed Motor Controllers.

1.03 REFERENCES

A. ABMA STD 9 - Load Ratings and Fatigue Life for Ball Bearings; American Bearing Manufacturers Association, Inc.

B. ABMA STD 11 - Load Ratings and Fatigue Life for Roller Bearings; American Bearing Manufacturers Association, Inc.

C. IEEE 112 - IEEE Standard Test Procedure for Polyphase Induction Motors and Generators; Institute of Electrical and Electronic Engineers.

D. NEMA MG 1 - Motors and Generators; National Electrical Manufacturers Association.

E. NFPA 70 - National Electrical Code; National Fire Protection Association.

F. Use the latest edition of the above reference standards as of the date of the project.

1.04 SUBMITTALS

A. See Section 01300 - Administrative Requirements, for submittal procedures.

B. Product Data: Provide wiring diagrams with electrical characteristics and connection requirements.

C. Test Reports: Indicate test results verifying nominal efficiency and power factor for three phase motors larger than 1/2 horsepower.

D. Manufacturer's Installation Instructions: Indicate setting, mechanical connections, lubrication, and wiring instructions.

E. Operation Data: Include instructions for safe operating procedures.

F. Maintenance Data: Include assembly drawings, bearing data including replacement sizes, and lubrication instructions.

1.05 QUALITY ASSURANCE

A. Manufacturer Qualifications: Company specializing in manufacture of electric motors for uses indicated, and their accessories, with minimum three years documented product development, testing, and manufacturing experience.

B. Conform to NFPA 70.

C. Provide certificate of compliance from authority having jurisdiction indicating approval of high efficiency motors.

D. Products Requiring Electrical Connection: Listed and classified by Underwriters' Laboratories, Inc. as suitable for the purpose specified and indicated.

1.06 DELIVERY, STORAGE, AND HANDLING

A. Protect motors stored on site from weather and moisture by maintaining factory covers and suitable weather-proof covering. For extended outdoor storage, remove motors from equipment and store separately.

1.07 WARRANTY

A. See Section 01780 - Closeout Submittals, for additional warranty requirements.

B. Provide five-year manufacturer warranty for motors larger than 20 horsepower.

PART 2 PRODUCTS

2.01 GENERAL CONSTRUCTION AND REQUIREMENTS

A. Electrical Service: Refer to Section 16155 for required electrical characteristics.

B. Construction:

1. Open drip-proof type except where specifically noted otherwise.

2. Design for continuous operation in 40 degrees C environment.

3. Design for temperature rise in accordance with NEMA MG 1 limits for insulation class, service factor, and motor enclosure type.

4. Motors with frame sizes 254T and larger: Energy Efficient Type.

C. Explosion-Proof Motors: UL approved and labeled for hazard classification, with over temperature protection.

D. Visible Nameplate: Indicating motor horsepower, voltage, phase, cycles, RPM, full load amps, locked rotor amps, frame size, manufacturer's name and model number, service factor, power factor, efficiency.

E. Wiring Terminations:

1. Provide terminal lugs to match branch circuit conductor quantities, sizes, and materials indicated. Enclose terminal lugs in terminal box sized to NFPA 70, threaded for conduit.

2. For fractional horsepower motors where connection is made directly, provide threaded conduit connection in end frame.

2.02 APPLICATIONS

A. Exception: Motors less than 250 watts, for intermittent service may be the equipment manufacturer's standard and need not conform to these specifications.

B. Single phase motors for shaft mounted fans, oil burners, and centrifugal pumps: Split phase type.

C. Single phase motors for shaft mounted fans or blowers: Permanent split capacitor type.

D. Single phase motors for fans, pumps, blowers, and air compressors: Capacitor start type.

E. Single phase motors for fans, blowers, and pumps: Capacitor start, capacitor run type.

F. Motors located in exterior locations, direct drive axial fans, explosion proof environments, and dust collection systems: Totally enclosed type.

G. Motors located in outdoors: Totally enclosed weatherproof epoxy-treated type.

H. Motors located outdoors and in draw through cooling towers: Totally enclosed weatherproof epoxy-sealed type.

2.03 SINGLE PHASE POWER - SPLIT PHASE MOTORS

A. Starting Torque: Less than 150 percent of full load torque.

B. Starting Current: Up to seven times full load current.

C. Breakdown Torque: Approximately 200 percent of full load torque.

D. Drip-proof Enclosure: Class A (50 degrees C temperature rise) insulation, NEMA Service Factor, pre-lubricated sleeve or ball bearings.

E. Enclosed Motors: Class A (50 degrees C temperature rise) insulation, 1.0 Service Factor, pre-lubricated ball bearings.

2.04 SINGLE PHASE POWER - PERMANENT-SPLIT CAPACITOR MOTORS

A. Starting Torque: Exceeding one fourth of full load torque.

B. Starting Current: Up to six times full load current.

C. Multiple Speed: Through tapped windings.

D. Open Drip-proof or Enclosed Air Over Enclosure: Class A (50 degrees C temperature rise) insulation, minimum 1.0 Service Factor, pre-lubricated sleeve or ball bearings, automatic reset overload protector.

2.05 SINGLE PHASE POWER - CAPACITOR START MOTORS

A. Starting Torque: Three times full load torque.

B. Starting Current: Less than five times full load current.

C. Pull-up Torque: Up to 350 percent of full load torque.

D. Breakdown Torque: Approximately 250 percent of full load torque.

E. Motors: Capacitor in series with starting winding; provide capacitor-start/capacitor-run motors with two capacitors in parallel with run capacitor remaining in circuit at operating speeds.

F. Drip-proof Enclosure: Class A (50 degrees C temperature rise) insulation, NEMA Service Factor, pre-lubricated sleeve bearings.

G. Enclosed Motors: Class A (50 degrees C temperature rise) insulation, 1.0 Service Factor, pre-lubricated ball bearings.

2.06 THREE PHASE POWER - SQUIRREL CAGE MOTORS

A. Starting Torque: Between 1 and 1-1/2 times full load torque.

B. Starting Current: Six times full load current.

C. Power Output, Locked Rotor Torque, Breakdown or Pull-Out Torque: NEMA Design B characteristics.

D. Design, Construction, Testing, and Performance: Conform to NEMA MG 1 for Design B motors.

E. Insulation System: NEMA Class B or better.

F. Testing Procedure: In accordance with IEEE 112. Load test motors to determine free from electrical or mechanical defects in compliance with performance data.

G. Motor Frames: NEMA Standard T-Frames of steel, aluminum, or cast iron with end brackets of cast iron or aluminum with steel inserts.

H. Thermistor System (Motor Frame Sizes 254T and Larger): Three PTC thermistors imbedded in motor windings and epoxy encapsulated solid state control relay for wiring into motor starter; refer to Section 16423.

I. Bearings: Grease lubricated anti-friction ball bearings with housings equipped with plugged provision for re-lubrication, rated for minimum ABMA STD 9, L-10 life of 20,000 hours. Calculate bearing load with NEMA minimum V-belt pulley with belt center line at end of NEMA standard shaft extension. Stamp bearing sizes on nameplate.

J. Sound Power Levels: To NEMA MG 1.

K. Weatherproof Epoxy Sealed Motors: Epoxy seal windings using vacuum and pressure with rotor and starter surfaces protected with epoxy enamel; bearings double shielded with waterproof non-washing grease.

L. Nominal Efficiency: As scheduled at full load and rated voltage when tested in accordance with IEEE 112.

M. Nominal Power Factor: As scheduled at full load and rated voltage when tested in accordance with IEEE 112.

PART 3 EXECUTION

3.01 INSTALLATION

A. Install in accordance with manufacturer's instructions.

B. Install securely on firm foundation. Mount ball bearing motors with shaft in any position.

C. Check line voltage and phase and ensure agreement with nameplate.

END OF SECTION

SECTION 15128

GAUGES

PART 1 GENERAL

1.01 SECTION INCLUDES

A. Pressure gauges and pressure gauge taps.

1.02 REFERENCES

A. ASME B40.1 - Gauges - Pressure Indicating Dial Type - Elastic Element; The American Society of Mechanical Engineers.

B. UL 393 - Indicating Pressure Gauges for Fire-Protection Service; Underwriters Laboratories Inc.

C. Use the latest edition of the above reference standards as of the date of the project.

1.03 SUBMITTALS

A. See Section 01300 - Administrative Requirements, for submittal procedures.

B. Product Data: Provide list that indicates use, operating range, total range and location for manufactured components.

C. Project Record Documents: Record actual locations of components and instrumentation.

1.04 ENVIRONMENTAL REQUIREMENTS

A. Do not install instrumentation when areas are under construction, except for required rough-in, taps, supports and test plugs.

PART 2 PRODUCTS

2.01 PRESSURE GAUGES

A. Gauge: ASME B40.1, UL 393 drawn steel case, phosphor bronze bourdon tube, rotary brass movement, brass socket, with front re-calibration adjustment, black scale on white background.

1. Case: Steel with brass bourdon tube.

2. Size: 3-1/2-inch diameter.

3. Mid-Scale Accuracy: One percent.

4. Scale: Psi.

2.02 PRESSURE GAUGE TAPS

A. Gauge Cock: Tee or lever handle, brass for maximum 150 psi.

2.03 STATIC PRESSURE GAUGES

A. 3-1/2-inch diameter dial in metal case, diaphragm actuated, black figures on white background, front re-calibration adjustment, 2 percent of full-scale accuracy.

B. Accessories: Static pressure tips with compression fittings for bulkhead mounting, 1/4-inch diameter tubing.

PART 3 EXECUTION

3.01 INSTALLATION

A. Install in accordance with manufacturer's instructions.

B. Install pressure gauges with pulsation dampers. Provide gauge cock to isolate each gauge.

E. Provide instruments with scale ranges selected according to service with largest appropriate scale.

F. Install gauges in locations where they are easily read from normal operating level. Install vertical to 45 degrees off vertical.

G. Adjust gauges to final angle, clean windows and lenses, and calibrate to zero.

H. Locate test plugs adjacent to pressure gauges and pressure gauge taps.

END OF SECTION

SECTION 15130

SEISMIC CONTROL

PART 1 GENERAL

1.01 SECTION INCLUDES

A. All labor, materials and equipment necessary to complete the seismic and vibration work for the mechanical systems for the pump station.

1. Design and installation of this work shall be based on the Seismic Zone III of the Uniform Building Code, current edition, and other standards listed below.

2. Work shall include all mechanical isolated and non-isolated equipment and piping systems, 1 1/2" and larger.

1.02 REFERENCES

A. Uniform Building Code, current edition.

B. NFPA Bulletin 90A, current edition.

C. UL Standard 181.

D. Tri-Services Manual, Fagel, etal

E. SMACNA Guidelines for Seismic Restraints of Mechanical Systems.

1.03 SUBMITTALS

A. See Section 01300 - Administrative Requirements, for submittal procedures.

B. Product Data: Provide data on all materials and accessories. Provide manufacturers catalog information.

C. Project Record Documents: Record actual type and locations of all equipment.

D. Submittal data prior to fabrication shall include, but not be limited to, the following:

1. Complete engineering calculation and shop drawings for all seismic requirements for all new piping to be isolated and/or restrained.

2. The professional stamp of the Engineer who is responsible for the design and operation of the Seismic System.

3. Details for all seismic bracing with snubbers proposed for items in this specification and on the drawings.

4. Clearly outlined procedures for installing and adjusting the seismic bracing, anchors and snubbers.

5. The size, loading, and location of pipe restraints with a plan and complete description of the system.

1.04 SEISMIC REQUIREMENTS AND QUALIFICATIONS

A. The mechanical contractor shall be responsible for supplying and installing equipment, vibration isolators, flexible connections, anchors, inserts, hangers and attachments, supports, seismic snubbers and bracing to comply with UBC.

1. All supports, hangers, bases, and bracing for equipment shall be designed by a professional engineer employed by the restraint manufacturer, qualified with seismic experience in bracing for mechanical equipment.

2. Shop drawings submitted for earthquake bracing and anchors shall bear the Engineer's signed professional seal.

3. The Contractor shall require all equipment suppliers to furnish equipment that meets the seismic code, with bases designed to receive seismic bracing and/or anchorage. All mechanical equipment bracing to be used in the projects shall be designed from the Equipment Shop Drawings certified correct by the equipment manufacturer for Seismic Zone III with direct anchorage capability.

4. The accepted manufacturer or supplier shall be totally responsible for the design, fabrication, installation, and operation of the Vibration and Seismic Bracing System specified herein for isolated and non-isolated equipment, piping and ductwork.

1.05 REGULATORY REQUIREMENTS

A. Perform Work and install all materials in accordance with latest rules prescribed by local and/or State codes and ordinances.

B. When drawings or specifications call for sizes or grade different than required by the governing codes, the Contractor shall provide and install the larger size or higher grade.

1.07 DELIVERY, STORAGE, AND PROTECTION

A. Receive, store, and handle products, materials and equipment, at the building site, in a manner which will prevent loss, deterioration and damage. Schedule deliveries to minimize long-term storage at the project site.

B. Accept valves on site in shipping containers with labeling in place. Inspect for damage.

PART 2 PRODUCTS

2.01 SEISMIC EQUIPMENT

A. Restrain and vibration isolation equipment and systems shall be as designated by the seismic engineer, and as indicated on the shop drawings.

B. Manufacturers and Suppliers. Manufacturers and suppliers of restraint and vibration isolation equipment and systems accepted for use by the Contractor are Mason Industries, Inc., Korfund, Amber/Booth Co., Vibration Mountings and Control Co., or other acceptable equals.

PART 3 EXECUTION

3.01 EXAMINATION

A. Verify that pump station plumbing has been installed according to project drawings.

3.02 INSTALLATION

A. Install in accordance with manufacturer's written instructions and recommendations; and accepted shop drawings.

B. All mechanical piping shall be braced, snubbed, or supported to withstand seismic disturbances. Furnish all engineering, labor, materials, and equipment to provide protection against seismic disturbances as specified herein.

1. Piping. All new isolated and non-isolated piping, 1 1/2" I.D. and larger, shall be protected in all planes by restraints to accommodate thermal movement as well as restrain seismic motion. Locations shall include, but not be limited to, the following:
   a. At all drops to equipment and at flexible connections.
   b. At all 45 degree or greater changes in direction of pipe.
   c. At horizontal runs of pipe, not to exceed 30 feet O.C. spacing.
   d. Piping shall be restrained by a cable restraining system using a minimum of two 2) cables at all restraint points.
   e. Shop drawings shall be submitted with the locations of all restraints, shown on a floor plan of the building, and noting the size and type of restraint to be used.

2. Equipment Restraint. Restraints for equipment shall be as recommended by the manufacturer of the restraint systems.

END OF SECTION

SECTION 15140

VENTILATING SYSTEM

PART 1 GENERAL

1.01 SECTION INCLUDES

A. Furnishing and installing the ventilating system, complete, in the new pump station, as described herein and as indicated on the drawings; to include exhaust fans, louvers, duct work, and appurtenant items.

1. All items obviously necessary for complete and operating installations shall be included with the majority of the items described herein.

1.02 RELATED SECTIONS

A. Section 15130 - Seismic Control.

B. Section 15810 - Ducts.

C. Section 15834 - Axial Fans.

D. Division 16 - ELECTRICAL. All electrical work for connecting ventilating equipment.

1.03 REFERENCES

A. Applicable Air Moving and Conditioning Association (AMCA) Standards.

B. ASTM Publications:

1. A 167 - Stainless and Heat-Resisting Chromium-Nickel Steel Plate, Sheet, and Strip.

2. A 525 - Steel Sheet, Zinc-Coated (Galvanized) by the Hot-Dip Process, General Requirements.

C. American Society of Heating, Refrigeration, and Air-Conditioning Engineers (ASHRAE) Publication: Guide and Data Book, Equipment.

D. National Fire Protection Association (NFPA) Codes:

1. No. 90A - Air Conditioning and Ventilating Systems.

2. No. 91 -- Blower and Exhaust Systems.

E. Sheet Metal and Air Conditioning Contractors National Association (SMACNA) Publication: "SMACNA" Air Duct Leakage Test Manual, Current Edition.

1.04 SUBMITTALS

A. See Section 01300 - Administrative Requirements, for submittal procedures.

B. Product Data: Provide data on all ventilating equipment and accessories. Provide manufacturers catalog information; and indicate performance data and ratings.

1.05 QUALITY ASSURANCE

A. Product Conformance. Where materials and equipment are specified to conform to the requirements of the Underwriters' Laboratories, Inc. or the Air Moving and Conditioning Association, Inc., the Contractor shall submit proof of such conformance.

B. The label or listing of the specified agency will be acceptable evidence. In lieu of such label or listing, the Contractor may submit a written certificate from any nationally-recognized testing agency adequately equipped and competent to perform such services, stating that items have been tested and that the units conform to the requirements specified herein, including methods of testing of the specified agencies.

C. The system installations shall conform to the requirements of the National Fire Protection Association, Standards No. 90A, No. 91 and No. 96.

1.06 REGULATORY REQUIREMENTS

A. Perform Work in accordance with State of Utah plumbing code.

1.07 DELIVERY, STORAGE, AND PROTECTION

A. Accept equipment on site in shipping containers with labeling in place. Inspect for damage.

B. Store and handle products, materials and equipment, at the building site, in a manner which will prevent loss, deterioration and damage.

C. Store equipment and materials in clean dry places. Protect from weather, dirt, fumes, water, construction debris, and physical damage.

D. Comply with manufacturer's rigging and installation instructions for unloading equipment and materials, and for moving them to final locations.

E. Schedule deliveries to minimize long-term storage at the project site.

F. Do not install damaged equipment and materials; replace with new items.

1.08 ENVIRONMENTAL REQUIREMENTS

A. Do not install underground piping when bedding is wet or frozen.

PART 2 PRODUCTS

2.01 GENERAL

A. Capacities. Capacities of equipment and materials shall be not less than those indicated. If capacities are not shown, the capacities shall be as recommended by the manufacturers of the equipment for the intended use of the equipment.

B. Wiring Diagrams. Submit the manufacturer's electrical requirements for power supply wiring for all equipment needing electrical supply. Submit manufacturer's ladder-type wiring diagrams for inter-lock and control wiring. Clearly differentiate between portions of wiring that are factory-installed and portions to be field-installed.

C. Maintenance Data. Submit manufacturer's data and parts list for each type of equipment, control, and accessory; including "trouble-shooting" maintenance guide. Include this data and product data in maintenance manual; in accordance with requirements of these specifications.

2.02 LOUVERS

A. Wall Louvers. Wall louvers shall have a galvanized steel frame of 4-inch x 1 1/2-inch x 14-gauge box type channel; blades shall be 16-gauge galvanized steel with weather strip both edges, center to center blade spacing of approximately 4-inches, all blades to operate in unison, blade swing to be 45°; axles to be 1/2-inch diameter rust-proof steel; bearings to be self-lubricated ferrule type, pushed into a frame; linkage shall consist of 1/4-inch diameter brass pin and retainer with 3/4-inch x 3/16-inch tie bar; manual operator; screen to be 14 x 18 mesh galvanized steel and 1/2-inch mesh galvanized hardware cloth. Louvers shall be of the size indicated on the drawings.

2.03 GRAVITY TYPE ROOF VENTILATORS

A. Gravity type roof ventilators shall be of the size indicated on the drawings. The ventilators shall be designed to be installed in an opening in the roof; and for free discharge of air, as shown on the drawings. Ventilators shall be Type PR Roof Ventilators as manufactured by Loren Cook Company or Equal.

2.04 WALL MOUNTED EXHAUST FANS

A. The wall exhaust fans shall be wall mounted, direct drive, cast aluminum propeller exhaust ventilator with spun aluminum weather hood.

B. Certification. Fans shall be manufactured at an ISO 9001 certified facility. Fans shall be listed by Underwriters Laboratories (UL 705).

C. Construction.

1. Fans shall be of bolted and welded construction utilizing corrosion resistant fasteners. The spun aluminum structural components shall be constructed of minimum 16-gauge marine alloy aluminum, bolted to a rigid aluminum support structure.

2. The motors shall be mounted on a minimum 14-gauge steel power assembly, isolated from the unit structure with rubber vibration isolators.

3. Units shall bear an engraved aluminum nameplate and shall be shipped in ISTA Certified Transit Tested Packaging.

D. Propellers.

1. Propellers shall be cast aluminum airfoil design with cast aluminum hub.

2. The blade pitch shall be factory set and locked using set screws and roll pins.

3. The hub shall be keyed and locked to the shaft utilizing two set screws or a taper lock bushing.

4. Propellers shall be balanced in accordance with AMCA Standard 204-96, Balance Quality and Vibration Levels for Fans.

E. Motors. Motors shall be heavy duty type with permanently lubricated sealed bearings and furnished at the specified voltage, phase and enclosure.

F. Product. Fans shall be 24-inch, Type SPD as manufactured by Loren Cook Company.

PART 3 EXECUTION

3.01 EXAMINATION

A. Verify that openings for ventilating equipment have been constructed as indicated on the drawings and as required for the equipment.

3.02 PREPARATION

A. Obtain and provide information for and locate all necessary openings for the ventilating items occurring in building walls or in other areas of the buildings where openings are required.

B. Provide and locate any necessary sleeves.

3.03 INSTALLATION

A. Project drawings indicate the extent and general arrangement of the ventilating system. The Contractor shall be responsible for installing the proposed system as indicated, without violation of applicable codes, standards, or specification requirements. Equipment arrangements submitted shall fit into the space indicated, and shall allow adequate and accepted clearances of entry, servicing and maintenance.

B. Install all equipment in accordance with shop drawings, manufacturer's written instructions and recommendations, as indicated on the drawings, and as directed by the Engineer.

C. All work shall be done in accordance with applicable portions of details of construction as indicated in SMACNA Standards, and in accordance with recognized industry practices to ensure that ventilating systems serve their intended functions.

D. Installers must examine areas and conditions under which ventilating systems and accessories are to be installed and notify the contractor in writing of conditions detrimental to proper completion of the work. Do not proceed with work until unsatisfactory conditions have been corrected in a manner acceptable to the installers and Engineer.

E. Coordination with other work shall be done as necessary to interface installation of work and accessories properly with other work.

3.04 QUALITY CONTROL

A. The completed ventilating systems shall be operated to demonstrate compliance with project requirements. Test for air leakage while systems are operating.

B. Repair or replace faulty accessories, as required, to obtain proper operation and leak proof performance.

END OF SECTION

SECTION 15145

PUMP STATION PLUMBING

PART 1 GENERAL

1.01 SECTION INCLUDES

A. Plumbing system for pump station, to include: pipe, fittings, valves, equipment, connections for piping systems, and appurtenant items.

B. Pipe supports and anchors.

C. Pipe work required to connect equipment described in other Sections; and to install and connect items furnished under this Section; as shown on the drawings and as described herein.

1.02 RELATED SECTIONS

A. Section 02510 - Water System.

B. Section 09900 - Paints and Coatings.

1.03 REFERENCES

A. ASME B16.1 - Cast Iron Pipe Flanges and Flanged Fittings; The American Society of Mechanical Engineers.

B. ASME B16.3 - Malleable Iron Threaded Fittings; The American Society of Mechanical Engineers.

C. ASME B16.18 - Cast Copper Alloy Solder Joint Pressure Fittings; The American Society of Mechanical Engineers.

D. ASME B16.22 - Wrought Copper and Copper Alloy Solder Joint Pressure Fittings; The American Society of Mechanical Engineers.

E. ASME B16.26 - Cast Copper Alloy Fittings for Flared Copper Tubes; The American Society of Mechanical Engineers.

F. ASME B31.9 - Building Services Piping; The American Society of Mechanical Engineers.

G. ASTM A 53 - Standard Specification for Pipe, Steel, Black and Hot-Dipped, Zinc-Coated, Welded and Seamless.

H. ASTM B 42 - Standard Specification for Seamless Copper Pipe, Standard Sizes.

I. ASTM B 88 - Standard Specification for Seamless Copper Water Tube.

J. ASTM D 1785 - Standard Specification for Poly (Vinyl Chloride) (PVC) Plastic Pipe, Schedules 40, 80, and 120.

K. ASTM D 2447 - Standard Specification for Polyethylene (PE) Plastic Pipe, Schedules 40 and 80, Based on Outside Diameter.

L. ASTM D 3034 - Standard Specification for Type PSM Poly (Vinyl Chloride) (PVC) Sewer Pipe and Fittings.

M. ASTM F 477 - Standard Specification for Elastomeric Seals (Gaskets) for Joining Plastic Pipe.

N. AWWA C105/A21.5 - Polyethylene Encasement for Ductile-Iron Pipe Systems; American Water Works Association.

O. MSS SP-58 - Pipe Hangers and Supports - Materials, Design and Manufacture; Manufacturers Standardization Society of the Valve and Fittings Industry, Inc.

P. MSS SP-80 - Bronze Gate, Globe, Angle and Check Valves; Manufacturers Standardization Society of the Valve and Fittings Industry, Inc.

Q. MSS SP-89 - Pipe Hangers and Supports - Fabrication and Installation Practices; Manufacturers Standardization Society of the Valve and Fittings Industry, Inc.

R. NFPA 54 - National Fuel Gas Code; National Fire Protection Association.

S. Use the latest edition of the above reference standards as of the date of the project.

1.04 SUBMITTALS

A. See Section 01300 - Administrative Requirements, for submittal procedures.

B. Product Data: Provide data on pipe materials, pipe fittings, valves, and accessories. Provide manufacturers catalog information. Indicate valve data and ratings.

C. Project Record Documents: Record actual locations of valves.

1.05 QUALITY ASSURANCE

A. Perform Work in accordance with State of Utah, standards.

1. Maintain one copy on project site.

B. Valves: Manufacturer's name and pressure rating marked on valve body.

C. Identify pipe with marking including size, ASTM material classification, ASTM specification, potable water certification, water pressure rating.

1.06 REGULATORY REQUIREMENTS

A. Plumbing Code Compliance. Comply with applicable portions of the latest Utah Plumbing Code and local codes pertaining to plumbing materials, construction, and installation of products.

B. ANSI Compliance. Comply with applicable American National Standards pertaining to products and installation of domestic water piping systems.

1.07 DELIVERY, STORAGE, AND PROTECTION

A. Receive, store, and handle products, materials and equipment, at the building site, in a manner which will prevent loss, deterioration and damage.

B. Accept valves and plumbing equipment on site in shipping containers with labeling in place. Inspect for damage.

C. Provide temporary protective coating on cast iron and steel valves.

D. Handle pipe and tubing carefully to prevent bending and end damage; and also, to avoid cracking and scoring finish.

E. Provide temporary end caps and closures on piping and fittings. Maintain in place until installation.

F. Provide end-cap thread protectors on exposed threads of threaded metal pipe.

G. Protect piping systems from entry of foreign materials by temporary covers, completing sections of the work, and isolating parts of completed system.

H. Schedule deliveries to minimize long-term storage at the project site.

I. Store pipe and tubing inside and protect from the weather. When necessary to store outdoors, elevate above grade and enclose with durable, watertight wrapping.

J. Deliver and store water piping products and equipment in factory-wrapped packages which properly protect products against weather, dirt and damage.

1.08 ENVIRONMENTAL REQUIREMENTS

A. Do not install underground piping when bedding is wet or frozen.

PART 2 PRODUCTS

2.01 STORM DRAIN PIPING

A. Reinforced Concrete Pipe: ASTM C 76, class III with wall type B; mesh reinforcement; inside nominal diameter as indicated; bell and spigot end joints.

B. PVC Pipe: ASTM D 3034 SDR 35.

1. Fittings: PVC.

2. Joints: Push-on, using ASTM F 477 elastomeric gaskets.

2.02 WATER PIPING

A. Ductile Iron Pipe and Fittings shall be of the size and class indicated on the drawings; and shall conform to the requirements of Section 02680.

B. Exposed pipe and fittings shall not be coated with coal tar pitch varnish; but shall be painted as specified in Section 09900.

C. Copper Tube: ASTM B 88, Type K.

1. Fittings: ASME B16.18, cast copper alloy or ASME B16.22, wrought copper and bronze.

2. Joints: ASTM B 32, alloy Sn95 solder.

D. Galvanized Steel Pipe: ASTM A120, Schedule 80, seamless or welded, with screwed ends.

1. Fittings shall be 150 lb. galvanized malleable iron banded type, with screwed ends.

2. Unions shall be galvanized railroad type with ground brass-to-iron seats.

2.03 PIPE HANGERS AND SUPPORTS

A. General. Provide all hangers, supports, clamps, guides, sleeves, inserts, anchors and other such devices required for hanging or supporting pipe, preserving alignment, prevention or control of movement, passage of pipe through walls and floors, or securing pipe in any manner. The required number, location and detail of such items may or may not be indicated on the drawings; but, in any case, such work shall be provided as work incidental to furnishing and installing any type of pipe, fittings and appurtenances, and no extra payment will be made for this work.

B. All piping shall be adequately supported or suspended in such manner as to prevent sagging, swaying, pocketing, displacement, and over-stressing of pipe, fittings or connections; and shall furthermore be installed and supported so that no pipe, fittings, valves or "specials" transfer load or strain to equipment of any kind.

C. Unless otherwise specified or indicated on the drawings or accepted data submittals, hangers and supports shall conform to requirements herein.

D. Plumbing Piping:

1. Conform to ASME B31.9.

2. Hangers for Pipe Sizes 1/2 Inch to 1-1/2 Inches: Malleable iron, adjustable swivel, split ring.

3. Hangers for Cold Pipe Sizes 2 Inches and Over: Carbon steel, adjustable, clevis.

4. Wall Support for Pipe Sizes to 3 Inches: Cast iron hook.

5. Vertical Support: Steel riser clamp.

6. Floor Support for Cold Pipe: Cast iron adjustable pipe saddle, lock nut, nipple, floor flange, and concrete pier or steel support.

7. Floor Support for Hot Pipe Sizes to 4 Inches: Cast iron adjustable pipe saddle, locknut, nipple, floor flange, and concrete pier or steel support.

8. Copper Pipe Support: Carbon steel ring, adjustable, copper plated.

9. Concrete supports shall be installed under tees, bends and valves wherever shown on the drawings. Concrete supports shall be neatly constructed and finished. No supports shall be made until all pipe is in its final position.

10. Concrete thrust blocks shall be used wherever shown on the drawings or where thrust is great enough, in the Engineer's opinion, to cause movement of the piping. Adjustable pipe supports may be used as kick blocks for pipe in open locations.

2.04 PIPE SLEEVE SEALS

A. Where piping penetrates outside walls, provide modular wall and casing link-type seals around pipe to make periphery of the penetration air and watertight. The seals shall be equal to the Thunder line Corporation "Link Seal".

2.05 GATE VALVES

A. Up to and Including 3 Inches:

1. Manufacturers:
   a. Powell.
   b. Substitutions: See Section 01600.

2. MSS SP-80, Class 125, bronze body, bronze trim, rising stem, handwheel, inside screw, solid wedge disc, solder ends.

B. 4 inch and above: conforming to requirements of Section 02680, with flanged or screwed ends as indicated on the drawings; and shall have handwheels and position indicators.

2.06 BUTTERFLY VALVES

A. Butterfly valves shall conform to requirements of Section 02680, with flanged ends as indicated on the drawings.

B. Manual Operators. Manual operators shall consist of totally enclosed worm gearing, with stops provided to prevent over-travel of valve disc. Operators shall provide sufficient torque capacity to seat, unseat and rigidly hold, in any intermediate position, the valve disc under operating conditions of valve. Operator shall have indicator assembly to indicate position of valve disc. Worm gears shall be bronze and worms shall be hardened steel, which operate in lubricated bath. Operators shall be located to provide easy access, shall have a handwheel with square operating nut, and shall be slow-closing.

2.07 PUMP CONTROL VALVES

A. Valves shall have cast iron bodies, with bronze pilot and trim; designed for installation on the discharge of booster pumps to eliminate pipe line surges caused by the starting and stopping of pumps. Valves shall be epoxy lined and coated.

B. Valves shall be hydraulically operated. Pumps will start against closed valves. When pumps are started, the solenoid control valves are energized and the valves begin to open slowly, gradually increasing line pressure to full pumping head. When pumps are signaled to shut-off, the solenoid control valves are de-energized and the valves begin to close slowly, gradually reducing flow while pumps continue to run. When valves are closed, limit switch assemblies, which serve as an electrical interlock between valves and pumps, releases pump starters and the pumps stop. Should a power failure occur, a built-in, lift-type, check valve closes the moment flow stops, preventing reverse flow regardless of solenoid or diaphragm assembly position.

C. Valves shall be Clayton Model 60G-19 Pump Control Valves, as manufactured by Cla-Val Company.

2.08 SURGE VALVES

A. Valves shall have cast iron bodies, with bronze pilot and trim; designed to protect pumps, plumbing, and appurtenant equipment from surges caused by power failures and other sudden stopping of pumps.

B. Valves will be used in conjunction with the pumping system to prevent surges caused by power failures. Valves shall be hydraulically operated with pilots that will cause the main valve to open on a low pressure wave or a high-pressure wave. The high-pressure pilot shall be set to open the main valve at a pre-set pressure above the normal operating pressure. The low-pressure pilot shall be set to open the main valve at a pre-set pressure below the normal operating pressure.

C. Valves shall be Clayton Model 52-03 Surge Anticipator Valves, as manufactured by Cla-Val Company.

2.09 COMBINATION AIR-VACUUM RELEASE VALVES

A. Valves shall be designed to release large quantities of air from the pipeline during time of filling, admit large quantities of air into the pipeline during time of draining, and release small accumulations of air during normal operation of the pipeline.

B. Valves shall be equal in quality to "Heavy-Duty Combination Air Release Valves", of the size indicated on the drawings and as manufactured by Valve and Primer Corp. (APCO); and shall meet the provisions of these specifications.

2.10 MISCELLANEOUS ITEMS

A. Flanged Coupling Adapters. The flanged coupling adapters shall be Rockwell Type 912 or Type 913, or acceptable equal, with anchor studs as recommended by the manufacturer; for connecting ductile iron pipe to the flanged valves, equipment and fittings.

B. Mechanical Couplings. The mechanical couplings shall be Dresser, Rockwell, or acceptable equal, for connecting the size and type of pipe shown on the drawings. Couplings exposed to soil shall be primed and coated with a 1/4-inch layer of coal tar or approved rust preventing wax compound.

C. Other Items. Other miscellaneous and appurtenant materials shall be furnished as required to complete each item of work.

PART 3 EXECUTION

3.01 EXAMINATION

A. Verify that excavations are to required grade, dry, and not over-excavated.

3.02 PREPARATION

A. Ream pipe and tube ends. Remove burrs. Bevel plain end ferrous pipe.

B. Remove scale and dirt, on inside and outside, before assembly.

C. Prepare piping connections to equipment with flanges, unions or couplings.

3.03 INSTALLATION

A. Install all pipe, valves, fittings and accessories as indicated on the drawings; in conformity with State and local plumbing codes and industry standards.

B. Install equipment as indicated on the drawings; in accordance with manufacturer's instructions.

C. Pipe shall be cut accurately to measurements taken at the job site and shall be worked into place without springing or forcing; properly clearing all doors and other openings. Excessive cutting or other weakening of the building structures to facilitate piping installation will not be permitted.

D. Provide non-conducting dielectric connections wherever jointing dissimilar metals.

E. Install piping to allow for expansion and contraction without stressing pipe, joints, or connected equipment.

F. Establish elevations of buried piping outside the building to ensure not less than 4 ft of cover of water lines.

G. Prepare exposed, unfinished pipe, fittings, supports, and accessories ready for finish painting. Refer to Section 09900.

H. Excavate in accordance with Sections 02312 and 02315 for work of this Section.

I. Install bell and spigot pipe with bell end upstream.

J. Install valves with stems upright or horizontal, not inverted.

K. Install water piping to ASME B31.9.

L. Sleeve pipes passing through partitions, walls and floors.

M. Inserts:

1. Provide inserts for placement in concrete formwork.

N. Pipe Hangers and Supports:

1. Install in accordance with ASME B31.9.

2. Support horizontal piping as indicated and according to manufacturer's recommendations.

3. Install hangers to provide minimum 1/2-inch space between finished covering and adjacent work.

4. Place hangers within 12 inches of each horizontal elbow.

5. Provide copper plated hangers and supports for copper piping.

6. Prime coat exposed steel hangers and supports. Refer to Section 09900. Hangers and supports located in crawl spaces, pipe shafts, and suspended ceiling spaces are not considered exposed.

3.04 APPLICATION

A. Install couplings downstream of valves and at equipment or apparatus connections.

B. Install brass male adapters each side of valves in copper piped system. Solder adapters to pipe.

C. Install gate valves for shut-off and to isolate equipment, part of systems, or vertical risers.

3.05 ERECTION TOLERANCES

A. Drainage Piping: Establish invert elevations within 1/2 inch vertically of location indicated and slope to drain at minimum of 1/4 inch per foot slope.

B. Water Piping: Slope at minimum of 1/32 inch per foot and arrange to drain at low points.

3.06 PAINTING

A. After installation of plumbing, all exposed piping shall be cleaned of dirt and grease and painted as specified in Section 09900.

3.07 PIPE SLEEVES

A. Pipes passing through masonry construction shall be fitted with sleeves. Each sleeve shall extend through the wall, and shall be cut flush with each surface, unless otherwise required. Sleeves shall be two pipe sizes larger in diameter than the passing pipe. Sleeves in bearing walls shall be made of steel pipe.

B. Sleeves in floors shall be steel; space between such floor sleeves and passing pipes shall be caulked with an acceptable graphite packing and a plastic and waterproof caulking compound; and floor sleeves shall extend one-inch above finished floors.

C. All sleeves shall be securely cemented in place.

3.08 TESTING

A. After the installation of the plumbing system is completed and at such time as the Engineer may direct, the Contractor shall conduct an operating test for acceptance of the work. The tests shall be performed in the presence of the Engineer, as specified in Section 02680.

END OF SECTION

SECTION 15810

DUCTS

PART 1 GENERAL

1.01 SECTION INCLUDES

A. Metal ductwork.

B. Buried ductwork.

C. Duct cleaning.

1.02 RELATED SECTIONS

A. Section 09900 - Paints and Coatings: Weld priming, weather resistant, paint or coating.

1.03 REFERENCES

A. ASTM A 36 - Standard Specification for Carbon Structural Steel.

B. ASTM A 366 - Standard Specification for Steel, Sheet, Carbon, Cold Rolled, Commercial Quality.

C. ASTM A 569 - Standard Specification for Commercial Steel, Sheet and Strip, Carbon (0.15 Maximum Percent), Hot-Rolled.

D. ASTM A 653 - Standard Specification for Steel Sheets, Zinc-Coated (Galvanized) or Zinc-Iron Alloy-Coated (Gal annealed) by the Hot Dip Process.

E. NFPA 90A - Standard for the Installation of Air Conditioning and Ventilating Systems; National Fire Protection Association.

F. NFPA 90B - Standard for the Installation of Warm Air Heating and Air Conditioning Systems; National Fire Protection Association.

G. NFPA 96 - Standard for Ventilation Control and Fire Protection of Commercial Cooking Operations; National Fire Protection Association.

H. SMACNA (LEAK) - HVAC Air Duct Leakage Test Manual; Sheet Metal and Air Conditioning Contractors' National Association.

I. SMACNA (DCS) - HVAC Duct Construction Standards - Metal and Flexible; Sheet Metal and Air Conditioning Contractors' National Association.

J. UL 181 - Standard for Factory-Made Air Ducts and Air Connectors; Underwriters Laboratories Inc.

K. Use the latest edition of the above reference standards as of the date of the project.

1.04 PERFORMANCE REQUIREMENTS

A. No variation of duct configuration or sizes permitted except by written permission. Size round ducts installed in place of rectangular ducts in accordance with ASHRAE table of equivalent rectangular and round ducts.

1.05 SUBMITTALS

A. See Section 01300 - Administrative Requirements, for submittal procedures.

B. Product Data: Provide data for duct materials.

C. Shop Drawings: Indicate duct fittings, particulars such as gages, sizes, welds, and configuration prior to start of work.

D. Test Reports: Indicate pressure tests performed. Include date, section tested, test pressure, and leakage rate, following SMACNA (LEAK) - HVAC Air Duct Leakage Test Manual.

E. Manufacturer's Installation Instructions: Indicate special procedures for glass fiber ducts.

F. Manufacturer's Certificate: Certify that installation of glass fiber ductwork meets or exceed specified requirements.

G. Project Record Documents: Record actual locations of ducts and duct fittings. Record changes in fitting location and type. Show additional fittings used.

1.06 QUALITY ASSURANCE

A. Manufacturer Qualifications: Company specializing in manufacturing the type of products specified in this section, with minimum three years of documented experience.

B. Installer Qualifications: Company specializing in performing the type of work specified in this section, with minimum five years of documented experience.

1.07 REGULATORY REQUIREMENTS

A. Construct ductwork to NFPA 90A standards.

1.08 ENVIRONMENTAL REQUIREMENTS

A. Do not install duct sealants when temperatures are less than those recommended by sealant manufacturers.

B. Maintain temperatures within acceptable range during and after installation of duct sealants.

PART 2 PRODUCTS

2.01 MATERIALS

A. Galvanized Steel Ducts: ASTM A 653/A 653M galvanized steel sheet, Forming Steel (FS) designation, with G60/Z180 zinc coating.

2.02 DUCTWORK FABRICATION

A. Fabricate and support in accordance with SMACNA HVAC Duct Construction Standards - Metal and Flexible, and as indicated. Provide duct material, gages, reinforcing, and sealing for operating pressures indicated.

B. Construct T's, bends, and elbows with radius of not less than 1-1/2 times width of duct on centerline. Where not possible and where rectangular elbows must be used, provide air foil turning vanes. Where acoustical lining is indicated, provide turning vanes of perforated metal with glass fiber insulation.

C. Increase duct sizes gradually, not exceeding 15 degrees divergence wherever possible; maximum 30 degrees divergence upstream of equipment and 45 degrees convergence downstream.

D. Fabricate continuously welded round and oval duct fittings two gages heavier than duct gages indicated in SMACNA Standard. Joints shall be minimum 4-inch cemented slip joint, brazed or electric welded. Prime coat welded joints.

E. Provide standard 45-degree lateral wye takeoffs unless otherwise indicated where 90-degree conical tee connections may be used.

F. Where ducts are connected to exterior wall louvers and duct outlet is smaller than louver frame, provide blank-out panels sealing louver area around duct. Use same material as duct, painted black on exterior side; seal to louver frame and duct.

2.03 MANUFACTURED METAL DUCTWORK AND FITTINGS

A. Manufacture in accordance with SMACNA HVAC Duct Construction Standards - Metal and Flexible, and as indicated. Provide duct material, gauges, reinforcing, and sealing for operating pressures indicated.

2.04 BURIED UNDERGROUND DUCTS

A. Buried ducts may be concrete encased sheet metal as indicated.

B. Fabricate metal ductwork in accordance with SMACNA HVAC Duct Construction Standards - Metal and Flexible, except as indicated. Fabricate using two gages heavier material than indicated for 2-inch WG pressure class.

PART 3 EXECUTION

3.01 INSTALLATION

A. Install in accordance with manufacturer's instructions.

B. Duct sizes indicated are inside clear dimensions. For lined ducts, maintain sizes inside lining.

C. Install and seal metal and flexible ducts in accordance with SMACNA HVAC Duct Construction Standards - Metal and Flexible.

D. Locate ducts with sufficient space around equipment to allow normal operating and maintenance activities.

E. Use crimp joints with or without bead for joining round duct sizes 8 inch and smaller with crimp in direction of air flow.

F. Use double nuts and lock washers on threaded rod supports.

G. Slope underground ducts to plenums or low pump out points at l:500. Provide access doors for inspection.

H. Paint buried metal ductwork without factory jacket with one coat and seams and joints with additional coat of asphalt base protective coating.

I. Encase buried metal ductwork in 3 inch minimum of concrete. Provide adequate tie-down points to prevent ducts from floating during concrete placement. Introduce no heat into ducts for 20 days following placement of concrete.

J. Tape joints of PVC coated metal ductwork with PVC tape.

K. Insulate buried supply duct runs over 70 feet long with 1-inch-thick insulation covered with plastic vapor barrier. Refer to Section 15086.

L. Connect terminal units to supply ducts directly or with one-foot maximum length of flexible duct. Do not use flexible duct to change direction.

M. Connect diffusers or light troffer boots to low pressure ducts directly or with 5 feet maximum length of flexible duct held in place with strap or clamp.

N. Connect flexible ducts to metal ducts with adhesive.

O. Set plenum doors 6 to 12 inches above floor. Arrange door swings so that fan static pressure holds door in closed position.

P. During construction provide temporary closures of metal or taped polyethylene on open ductwork to prevent construction dust from entering ductwork system.

Q. At exterior wall louvers, seal duct to louver frame and install blank-out panels.

3.02 CLEANING

A. Clean duct system and force air at high velocity through duct to remove accumulated dust. To obtain sufficient air, clean half the system at a time. Protect equipment which may be harmed by excessive dirt with temporary filters, or bypass during cleaning.

END OF SECTION

SECTION 15834

AXIAL FANS

PART 1 GENERAL

1.01 SECTION INCLUDES

A. Propeller fans.

B. Motors and drives.

C. Accessories.

1.02 RELATED SECTIONS

A. Section 16140 - Ventilating System: roof mounted exhaust fan.

B. Section 16155 - Equipment Wiring: Electrical characteristics and wiring connections.

1.03 REFERENCES

A. ABMA STD 9 - Load Ratings and Fatigue Life for Ball Bearings; American Bearing Manufacturers Association, Inc.

B. ABMA STD 11 - Load Ratings and Fatigue Life for Roller Bearings; American Bearing Manufacturers Association, Inc.

C. AMCA 99 - Standards Handbook; Air Movement and Control Association International, Inc.

D. AMCA 210 - Laboratory Methods of Testing Fans for Ratings; Air Movement and Control Association International, Inc.

E. AMCA 301 - Methods for Calculating Fan Sound Ratings from Laboratory Test Data; Air Movement and Control Association International, Inc.

F. NEMA MG 1 - Motors and Generators; National Electrical Manufacturers Association.

G. Use the latest edition of the above reference standards as of the date of the project.

1.04 SUBMITTALS

A. See Section 01300 - Administrative Requirements, for submittal procedures.

B. Product Data: Provide data on axial fans and accessories including fan curves with specified operating point clearly plotted, power, RPM, sound power levels for both fan inlet and outlet at rated capacity, and electrical characteristics and connection requirements. Fans shall bear the AMCA seal

C. Shop Drawings: Indicate assembly of axial fans and accessories including fan curves with specified operating point clearly plotted, sound power levels for both fan inlet and outlet at rated capacity, and electrical characteristics and connection requirements.

D. Test Reports: Indicate performance data for adjustable axial fan blades for at least five blade settings, including maximum.

E. Manufacturer's Instructions: Indicate installation instructions.

F. Maintenance Data: Include instructions for lubrication, motor and drive replacement, spare parts list, and wiring diagrams.

1.05 QUALITY ASSURANCE

A. Manufacturer Qualifications: Company specializing in manufacturing the type of products specified in this section, with minimum three years of documented experience.

B. Products Requiring Electrical Connection: Listed and classified by Underwriters Laboratories Inc. as suitable for the purpose specified and indicated.

1.06 DELIVERY, STORAGE, AND PROTECTION

A. Protect motors, shafts, and bearings from weather and construction dust.

1.07 ENVIRONMENTAL REQUIREMENTS

A. Do not operate fans for any purpose until ductwork is clean, filters are in place, bearings have been lubricated, and fan has been test run under observation.

PART 2 PRODUCTS

2.01 PROPELLER FANS

A. Fans to be roof mounted exhaust fans, as indicated on the drawings. See Section 15140 for details.

PART 3 EXECUTION

3.01 INSTALLATION

A. Install in accordance with shop drawings, manufacturer's written instructions and recommendations, and as directed by the Engineer.

B. Install in accordance with applicable portions of details of construction as indicated in SMACNA Standards, and in accordance with recognized industry practices to ensure that ventilating systems serve their intended functions.

C. Installers must examine areas and conditions under which fans and accessories are to be installed and notify the contractor in writing of conditions detrimental to proper completion of the work. Do not proceed with work until unsatisfactory conditions have been corrected in a manner acceptable to the installers and the City Engineer.

G. Coordination with other work shall be done as necessary to interface installation of work and accessories properly with other work.

3.02 QUALITY CONTROL

A. Fans shall be operated to demonstrate compliance with project requirements. Test for air leakage while systems are operating.

B. Repair or replace faulty equipment and accessories, as required, to obtain proper operation and leak-proof performance.

END OF SECTION