POWDER MOUNTAIN WATER & SEWER IMPROVEMENT DISTRICT

TOP OF MOUNTAIN WATER SYSTEM PROJECT

POW.019.21
MARCH 2022

SHEET INDEX

	COVER SHEET
G.101	INDEX AND LEGEND
G.102	GENERAL NOTES
C.101	EXISTING SITE PLAN
C.102	OVERALL IMPROVEMENTS
C.103	GRADING AND DRAINAGE PLAN
C.201	10" WATER SERVICE PLAN & PROFILE
C.202	10" WATER SERVICE PLAN & PROFILE
C.203	10" WATER SERVICE PLAN & PROFILE
C.204	8" WATER SERVICE PLAN &PROFILE
C.205	NORTH ACCESS ROAD PLAN & PROFILE
C.206	STORM WATER IMPROVEMENTS
C.207	DRAIN BOX PLAN & SECTION
D.101	DETAILS
D.102	DETAILS
D.103	DETAILS
D.104	DETAILS
D.105	DETAILS
P.101	PIPING PLAN
P.102	PIPING SECTIONS
P.103	PIPING DETAILS
S.101	EXISTING & PROPOSED BOOSTER STATION ELEVATION
S.102	PROPOSED BOOSTER STATION ELEVATION
S.103	FOOTING PLAN
S.104	FLOORING PLAN
S.105	ROOFING PLAN
S.106	EXISTING SECTION & PROPOSED SECTION VIEW
S.107	STRUCTURAL DETAILS
S.108	STRUCTURAL DETAILS
ER.101	EROSION CONTROL PLAN
ER.102	BMP DETAILS
ER.103	BMP DETAILS
ER.104	BMP DETAILS
ER.105	BMP DETAILS

LOCATED AT POWDER MOUNTAIN
WEBER COUNTY, UTAH

GILSON ENGINEERING
Consulting Engineers & Surveyors
12401 SOUTH 450 EAST BUILDING C, UNIT 2, DRAPER, UT 84020
PHONE: (801) 571-9414 FAX: (801) 571-9449

LICENSED PROFESSIONAL ENGINEER
03/31/22
No. 362118
Bradley S. Gilson
STATE OF UTAH

TOP OF MOUNTAIN WATER SYSTEM PROJECT
PWM.019.21

ABBREVIATIONS

ADJ	ADJUST
ADS	ADVANCE DRAINAGE SYSTEM
ARV	AIR RELEASE VALVE
BC	BAR AND CAP
BOW	BACK OF WALK
BVCE	BEGINNING VERTICAL CURVE ELEV.
BVCS	BEGINNING VERTICAL CURVE STATION
CB	CATCH BASIN
CBL	CABLE
CH	CHORD BEARING
CL	CENTERLINE
CMP	CORRUGATED METAL PIPE
CO	CLEAN OUT
CONC	CONCRETE
COR.	SECTION CORNER
D	DELTA ANGLE
DET	DETAIL
DIA	DIAMETER
DL	DRAINLINE
DIP	DUCTILE IRON PIPE
DWG	DRAWING
EG	EXISTING GRADE
ELEV	ELEVATION
EOC	EDGE OF CONCRETE
EP	EDGE OF PAVEMENT
EVCE	END VERTICAL CURVE ELEV.
EVCS	END VERTICAL CURVE STATION
EW	EACH WAY
EX	EXISTING
FFE	FINISHED FLOOR ELEVATION
FG	FINISHED GRADE
FH	FIRE HYDRANT
FL	FLOW LINE
FO	FIBER OPTICS
FT	FOOT
GB	GRADE BREAK
HC	HANDICAP
HDPE	HIGH DENSITY POLY ETHYLENE
HP	HIGH POINT
INV.	INVERT
IRR	IRRIGATION
L.F.	LINEAR FEET
LIP	LIP OF CURB
LP	LOW POINT
LT.	LEFT
MAX.	MAXIMUM
MH	MANHOLE
MIN.	MINIMUM
MON	MONUMENT
NTS	NOT TO SCALE
OC	ON CENTER
OHP	OVER HEAD POWER
P	POWER
PC	POINT OF CURVE
PI	POINT OF INTERSECTION
PL	PROPERTY LINE
PP	POWER POLE
PRC	POINT OF REVERSE CURVE
PRV	PRESSURE REDUCING VALVE
PT	POINT OF TANGENCY
PUE	PUBLIC UTILITY EASEMENT
PVC	POLYVINYL CHLORIDE PIPE
R	RADIUS
ROW	RIGHT OF WAY
RT.	RIGHT
S	SANITARY SEWER
SD	STORM DRAIN
SER	SOUTH END RADIUS
SSMH	SEWER MANHOLE
STA	STATION
STD	STANDARD
SW	SECONDARY WATER
TBC	TOP BACK OF CURB
TOA	TOP OF ASPHALT
TOE	TOE OF SLOPE
TOP	TOP OF SLOPE
TOW	TOP OF WALL
TYP	TYPICAL
UG	UNDER GROUND POWER
VPC	VERTICAL POINT OF CURVE
VPI	VERTICAL POINT OF INTERSECTION
VPT	VERTICAL POINT OF TANGENCY
W	WATER
WM	WATER METER
WV	WATER VALVE

IDENTIFICATION SYSTEM

SEE DETAIL 5-C.1

TYPICAL DETAIL CALL OUT

DIRECTION OF VIEW — SECTION NUMBER — 1 / C.13 — *DRAWING SECTION IS REFERENCE TO

TYPICAL SECTION CUT

DESCRIPTION — DETAIL NUMBER — DETAIL — SCALE: N.T.S. — 1 / C-1 — SCALE — *DRAWING DETAIL IS REFERENCED TO

TYPICAL DETAIL IDENTIFICATION

DESCRIPTION — SECTION NUMBER — SECTION — SCALE: N.T.S. — 1 / C-1 — SCALE — *DRAWING WHICH SECTION IS TAKEN

TYPICAL SECTION IDENTIFICATION

*NOTE: IF DETAIL OR SECTION IS REFERENCED TO MULTIPLE SHEETS THE SHEET NUMBER WILL INDICATE 'VARIES'

LEGEND AND SYMBOLS

- SECTION CORNER & LINE (FOUND)
- BOUNDARY/PHASE LINE
- ADJACENT PL or LOT LINES
- RIGHT-OF-WAY LINE
- CENTERLINE of ROAD
- EASEMENT LINE
- CURB & GUTTER
- = EDGE OF ASPHALT
- FENCE
- DAYLIGHT- CUT
- DAYLIGHT- FILL
- PROPOSED INTERMEDIATE CONTOUR (4475)
- PROPOSED INDEX CONTOUR
- EXISTING INDEX CONTOUR
- EXISTING INTERMEDIATE CONTOUR
- DRAINAGE / DITCH CENTERLINE
- SANITARY SEWER MANHOLE & PIPE
- STORM DRAIN CLEAN OUT & PIPE
- CATCH BASIN
- 4' COMBO BOX
- 4' INLET
- CULINARY WATER LINE & MANHOLE
- WATER VALVE
- = PROPOSED FIRE HYDRANT
- WATER METER
- SECONDARY WATER & STOP AND WASTE
- IRRIGATION BOX
- IRRIGATION VALVE
- POWER LINES & MANHOLE
- ELECTRIC METER
- UTIL-POLE
- ELECTRIC BOX
- POWERPOLE
- GUY WIRE
- TRAFFIC CONTROL BOX
- TRAFFIC SIGNAL
- GAS LINE & MANHOLE
- GAS-VALVE
- TELEPHONE LINE & MANHOLE
- TELEPHONE POLE
- TELEPHONE RISER
- TELEPHONE BOX
- CABLE BOX
- CABLE TELEVISION LINE & MANHOLE
- FIBER OPTIC LINE & MARKER
- STREET LIGHT
- STREET SIGN
- TEST PIT
- WELL
- MAIL BOX
- SEWER TAG
- SD-TAG
- SPOT ELEVATION (4400.00 TBC)
- = PROPOSED ASPHALT
- = PROPOSED CONCRETE
- EXISTING ELEVATION / PROPOSED ELEVATION (4400 / 4442)
- DRAIN LINE
- POWERLINE
- STORM DRAIN LINE
- EXISTING STORM DRAIN LINE
- SANITARY SEWER LINE
- WATERLINE
- FUTURE WATERLINE

*NOTE: ALL EXISTING FEATURES WILL BE IN A SHADED LINE

LOCATION MAP

GILSON ENGINEERING
Consulting Engineers & Surveyors
12401 SOUTH 450 EAST BUILDING C, UNIT 2, DRAPER, UT 84020
PHONE: (801) 571-9414 FAX: (801) 571-9449

LICENSED PROFESSIONAL ENGINEER
03/18/2022
No. 362118
Bradley S. Gilson
STATE OF UTAH

POWDER MOUNTAIN WATER AND SEWER IMPROVEMENT DISTRICT

REV.	DATE	BY	COMMENTS

REVISIONS

1" SCALE MEASURES 1" ON FULL SIZE SHEET
ADJUST FOR HALF SIZE SHEETS

DATE: FEBRUARY 2022
DRAWING NAME: G.101 INDEX AND LEGEND
DESIGNED/DRAWN BY: JM/BP
CHECKED: ---
APPROVED: ---

INDEX AND LEGEND

TOP OF MOUNTAIN WATER SYSTEM
POWDER MOUNTAIN WATER & SEWER IMPROVEMENT DISTRICT
WEBER COUNTY, UTAH

REVISION: A

PROJ. # POW.019

G.101

GENERAL NOTES

1. THIS DESIGN IS AN ORIGINAL UNPUBLISHED WORK AND MAY NOT BE DUPLICATED, PUBLISHED AND/OR USED WITHOUT THE WRITTEN CONSENT OF GILSON ENGINEERING, INC.

2. THESE SHEETS - LISTED BY DRAWING INDEX, ALL ACCOMPANYING SPECIFICATIONS FOR MATERIALS, WORKMANSHIP QUALITY, AND NOTES HAVE BEEN PREPARED SOLELY FOR THE CONSTRUCTION AND FINISH OF PROJECT IMPROVEMENTS, COMPLETE AND READY FOR USE.

3. ALL WORK IS TO BE PERFORMED IN ACCORDANCE WITH PERTINENT JURISDICTIONAL CODES, RESTRICTIONS, COVENANTS, AND/OR ORDINANCES. ANY CONFLICT BETWEEN DESIGN AND REQUIREMENT SHALL BE REPORTED TO GILSON ENGINEERING, INC. BEFORE PROCEEDING. FAILURE TO DO SO VOIDS THE DESIGN.

4. ANY AND ALL PROPOSED CHANGE, MODIFICATIONS AND/OR SUBSTITUTION SHALL BE REPORTED TO GILSON ENGINEERING, INC. BEFORE PROCEEDING. ANY DEVIATION FROM THE CONTRACT DOCUMENTS, WITHOUT THE EXPRESS WRITTEN AUTHORIZATION OF GILSON ENGINEERING, INC. VOIDS THE DESIGN.

5. IN THE EVENT OF CONFLICT BETWEEN THE DESIGN DOCUMENTS AND/OR JURISDICTIONAL REQUIREMENTS, THE MORE RESTRICTIVE FROM THE STANDPOINT OF SAFETY AND PHYSICAL SECURITY SHALL APPLY.

6. ANY INSTALLATION OR WORK NECESSARY TO THE FUNCTIONING, SAFETY AND/OR PHYSICAL SECURITY OF DESIGN THAT IS TO BE ENCAPSULATED OR OTHERWISE PERMANENTLY OBSCURED FROM INSPECTION SHALL BE REPORTED TO GILSON ENGINEERING, INC. A MINIMUM OF TWO (2) WORKING DAYS BEFORE ENCLOSURE.

7. DESIGN IS GENERALLY PREDICATED UPON PROVISIONS OF THE CURRENT EDITION OF THE INTERNATIONAL BUILDING CODE AND/OR AMENDMENTS AS MAY HAVE BEEN LOCALLY ENACTED. THIS DESIGN AND ANY CONSEQUENT CONSTRUCTION SHALL ACCOMMODATE ALL REQUIREMENTS OF THE JURISDICTIONAL FIRE SAFETY/PREVENTION DISTRICT.

8. ANY DAMAGE, DISRUPTION OR COMPROMISE OF AMBIENT RIGHTS-OF-WAY, UTILITIES, OR ENVIRONMENTAL QUALITY SHALL BE IMMEDIATELY RECTIFIED BY THE CONTRACTOR TO THE SATISFACTION OF GILSON ENGINEERING, INC. AT NO COST TO THE OWNER.

9. THIS DESIGN PURPORTS TO PERMIT FULL ACCESS TO HANDICAPPED PERSONS AS PROVIDED FOR BY PROVISIONS OF FEDERAL LAW. ANY DEVIATION OR COMPROMISE SHALL BE REPORTED TO GILSON ENGINEERING, INC. FOR RESOLUTION.

10. ALL WORK SHALL BE INSPECTED BY GOVERNING AGENCIES IN ACCORDANCE WITH THEIR REQUIREMENTS. JURISDICTIONAL APPROVAL SHALL BE SECURED BEFORE PROCEEDING WITH WORK

UTILITY NOTES

1. COORDINATE ALL UTILITY CONNECTIONS WITH PLUMBING PLANS, SITE PLAN AND CONTRACTOR.

2. VERIFY DEPTH AND LOCATION OF ALL EXISTING UTILITIES PRIOR TO CONSTRUCTING ANY NEW UTILITY LINES. NOTIFY CIVIL ENGINEER OF ANY DISCREPANCIES OR CONFLICTS PRIOR TO ANY CONNECTIONS BEING MADE.

3. WATER LINES, VALVES, FIRE HYDRANTS, FITTINGS ETC. ARE TO BE CONSTRUCTED PER PLUMBING PLANS AND SITE PLAN (BY OTHERS). CONTRACTOR IS RESPONSIBLE TO CONSTRUCT ANY VERTICAL ADJUSTMENTS NECESSARY TO CLEAR SEWER, STORM DRAIN OR OTHER UTILITIES AS NECESSARY INCLUDING VALVE BOXES AND HYDRANT SPOOLS TO PROPER GRADE.

EROSION CONTROL NOTES

1. AT ALL TIMES DURING CONSTRUCTION, THE CONTRACTOR SHALL BE RESPONSIBLE FOR PREVENTING AND CONTROLLING EROSION DUE TO WIND AND RUNOFF. THE CONTRACTOR SHALL ALSO BE RESPONSIBLE FOR MAINTAINING THE EROSION CONTROL FACILITIES SHOWN ON THE PLAN.

2. CONTRACTOR SHALL BE RESPONSIBLE FOR CLEANING DRAINAGE AND EROSION CONTROL FACILITIES AS REQUIRED. STREETS SHALL BE KEPT CLEAN OF DEBRIS FROM TRAFFIC FROM THE SITE.

3. CONTRACTOR SHALL USE VEHICLE TRACKING CONTROL AT ALL LOCATIONS WHERE VEHICLES WILL ENTER OR EXIT THE SITE. CONTROL FACILITIES WILL BE MAINTAINED WHILE CONSTRUCTION IS IN PROGRESS, MOVED WHEN NECESSARY, AND REMOVED WHEN THE SITE IS PAVED.

4. INLET PROTECTION DEVICES SHALL BE INSTALLED IMMEDIATELY UPON INDIVIDUAL INLETS BECOMING FUNCTIONAL.

5. ALL WASH WATER (CONCRETE TRUCKS, VEHICLE CLEANING, ETC.) SHALL BE DISPOSED IN A MANNER THAT PREVENTS CONTACT WITH STORM WATER DISCHARGES FROM THE SITE.

6. FUGITIVE DUST AREAS SHALL BE CONTROLLED BY SPRAYING WATER ON THE DRY AREAS OF THE SITE.

7. NO RUBBISH, TRASH, GARBAGE OR OTHER SUCH MATERIALS SHALL BE DISCHARGED INTO DRAINAGE DITCHES OR WATERS OF THE STATE.

8. ALL MATERIALS SPILLED, DROPPED, WASHED OR TRACKED FROM VEHICLES ONTO ROADWAYS OR INTO STORM DRAINS MUST BE REMOVED IMMEDIATELY.

9. THE CONTRACTOR SHALL BE RESPONSIBLE FOR ADJUSTING THE EROSION CONTROL MEASURES (SILT FENCES, STRAW BALES, ETC.) DUE TO GRADE CHANGES OR OTHER UNFORESEEN CONDITIONS DURING DEVELOPMENT OF THE PROJECT.

CONSTRUCTION NOTES

1. ALL WORK WITHIN THE SITE TO CONFORM TO THE CURRENT DISTRICT STANDARDS AND SPECIFICATIONS.

2. THE CONTRACTOR SHALL BE RESPONSIBLE FOR MEETING ALL OF THE REQUIREMENTS ESTABLISHED FOR SAFE TRENCHING. (SEE OSHA AND UOSHA REQUIREMENTS, LATEST EDITIONS).

3. CONTRACTOR SHALL LOCATE ALL UNDERGROUND UTILITIES BEFORE LAYING PIPE WITHIN 200 FEET OF SAID UTILITIES WHICH MAY BE EXPOSED, DAMAGED OR CROSSED AS SHOWN ON THE DRAWINGS OR AS "BLUE STAKED". THE CONTRACTOR WILL MAKE ARRANGEMENTS WITH THE UTILITY COMPANY TO MOVE THE UTILITY IF NECESSARY OR OBTAIN PERMISSION FROM THE PROJECT ENGINEER TO MODIFY GRADES OF PROJECT LINES IN ORDER TO GO AROUND EXISTING UTILITIES.

4. SEWER MAINS, WATER MAINS, GAS MAINS AND OTHER UTILITIES ARE NOT SHOWN ON THE TANK DETAIL PLANS. REFER TO SITE/UTILITY PLANS (BY OTHERS). THE CONTRACTOR SHALL DETERMINE THE ACTUAL LOCATION OF EXISTING SERVICE CONNECTIONS AND UTILITIES, VERIFY THE HORIZONTAL AND VERTICAL LOCATIONS AND TAKE THE NECESSARY STEPS TO AVOID THEM.

5. SPECIFIC INFORMATION PROVIDED IN THE CONTRACT DOCUMENTS SHALL SUPERSEDE ITEMS COVERED IN THESE DRAWINGS.

6. ALL ELECTRICAL WORK SHALL BE COMPLETED SEPARATELY BY OTHERS. CONTRACTOR FOR THIS PROJECT SHALL COORDINATE WITH ELECTRICAL CONTRACTOR.

7. CONTRACTOR SHALL MAINTAIN UNRESTRICTED ACCESS TO POWDER MOUNTAIN RESORT PARKING LOT AND FACILITIES. IN THE CASE WHERE CONSTRUCTION ACTIVITIES REQUIRE TEMPORARY ADJUSTMENT TO MAINTAIN ACCESS, CONTRACTOR SHALL GIVE TWO WEEKS NOTICE (MINIMUM) AND OBTAIN APPROVAL OF THE PLAN FROM DISTRICT AND POWDER MOUNTAIN RESORT STAFF.

CALL BEFORE YOU DIG.
IT'S FREE &
IT'S THE LAW.
(TOLL-FREE)
1-800-662-4111
208-2100
(SALT LAKE METRO)

205 WEST 700 SOUTH, SUITE 101
SALT LAKE CITY, UTAH 84101

CAUTION NOTICE TO CONTRACTOR

THE CONTRACTOR IS SPECIFICALLY CAUTIONED THAT THE LOCATION AND/OR ELEVATION OF EXISTING UTILITIES AS SHOWN ON THESE PLANS ARE BASED ON RECORDS OF THE VARIOUS UTILITY COMPANIES AND, WHERE POSSIBLE, MEASUREMENTS TAKEN IN THE FIELD. THE INFORMATION IS NOT TO BE RELIED ON AS BEING EXACT OR COMPLETE. THE CONTRACTOR MUST CALL THE APPROPRIATE UTILITY COMPANY AT LEAST 48 HOURS BEFORE ANY EXCAVATION TO REQUEST EXACT FIELD LOCATION OF UTILITIES. IT SHALL BE THE RESPONSIBILITY OF THE CONTRACTOR TO RELOCATE ALL EXISTING UTILITIES WHICH CONFLICT WITH THE PROPOSED IMPROVEMENTS SHOWN ON THE PLANS.

THE CONTRACTOR AGREES THAT HE SHALL ASSUME SOLE AND COMPLETE RESPONSIBILITY FOR JOB SITE CONDITIONS DURING THE COURSE OF CONSTRUCTION OF THIS PROJECT, INCLUDING SAFETY OF ALL PERSONS AND PROPERTY: THAT THIS REQUIREMENT SHALL APPLY CONTINUOUSLY AND NOT BE LIMITED TO THE NORMAL WORKING HOURS; AND THE CONTRACTOR SHALL DEFEND, INDEMNIFY, AND HOLD THE OWNER AND THE ENGINEER HARMLESS FROM ANY AND ALL LIABILITY, REAL OR ALLEGED, IN CONNECTION WITH THE PERFORMANCE OF WORK ON THIS PROJECT, EXCEPTING FOR LIABILITY ARISING FROM SOLE NEGLIGENCE OF THE OWNER OR THE ENGINEER.

GILSON ENGINEERING
Consulting Engineers & Surveyors
12401 SOUTH 450 EAST BUILDING C, UNIT 2, DRAPER, UT 84020
PHONE: (801) 571-9414 FAX: (801) 571-9449

LICENSED PROFESSIONAL ENGINEER
03/18/2022
No. 362118
Bradley S. Gilson
STATE OF UTAH

POWDER MOUNTAIN WATER AND SEWER IMPROVEMENT DISTRICT

REV/ DATE	BY	COMMENTS

REVISIONS

1" SCALE MEASURES 1" ON FULL SIZE SHEET
ADJUST FOR HALF SIZE SHEETS

DATE: FEBRUARY 2022
DRAWING NAME: GENERAL NOTES
DESIGNED/DRAWN BY: JM/BP
CHECKED: ---
APPROVED: ---

GENERAL NOTES

TOP OF MOUNTAIN WATER SYSTEM
POWDER MOUNTAIN WATER & SEWER IMPROVEMENT DISTRICT
WEBER COUNTY, UTAH

REVISION: A

PROJ. # POW.019

G.102

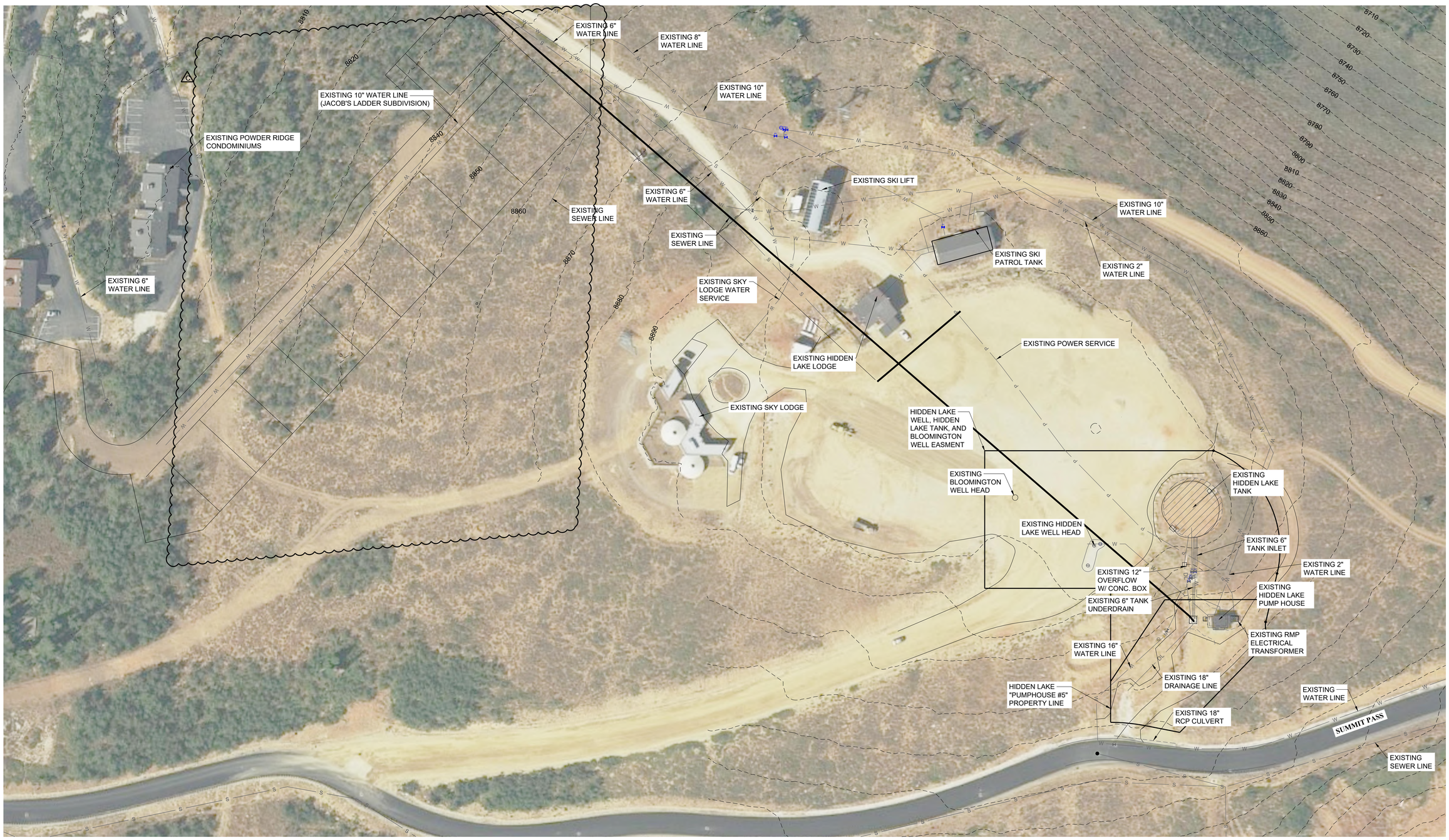

60 0 60 120
SCALE IN FEET

N

DISCLAIMER NOTE

UTILITY LOCATIONS SHOWN HEREON ARE APPROXIMATE ONLY. IT SHALL BE THE CONTRACTOR'S RESPONSIBILITY TO DETERMINE THE EXACT HORIZONTAL AND VERTICAL LOCATION OF ALL EXISTING UNDERGROUND AND OVERHEAD UTILITIES PRIOR TO COMMENCING CONSTRUCTION. NO REPRESENTATION IS MADE THAT ALL EXISTING UTILITIES ARE SHOWN HEREON. THE ENGINEER ASSUMES NO RESPONSIBILITY FOR UTILITIES NOT SHOWN OR UTILITIES NOT SHOWN IN THEIR PROPER LOCATION.

GILSON ENGINEERING
Civil Engineers & Surveyors
12401 SOUTH 450 EAST BUILDING C, UNIT 3, DRAPER, UT 84020
PHONE: (801) 571-9414 FAX: (801) 571-9449

LICENSED PROFESSIONAL ENGINEER
3/18/22
No. 362118
Bradley S. Gilson
STATE OF UTAH

POWDER MOUNTAIN WATER AND SEWER IMPROVEMENT DISTRICT

REV	DATE	BY	COMMENTS
B	03/31/22	BP	EX. WATER CONNECTION SHIFT AND EX. PARCELS

REVISIONS

1" SCALE MEASURES 1" ON FULL SIZE SHEET
ADJUST FOR HALF SIZE SHEETS

DATE: FEBRUARY 2022
DRAWING NAME:
DESIGNED/DRAWN BY: JM/BP
CHECKED:
APPROVED:

EXISTING SITE PLAN

TOP OF MOUNTAIN WATER SYSTEM
POWDER MOUNTAIN WATER & SEWER IMPROVEMENT DISTRICT
WEBER COUNTY, UTAH

REVISION: B

PROJ. # POW.019

C.101

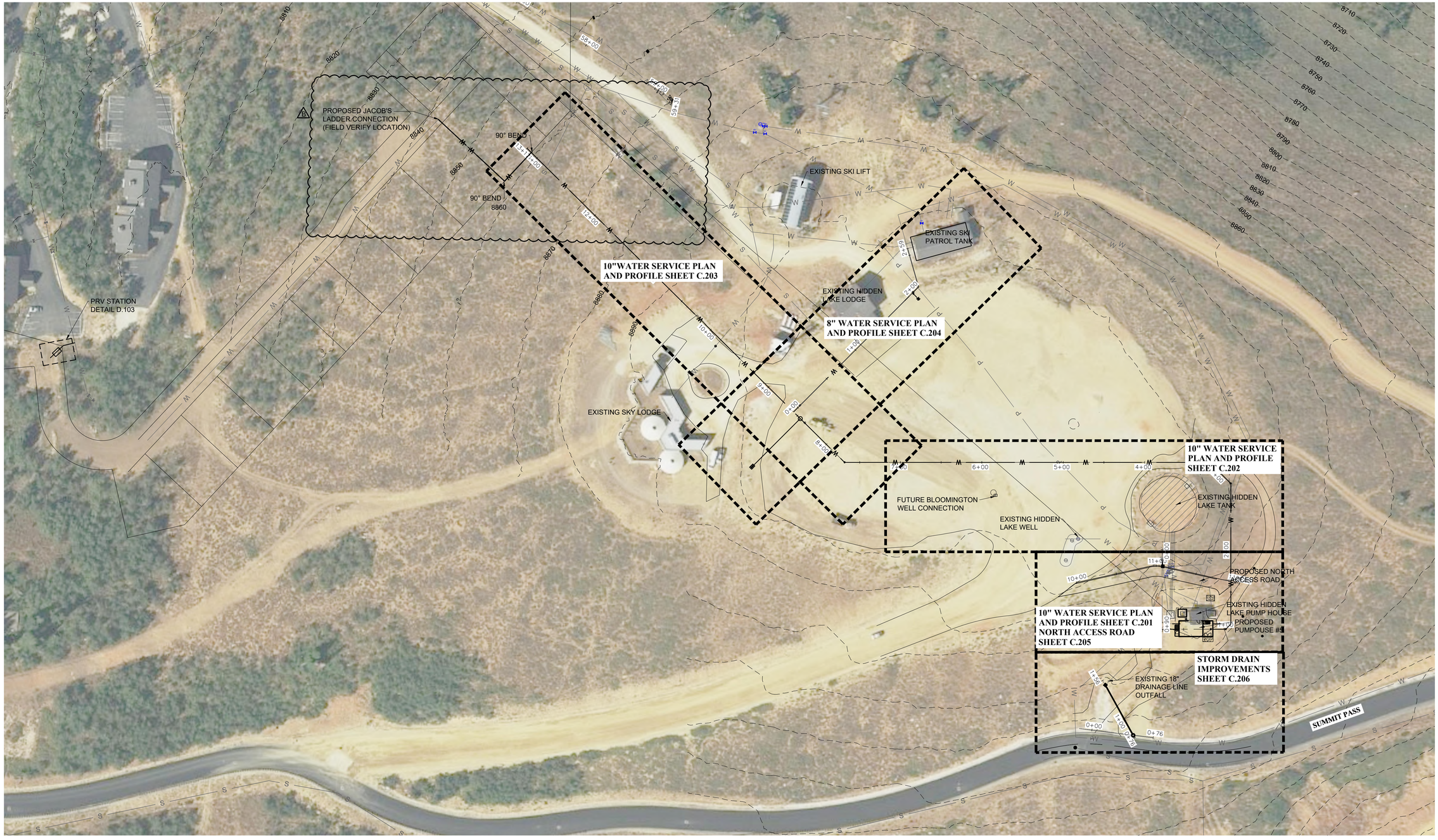

NOTE:

1. CONSTRUCT ALL IMPROVEMENTS PER PMWSID STANDARD DRAWINGS.

DISCLAIMER NOTE

UTILITY LOCATIONS SHOWN HEREON ARE APPROXIMATE ONLY. IT SHALL BE THE CONTRACTOR'S RESPONSIBILITY TO DETERMINE THE EXACT HORIZONTAL AND VERTICAL LOCATION OF ALL EXISTING UNDERGROUND AND OVERHEAD UTILITIES PRIOR TO COMMENCING CONSTRUCTION. NO REPRESENTATION IS MADE THAT ALL EXISTING UTILITIES ARE SHOWN HEREON. THE ENGINEER ASSUMES NO RESPONSIBILITY FOR UTILITIES NOT SHOWN OR UTILITIES NOT SHOWN IN THEIR PROPER LOCATION.

GILSON ENGINEERING
Consulting Engineers & Surveyors
12401 SOUTH 450 EAST BUILDING C, UNIT 2, DRAPER, UT 84020
PHONE: (801) 571-3414 FAX: (801) 571-3449

LICENSED PROFESSIONAL ENGINEER
3/31/22
No. 362118
Bradley S. Gilson
STATE OF UTAH

POWDER MOUNTAIN WATER AND SEWER IMPROVEMENT DISTRICT

REVISIONS

REV	DATE	BY	COMMENTS
B	03/31/22	BP	10" HDPE CONNECTION

1" SCALE MEASURES 1" ON FULL SIZE SHEET
ADJUST FOR HALF SIZE SHEETS

DATE: FEBRUARY 2022
DRAWING NAME:
DESIGNED/DRAWN BY: JM/BP
CHECKED:
APPROVED:

OVERALL IMPROVEMENTS

TOP OF MOUNTAIN WATER SYSTEM
POWDER MOUNTAIN WATER & SEWER IMPROVEMENT DISTRICT
WEBER COUNTY, UTAH

REVISION: B

PROJ. # POW.019

C.102

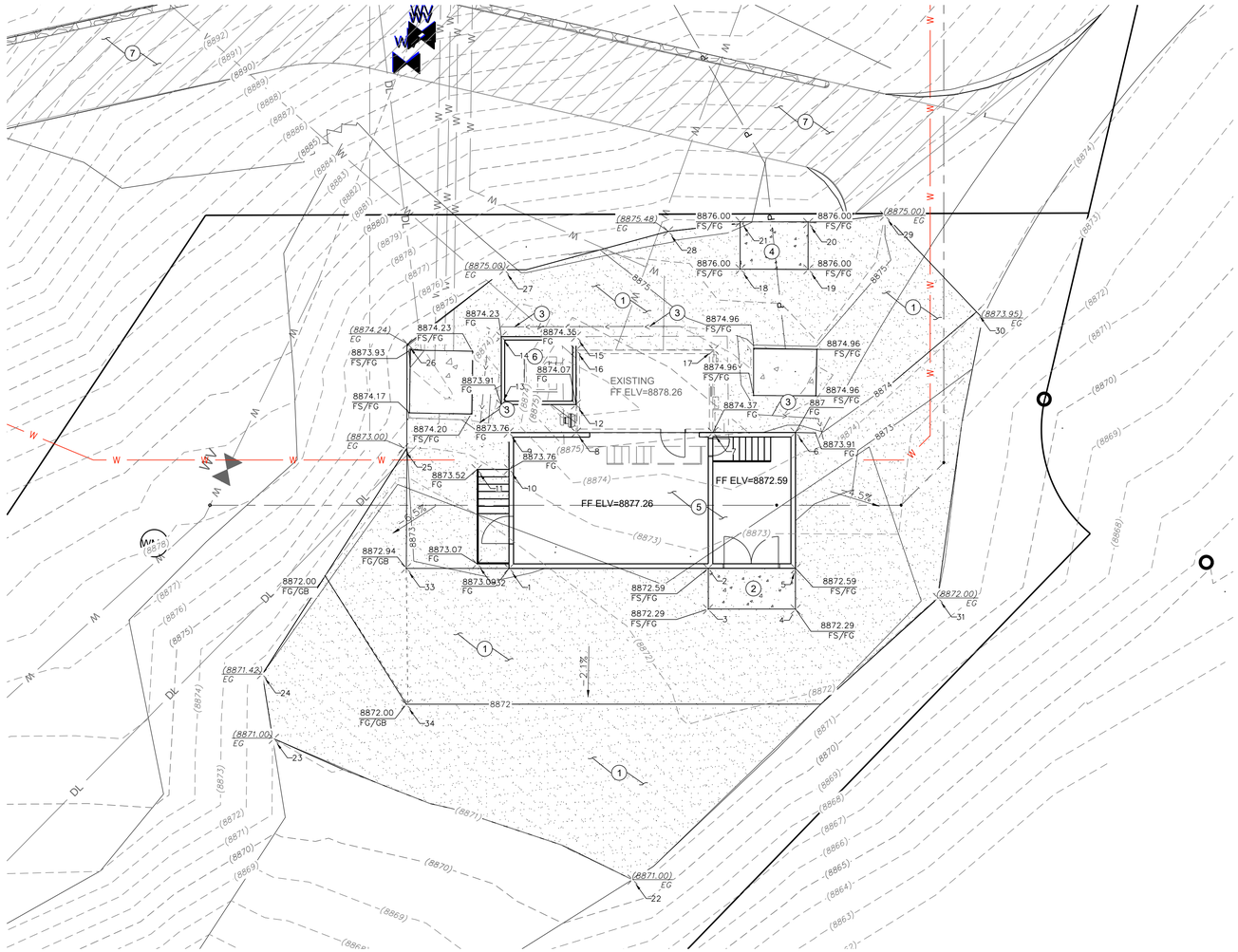

GRADING GENERAL NOTES

SITE GRADING SHALL BE PERFORMED IN ACCORDANCE WITH THESE PLANS AND SPECIFICATIONS. THE CONTRACTOR SHALL BE RESPONSIBLE FOR REMOVING AND REPLACING ALL SOFT, YIELDING, OR UNSUITABLE MATERIAL AND REPLACING THEM WITH SUITABLE MATERIALS AS SPECIFIED IN THE GEOTECHNICAL REPORT. ALL EXCAVATED OR FILLED AREAS SHALL BE COMPACTED TO 95% OF MODIFIED PROCTOR MAXIMUM DENSITY PER ASTM TEST D-1557 EXCEPT UNDER BUILDING FOUNDATIONS WHERE IT SHALL BE 95% MINIMUM OF MAXIMUM DENSITY. MOISTURE CONTENT AT TIME OF PLACEMENT SHALL NOT EXCEED 2% ABOVE NOR 3% BELOW OPTIMUM. CONTRACTOR SHALL SUBMIT COMPACTION REPORT AS PREPARED BY A QUALIFIED REGISTERED GEOTECHNICAL ENGINEER, VERIFYING THAT ALL FILLED AREAS AND SUBGRADE AREA WITHIN THE BUILDING PAD AREA AND AREAS TO BE PAVED HAVE BEEN COMPACTED IN ACCORDANCE WITH THESE PLANS.

CONTRACTOR TO BECOME FAMILIAR WITH SOIL CONDITIONS

THE CONTRACTOR IS TO USE BEST MANAGEMENT PRACTICES FOR PROVIDING EROSION CONTROL AND DUST SUPPRESSION FROM CONSTRUCTION OF THIS PROJECT.

ALL SURFACE IMPROVEMENTS DISTURBED BY CONSTRUCTION SHALL BE RESTORED OR REPLACED. INCLUDING TREES, DECORATIVE SHRUBS, SOD, FENCES, WALLS AND STRUCTURES, WHETHER OR NOT THEY ARE SPECIFICALLY SHOWN ON THE CONTRACT DOCUMENTS.

N

10 0 10 20

SCALE IN FEET

CONSTRUCTION KEY NOTES

1. INSTALL GENERAL FILL TYPE 1
2. INSTALL 6" THICK GENERATOR RAMP, 6" THICK CONCRETE OVER PROPERLY PREPARED GENERAL FILL TYPE 1
3. CONSTRUCT V-DITCH
4. ELECTRICAL VAULT BY OTHERS
5. PUMP HOUSE #5, SEE STRUCTURAL SHEETS FOR DETAILS
6. PROPOSED PUMP TO WASTE ENCLOSURE, SEE STRUCTURAL SHEETS FOR DETAILS
7. PROPOSED NORTH ACCESS ROAD, SEE SHEET C.205

GENERAL FILL TYPE 1

Point Table

Point #	Northing	Easting
1	3658114.79	1568212.57
2	3658114.76	1568241.86
3	3658108.78	1568241.86
4	3658108.76	1568254.76
5	3658114.76	1568254.76
6	3658134.80	1568254.73
7	3658134.80	1568242.57
8	3658134.80	1568222.44
9	3658134.79	1568212.52
10	3658129.38	1568212.57
11	3658129.34	1568207.84
12	3658138.92	1568222.43
13	3658138.92	1568211.43
14	3658148.92	1568211.43
15	3658148.92	1568222.44

Point Table

Point #	Northing	Easting
16	3658146.92	1568222.43
17	3658146.98	1568242.72
18	3658158.85	1568246.63
19	3658158.82	1568256.63
20	3658165.66	1568256.60
21	3658165.82	1568246.63
22	3658068.97	1568230.76
23	3658089.69	1568177.93
24	3658099.23	1568176.21
25	3658132.49	1568197.04
26	3658147.86	1568197.63
27	3658158.75	1568211.88
28	3658164.42	1568235.99
29	3658166.73	1568267.90
30	3658152.58	1568281.39

Point Table

Point #	Northing	Easting
31	3658110.44	1568275.70
32	3658115.46	1568207.87
33	3658114.83	1568197.41
34	3658094.75	1568197.42

LEGEND AND ABBREVIATIONS

TC = TOP OF CURB
AC = ASPHALT AND CONCRETE
BSW = BACK OF SIDEWALK
FF = FINISH FLOOR
FL = FLOW LINE
FS = FINISH SURFACE
GB = GRADE BREAK
HP = HIGH POINT
EG = EXISTING GRADE
LP = LOW POINT
GR = STORM INLET GRATE
BS = BOTTOM OF STAIRS
TS = TOP OF STAIRS
MATCH = MATCH EXISTING
FG = FINISH GRADE

X.XX% — DIRECTION OF FLOW & SLOPE
(XX.XX) AC — EXISTING GRADE
XX.XX TC — PROPOSED GRADE
XXXX — EXISTING CONTOUR
RIGHT-OF-WAY/PROPERTY LINE
CENTERLINE
EXISTING CURB, GUTTER & SIDEWALK
EXISTING STRUCTURE

DISCLAIMER NOTE

UTILITY LOCATIONS SHOWN HEREON ARE APPROXIMATE ONLY. IT SHALL BE THE CONTRACTOR'S RESPONSIBILITY TO DETERMINE THE EXACT HORIZONTAL AND VERTICAL LOCATION OF ALL EXISTING UNDERGROUND AND OVERHEAD UTILITIES PRIOR TO COMMENCING CONSTRUCTION. NO REPRESENTATION IS MADE THAT ALL EXISTING UTILITIES ARE SHOWN HEREON. THE ENGINEER ASSUMES NO RESPONSIBILITY FOR UTILITIES NOT SHOWN OR UTILITIES NOT SHOWN IN THEIR PROPER LOCATION.

GILSON ENGINEERING
Consulting Engineers & Surveyors
12401 SOUTH 450 EAST BUILDING C, UNIT 2, DRAPER, UT 84020
PHONE: (801) 571-9414 FAX: (801) 571-9449

LICENSED PROFESSIONAL ENGINEER
03/18/2022
No. 362118
Bradley S. Gilson
STATE OF UTAH

POWDER MOUNTAIN WATER AND SEWER IMPROVEMENT DISTRICT

REV DATE	BY	COMMENTS

REVISIONS

1" SCALE MEASURES 1" ON FULL SIZE SHEET
ADJUST FOR HALF SIZE SHEETS

DATE: FEBRUARY 2022
DRAWING NAME:
DESIGNED/DRAWN BY: JM/BP
CHECKED: ---
APPROVED: ---

PROPOSED GRADING & DRAINAGE

TOP OF MOUNTAIN WATER SYSTEM
POWDER MOUNTAIN WATER & SEWER IMPROVEMENT DISTRICT
WEBER COUNTY, UTAH

REVISION: A

PROJ. # POW.019

C.103

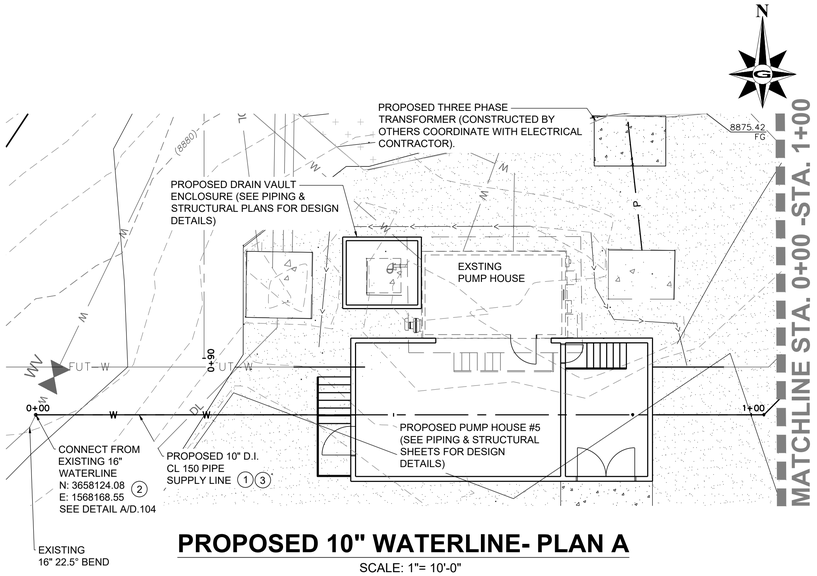

PROPOSED 10" WATERLINE- PLAN A

SCALE: 1"= 10'-0"

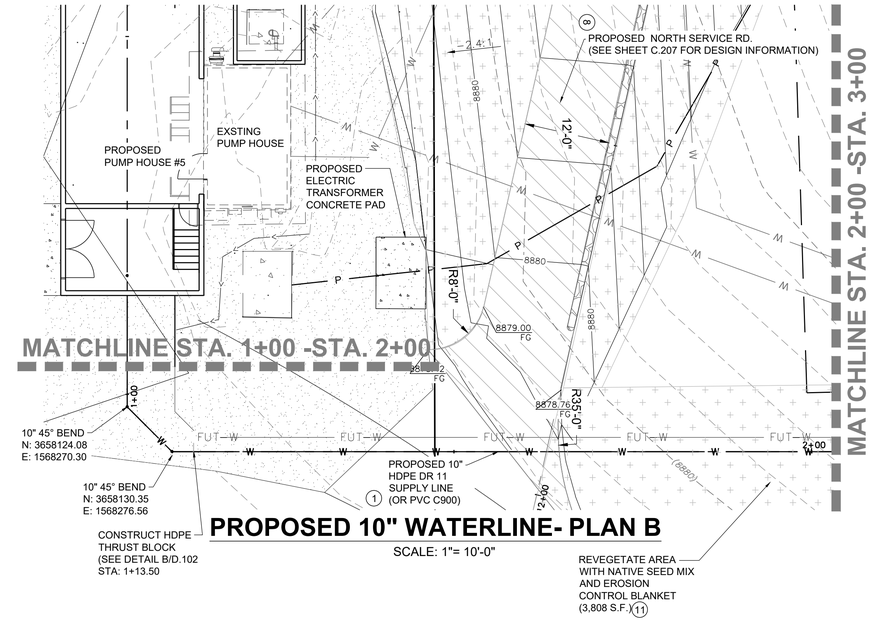

PROPOSED 10" WATERLINE- PLAN B

SCALE: 1"= 10'-0"

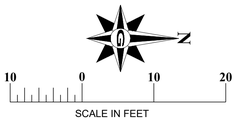

CONSTRUCTION NOTES

1. PROPOSED WATER LINES TO BE INSTALLED AT A MINIMUM OF 9' DEEP IN PARKING AREAS AND ROADWAYS, AND 7' DEEP IN ALL OTHER AREAS
2. CONTRACTOR SHALL POTHOLE EXISTING LINE PRIOR TO ORDERING PARTS TO VERIFY PIPE LOCATION, TYPE & SIZE.
3. DOUBLE POLYWRAP ALL DUCTILE IRON D.I. PIPE.
4. CONSTRUCT AIR VAC DETAIL A SHEET D.101
5. CONSTRUCT FIRE HYDRANT ASSEMBLY PER DETAIL C SHEET D.104
6. CONSTRUCT 8"ø HDPE DR11 PIPE (PIPE SUPPLIED BY OWNER)
7. ADJUST TO GRADE
8. INSTALL 12' WIDE ACCESS ROAD PER DETAIL 2 SHEET D.103
9. CONSTRUCT 4'x4' INLET WITH GRATE PER DETAIL 6 SHEET D.105
10. INSTALL 18"ø RCP
11. ALL UNIMPROVED AREAS DISTURBED DURING CONSTRUCTION SHALL BE RE-VEGETATED WITH NATIVE SEED MIX. INSTALL AN EROSION CONTROL BLANKET, #AEC-SEGRN4 (OR EQUAL) FOR AREAS WITH SLOPES OVER 10%
12. INSTALL 1" WATER METER PER DETAIL SHEET D.101

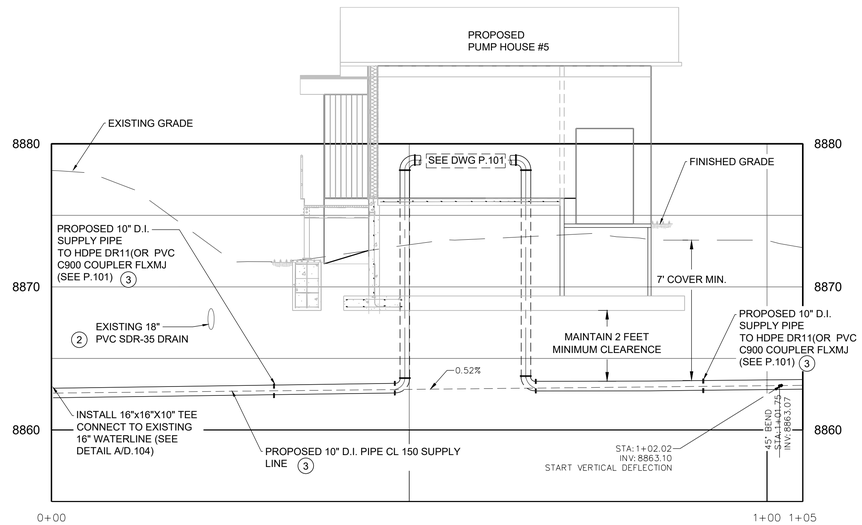

PROFILE A

SCALE: HOR: 1"= 10'-0"
VER: 1"= 5'-0"

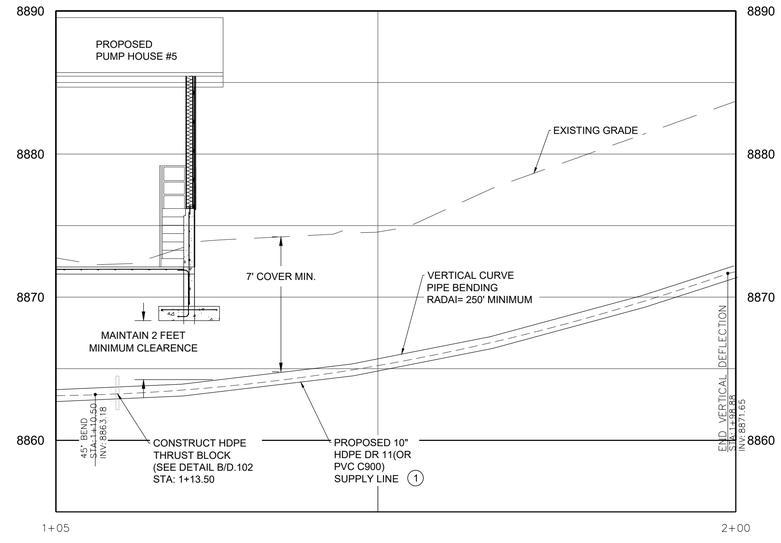

PROFILE B

SCALE: HOR: 1"= 10'-0"
VER: 1"= 5'-0"

DISCLAIMER NOTE

UTILITY LOCATIONS SHOWN HEREON ARE APPROXIMATE ONLY. IT SHALL BE THE CONTRACTOR'S RESPONSIBILITY TO DETERMINE THE EXACT HORIZONTAL AND VERTICAL LOCATION OF ALL EXISTING UNDERGROUND AND OVERHEAD UTILITIES PRIOR TO COMMENCING CONSTRUCTION. NO REPRESENTATION IS MADE THAT ALL EXISTING UTILITIES ARE SHOWN HEREON. THE ENGINEER ASSUMES NO RESPONSIBILITY FOR UTILITIES NOT SHOWN OR UTILITIES NOT SHOWN IN THEIR PROPER LOCATION.

GILSON ENGINEERING
Consulting Engineers & Surveyors
12401 SOUTH 450 EAST, BUILDING C, UNIT 2, DRAPER, UT 84020
PHONE: (801) 571-9414 FAX: (801) 571-9449

LICENSED PROFESSIONAL ENGINEER
03/18/2022
No. 362118
Bradley S. Gilson
STATE OF UTAH

POWDER MOUNTAIN WATER AND SEWER IMPROVEMENT DISTRICT

REV DATE	BY	COMMENTS

REVISIONS

1" SCALE MEASURES 1" ON FULL SIZE SHEET
ADJUST FOR HALF SIZE SHEETS

DATE: FEBRUARY 2022
DRAWING NAME:
DESIGNED/DRAWN BY: JM/BP
CHECKED: ---
APPROVED: ---

10" WATER SERVICE PLAN AND PROFILE

TOP OF MOUNTAIN WATER SYSTEM
POWDER MOUNTAIN WATER & SEWER IMPROVEMENT DISTRICT
WEBER COUNTY, UTAH

REVISION: A

PROJ. # POW.019

C.201

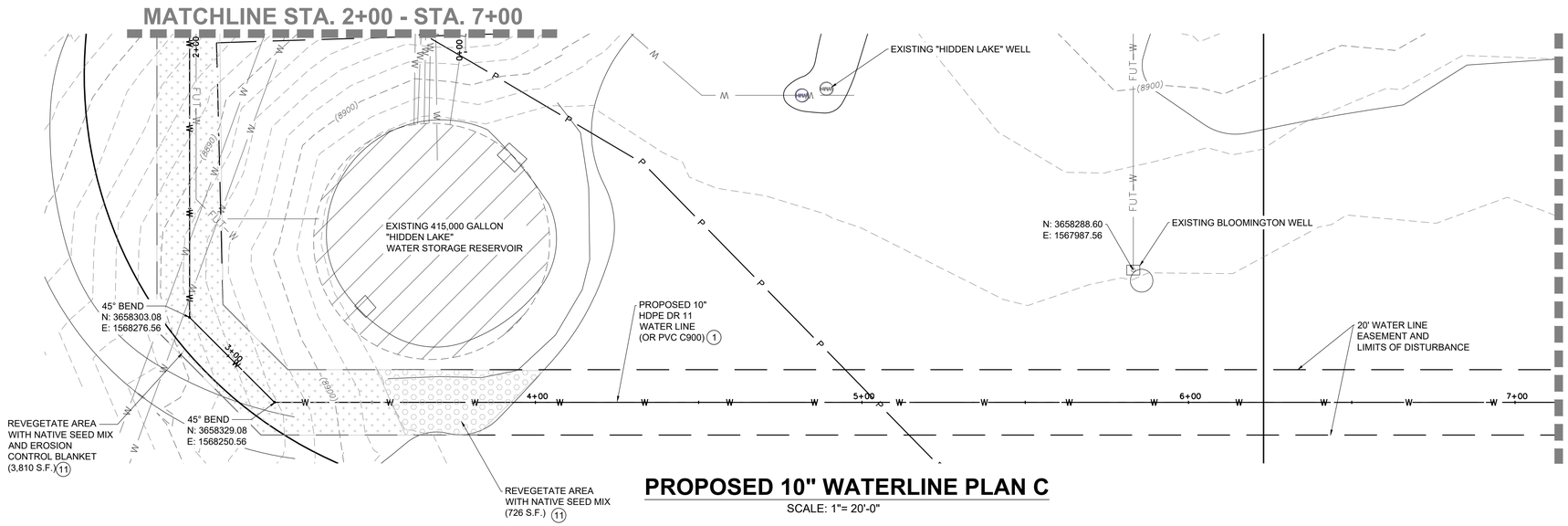

PROPOSED 10" WATERLINE PLAN C

SCALE: 1"= 20'-0"

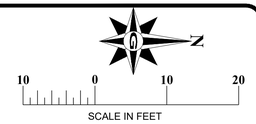

CONSTRUCTION NOTES

1. PROPOSED WATER LINES TO BE INSTALLED AT A MINIMUM OF 9' DEEP IN PARKING AREAS AND ROADWAYS, AND 7' DEEP IN ALL OTHER AREAS
2. CONTRACTOR SHALL POTHOLE EXISTING LINE PRIOR TO ORDERING PARTS TO VERIFY PIPE LOCATION, TYPE & SIZE.
3. DOUBLE POLYWRAP ALL DUCTILE IRON D.I. PIPE.
4. CONSTRUCT AIR VAC DETAIL A SHEET D.101
5. CONSTRUCT FIRE HYDRANT ASSEMBLY PER DETAIL C SHEET D.104
6. CONSTRUCT 8"ø HDPE DR11 PIPE (PIPE SUPPLIED BY OWNER)
7. ADJUST TO GRADE
8. INSTALL 12' WIDE ACCESS ROAD PER DETAIL 2 SHEET D.103
9. CONSTRUCT 4'X4' INLET WITH GRATE PER DETAIL 6 SHEET D.105
10. INSTALL 18"ø RCP
11. ALL UNIMPROVED AREAS DISTURBED DURING CONSTRUCTION SHALL BE RE-VEGETATED WITH NATIVE SEED MIX. INSTALL AN EROSION CONTROL BLANKET, #AEC-SEGRN4 (OR EQUAL) FOR AREAS WITH SLOPES OVER 10%
12. INSTALL 1" WATER METER PER DETAIL SHEET D.101

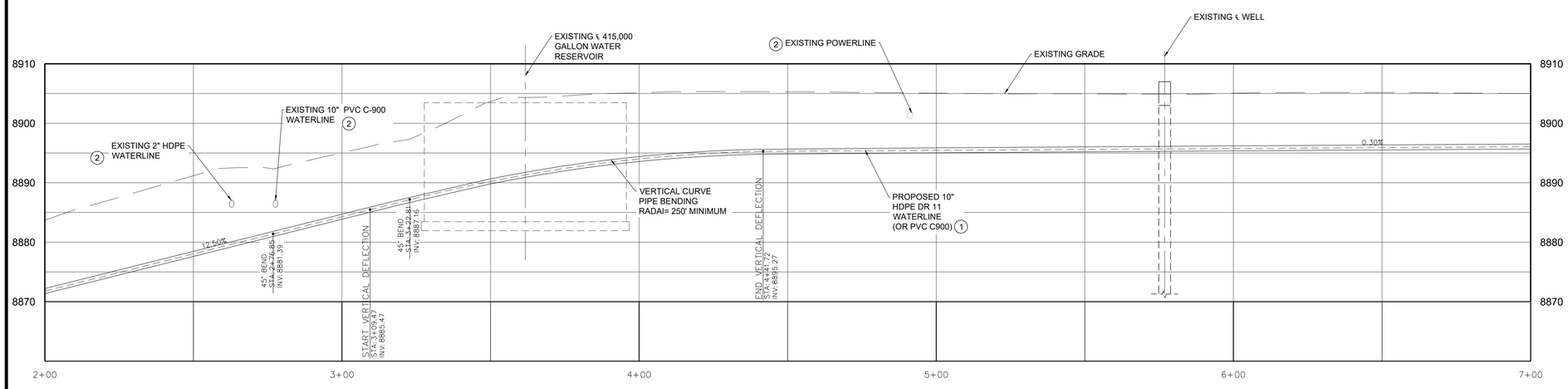

PROFILE C

SCALE: HOR: 1"= 20'-0"
VER: 1"= 10'-0"

DISCLAIMER NOTE

UTILITY LOCATIONS SHOWN HEREON ARE APPROXIMATE ONLY. IT SHALL BE THE CONTRACTOR'S RESPONSIBILITY TO DETERMINE THE EXACT HORIZONTAL AND VERTICAL LOCATION OF ALL EXISTING UNDERGROUND AND OVERHEAD UTILITIES PRIOR TO COMMENCING CONSTRUCTION. NO REPRESENTATION IS MADE THAT ALL EXISTING UTILITIES ARE SHOWN HEREON. THE ENGINEER ASSUMES NO RESPONSIBILITY FOR UTILITIES NOT SHOWN OR UTILITIES NOT SHOWN IN THEIR PROPER LOCATION.

GILSON ENGINEERING
Consulting Engineers & Surveyors
12401 SOUTH 450 EAST, BUILDING C, UNIT 2, DRAPER, UT 84020
PHONE: (801) 571-9414 FAX: (801) 571-9449

LICENSED PROFESSIONAL ENGINEER
03/18/2022
No. 362118
Bradley S. Gilson
STATE OF UTAH

POWDER MOUNTAIN WATER & SEWER IMPROVEMENT DISTRICT

REV DATE	BY	COMMENTS

REVISIONS

1" SCALE MEASURES 1" ON FULL SIZE SHEET
ADJUST FOR HALF SIZE SHEETS

DATE: FEBRUARY 2022
DRAWING NAME:
DESIGNED/DRAWN BY: JM/BP
CHECKED: ---
APPROVED: ---

10" WATER SERVICE PLAN AND PROFILE

TOP OF MOUNTAIN WATER SYSTEM
POWDER MOUNTAIN WATER & SEWER IMPROVEMENT DISTRICT
WEBER COUNTY, UTAH

REVISION: A
PROJ. # POW.019

C.202

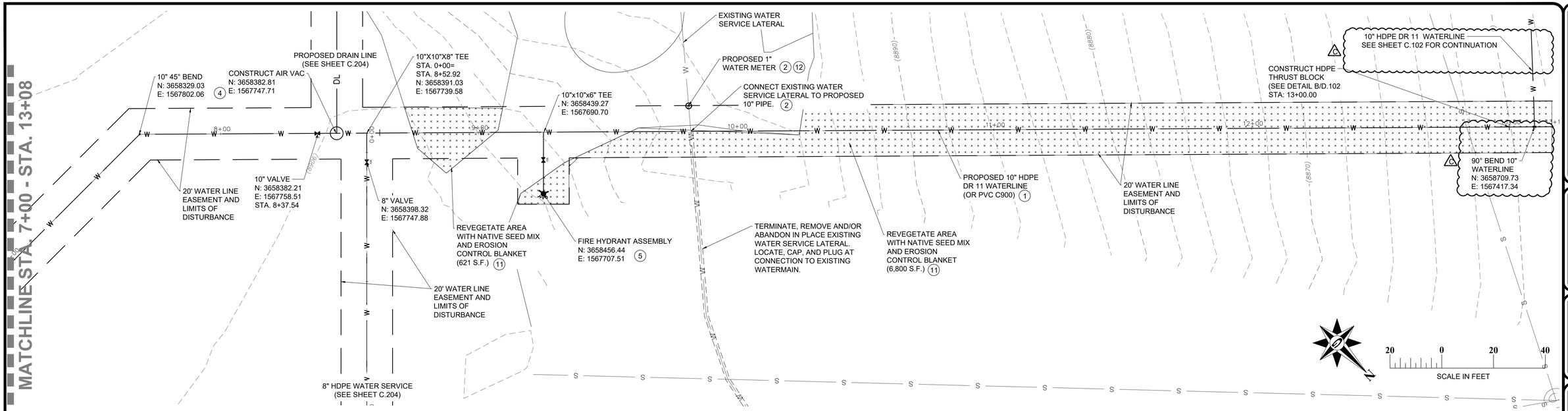

PROPOSED 10" WATERLINE PLAN D

SCALE: 1"= 20'-0"

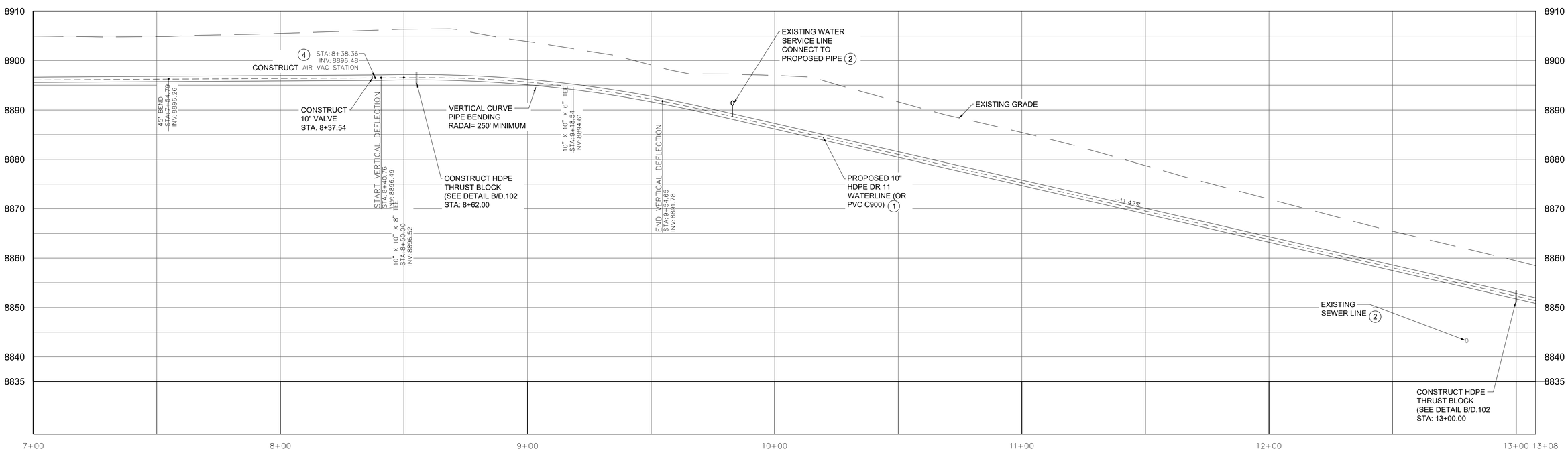

PROFILE D

SCALE: HOR: 1"= 20'-0"
VER: 1"= 10'-0"

CONSTRUCTION NOTES

1. PROPOSED WATER LINES TO BE INSTALLED AT A MINIMUM OF 9' DEEP IN PARKING AREAS AND ROADWAYS, AND 7' DEEP IN ALL OTHER AREAS
2. CONTRACTOR SHALL POTHOLE EXISTING LINE PRIOR TO ORDERING PARTS TO VERIFY PIPE LOCATION, TYPE & SIZE.
3. DOUBLE POLYWRAP ALL DUCTILE IRON D.I. PIPE.
4. CONSTRUCT AIR VAC DETAIL A SHEET D.101
5. CONSTRUCT FIRE HYDRANT ASSEMBLY PER DETAIL C SHEET D.104
6. CONSTRUCT 8"ø HDPE DR11 PIPE (PIPE SUPPLIED BY OWNER)
7. ADJUST TO GRADE
8. INSTALL 12' WIDE ACCESS ROAD PER DETAIL 2 SHEET D.103
9. CONSTRUCT 4'X4' INLET WITH GRATE PER DETAIL 6 SHEET D.105
10. INSTALL 18"ø RCP
11. ALL UNIMPROVED AREAS DISTURBED DURING CONSTRUCTION SHALL BE RE-VEGETATED WITH NATIVE SEED MIX. INSTALL AN EROSION CONTROL BLANKET, #AEC-SEGRN4 (OR EQUAL) FOR AREAS WITH SLOPES OVER 10%
12. INSTALL 1" WATER METER PER DETAIL SHEET D.101

DISCLAIMER NOTE

UTILITY LOCATIONS SHOWN HEREON ARE APPROXIMATE ONLY. IT SHALL BE THE CONTRACTOR'S RESPONSIBILITY TO DETERMINE THE EXACT HORIZONTAL AND VERTICAL LOCATION OF ALL EXISTING UNDERGROUND AND OVERHEAD UTILITIES PRIOR TO COMMENCING CONSTRUCTION. NO REPRESENTATION IS MADE THAT ALL EXISTING UTILITIES ARE SHOWN HEREON. THE ENGINEER ASSUMES NO RESPONSIBILITY FOR UTILITIES NOT SHOWN OR UTILITIES NOT SHOWN IN THEIR PROPER LOCATION.

GILSON ENGINEERING
Civil Engineers & Surveyors
12401 SOUTH 450 EAST BUILDING C, SUITE 1, DRAPER, UT 84020
PHONE: (801) 571-9414 FAX: (801) 571-9449

LICENSED PROFESSIONAL ENGINEER
3/31/22
No. 362118
Bradley S. Gilson
STATE OF UTAH

POWDER MOUNTAIN WATER AND SEWER IMPROVEMENT DISTRICT

REV	DATE	BY	COMMENTS
B	03/31/22	BP	10" HDPE CONNECTION

REVISIONS

1" SCALE MEASURES 1" ON FULL SIZE SHEET
ADJUST FOR HALF SIZE SHEETS

DATE: FEBRUARY 2022
DRAWING NAME:
DESIGNED/DRAWN BY: JM/BP
CHECKED: ---
APPROVED: ---

10" WATER SERVICE PLAN AND PROFILE

TOP OF MOUNTAIN WATER SYSTEM
POWDER MOUNTAIN WATER & SEWER IMPROVEMENT DISTRICT
WEBER COUNTY, UTAH

REVISION: B
PROJ. # POW.019

C.203

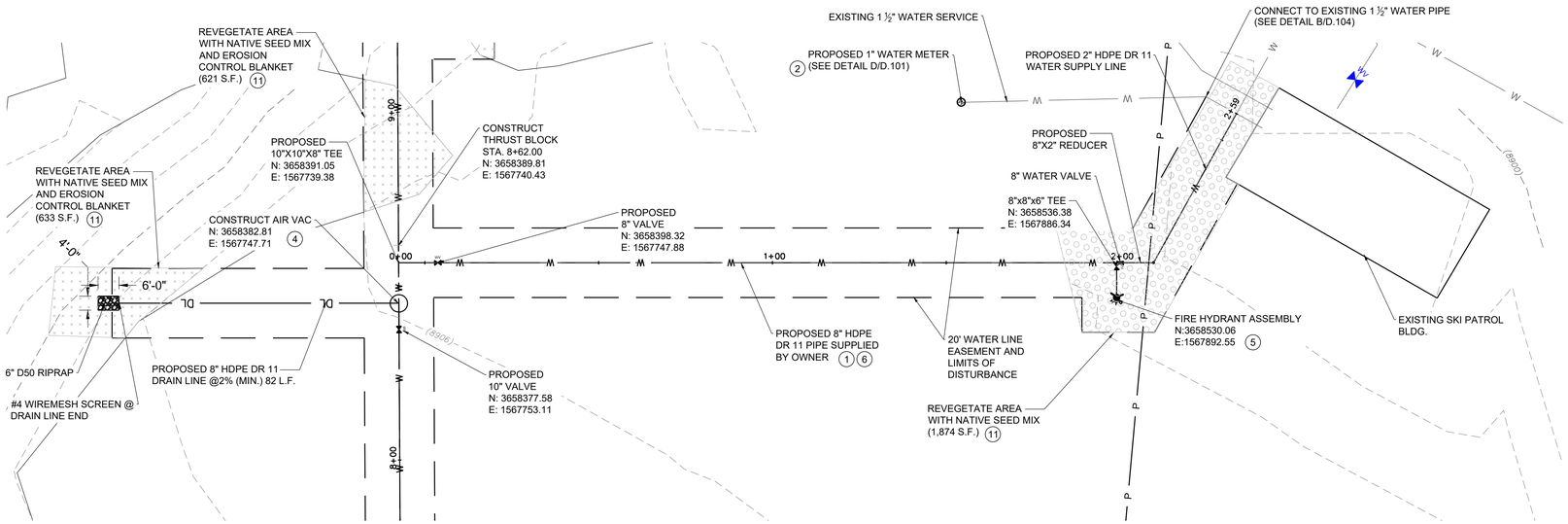

PROPOSED 8" WATERLINE CONNECTION FROM MAINLINE TO SKI PATROL LODGE

SCALE: 1"= 20'-0"

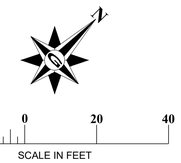

CONSTRUCTION NOTES

1. PROPOSED WATER LINES TO BE INSTALLED AT A MINIMUM OF 9' DEEP IN PARKING AREAS AND ROADWAYS, AND 7' DEEP IN ALL OTHER AREAS
2. CONTRACTOR SHALL POTHOLE EXISTING LINE PRIOR TO ORDERING PARTS TO VERIFY PIPE LOCATION, TYPE & SIZE.
3. DOUBLE POLYWRAP ALL DUCTILE IRON D.I. PIPE.
4. CONSTRUCT AIR VAC DETAIL A SHEET D.101
5. CONSTRUCT FIRE HYDRANT ASSEMBLY PER DETAIL C SHEET D.104
6. CONSTRUCT 8"ø HDPE DR11 PIPE (PIPE SUPPLIED BY OWNER)
7. ADJUST TO GRADE
8. INSTALL 12' WIDE ACCESS ROAD PER DETAIL 2 SHEET D.103
9. CONSTRUCT 4'X4' INLET WITH GRATE PER DETAIL 6 SHEET D.105
10. INSTALL 18"ø RCP
11. ALL UNIMPROVED AREAS DISTURBED DURING CONSTRUCTION SHALL BE RE-VEGETATED WITH NATIVE SEED MIX. INSTALL AN EROSION CONTROL BLANKET, #AEC-SEGRN4 (OR EQUAL) FOR AREAS WITH SLOPES OVER 10%
12. INSTALL 1" WATER METER PER DETAIL SHEET D.101

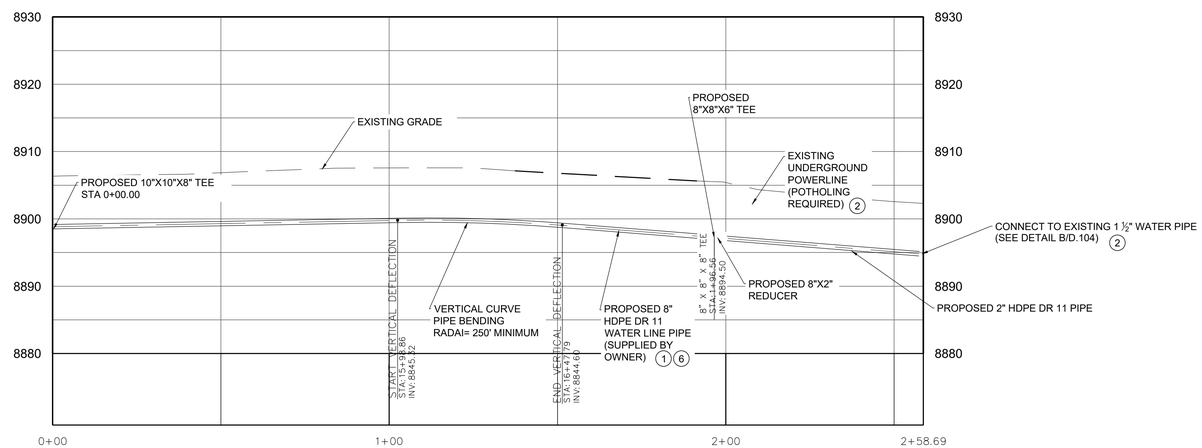

PROFILE

SCALE: HOR: 1"= 20'-0"
VER: 1"= 10'-0"

DISCLAIMER NOTE

UTILITY LOCATIONS SHOWN HEREON ARE APPROXIMATE ONLY. IT SHALL BE THE CONTRACTOR'S RESPONSIBILITY TO DETERMINE THE EXACT HORIZONTAL AND VERTICAL LOCATION OF ALL EXISTING UNDERGROUND AND OVERHEAD UTILITIES PRIOR TO COMMENCING CONSTRUCTION. NO REPRESENTATION IS MADE THAT ALL EXISTING UTILITIES ARE SHOWN HEREON. THE ENGINEER ASSUMES NO RESPONSIBILITY FOR UTILITIES NOT SHOWN OR UTILITIES NOT SHOWN IN THEIR PROPER LOCATION.

GILSON ENGINEERING
Consulting Engineers & Surveyors
12401 SOUTH 450 EAST, BUILDING C, UNIT 2, DRAPER, UT 84020
PHONE: (801) 571-9414 FAX: (801) 571-9449

LICENSED PROFESSIONAL ENGINEER
03/18/2022
No. 362118
Bradley S. Gilson
STATE OF UTAH

POWDER MOUNTAIN WATER AND SEWER IMPROVEMENT DISTRICT

REV/ DATE	BY	COMMENTS

REVISIONS

1" SCALE MEASURES 1" ON FULL SIZE SHEET
ADJUST FOR HALF SIZE SHEETS

DATE: FEBRUARY 2022
DRAWING NAME:
DESIGNED/DRAWN BY: JM/BP
CHECKED: ---
APPROVED: ---

8"WATER SERVICE PLAN AND PROFILE

TOP OF MOUNTAIN WATER SYSTEM
POWDER MOUNTAIN WATER & SEWER IMPROVEMENT DISTRICT
WEBER COUNTY, UTAH

REVISION: A
PROJ. # POW.019

C.204

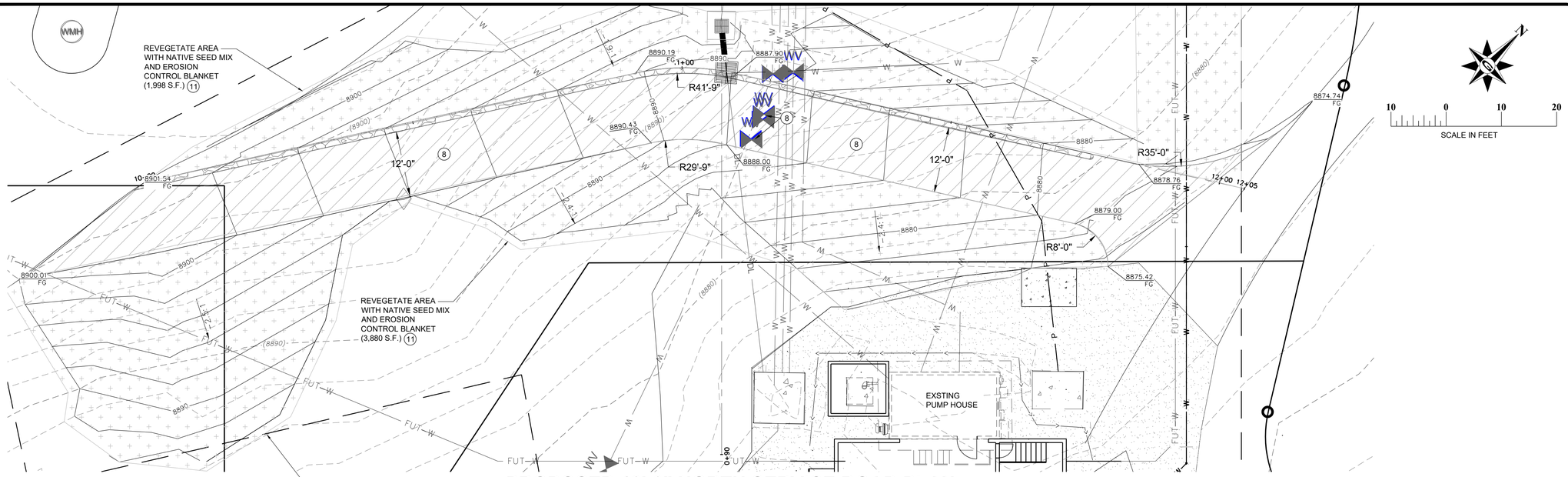

PROPOSED 12'-0" NORTH SERVICE ROAD PLAN

SCALE: 1"= 10'-0"

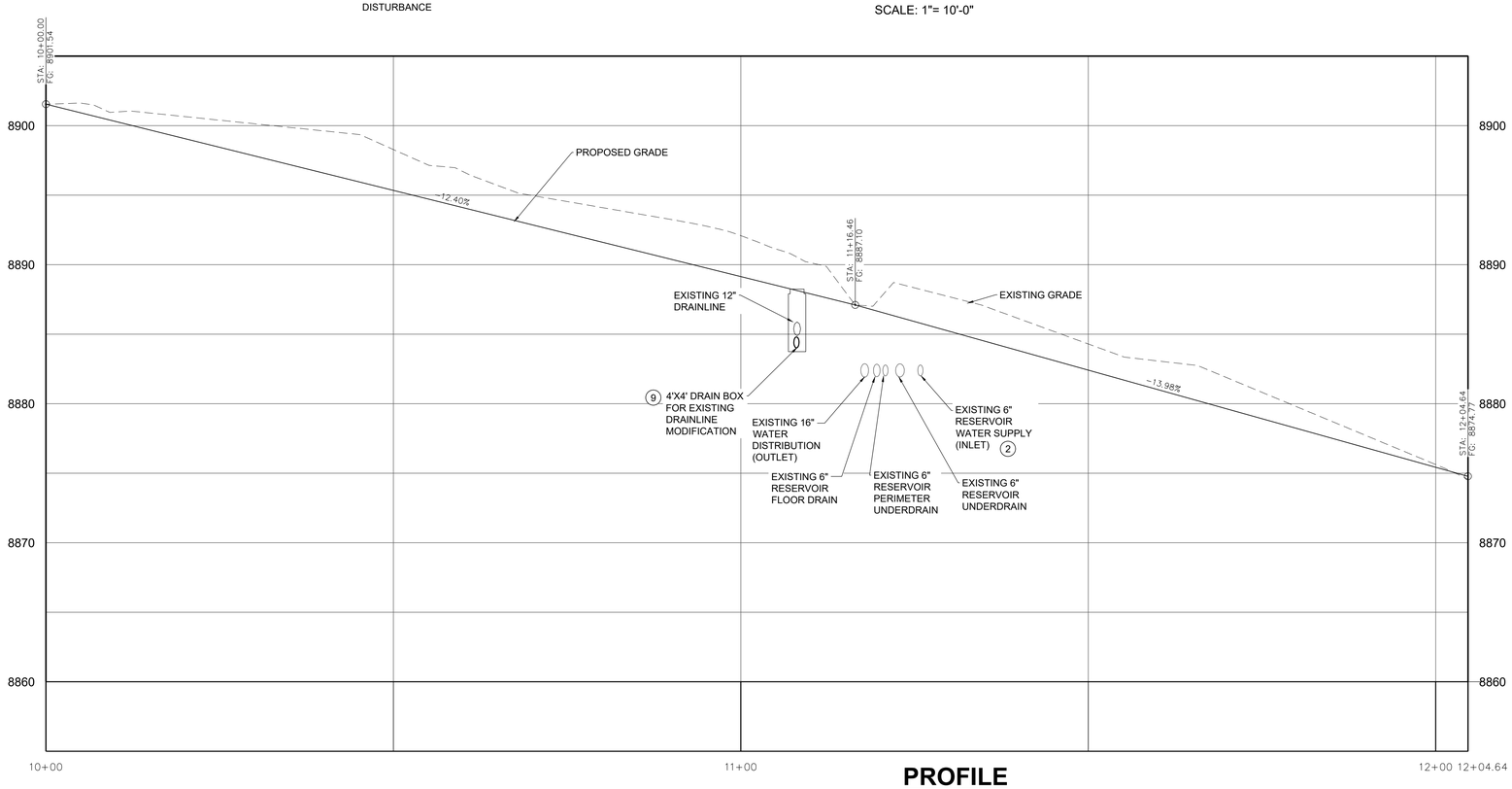

PROFILE

SCALE: HOR: 1"= 10'-0"
VER: 1"= 5'-0"

CONSTRUCTION NOTES

1. PROPOSED WATER LINES TO BE INSTALLED AT A MINIMUM OF 9' DEEP IN PARKING AREAS AND ROADWAYS, AND 7' DEEP IN ALL OTHER AREAS
2. CONTRACTOR SHALL POTHOLE EXISTING LINE PRIOR TO ORDERING PARTS TO VERIFY PIPE LOCATION, TYPE & SIZE.
3. DOUBLE POLYWRAP ALL DUCTILE IRON D.I. PIPE.
4. CONSTRUCT AIR VAC DETAIL A SHEET D.101
5. CONSTRUCT FIRE HYDRANT ASSEMBLY PER DETAIL C SHEET D.104
6. CONSTRUCT 8"ø HDPE DR11 PIPE (PIPE SUPPLIED BY OWNER)
7. ADJUST TO GRADE
8. INSTALL 12' WIDE ACCESS ROAD PER DETAIL 2 SHEET D.103
9. CONSTRUCT 4'X4' INLET WITH GRATE PER DETAIL 6 SHEET D.105
10. INSTALL 18"ø RCP
11. ALL UNIMPROVED AREAS DISTURBED DURING CONSTRUCTION SHALL BE RE-VEGETATED WITH NATIVE SEED MIX. INSTALL AN EROSION CONTROL BLANKET, #AEC-SEGRN4 (OR EQUAL) FOR AREAS WITH SLOPES OVER 10%
12. INSTALL 1" WATER METER PER DETAIL SHEET D.101

DISCLAIMER NOTE

UTILITY LOCATIONS SHOWN HEREON ARE APPROXIMATE ONLY. IT SHALL BE THE CONTRACTOR'S RESPONSIBILITY TO DETERMINE THE EXACT HORIZONTAL AND VERTICAL LOCATION OF ALL EXISTING UNDERGROUND AND OVERHEAD UTILITIES PRIOR TO COMMENCING CONSTRUCTION. NO REPRESENTATION IS MADE THAT ALL EXISTING UTILITIES ARE SHOWN HEREON. THE ENGINEER ASSUMES NO RESPONSIBILITY FOR UTILITIES NOT SHOWN OR UTILITIES NOT SHOWN IN THEIR PROPER LOCATION.

GILSON ENGINEERING
Consulting Engineers & Surveyors
12401 SOUTH 450 EAST, BUILDING C, UNIT 2, DRAPER, UT 84020
PHONE: (801) 571-9414 FAX: (801) 571-9449

LICENSED PROFESSIONAL ENGINEER
03/18/2022
No. 362118
Bradley S. Gilson
STATE OF UTAH

POWDER MOUNTAIN WATER AND SEWER IMPROVEMENT DISTRICT

REV/ DATE	BY	COMMENTS

REVISIONS

1" SCALE MEASURES 1" ON FULL SIZE SHEET
ADJUST FOR HALF SIZE SHEETS

DATE: FEBRUARY 2022
DRAWING NAME:
DESIGNED/DRAWN BY: JM/BP
CHECKED: ---
APPROVED: ---

NORTH ACCESS ROAD PLAN AND PROFILE

TOP OF MOUNTAIN WATER SYSTEM
POWDER MOUNTAIN WATER & SEWER IMPROVEMENT DISTRICT
WEBER COUNTY, UTAH

REVISION: A

PROJ. # POW.019

C.205

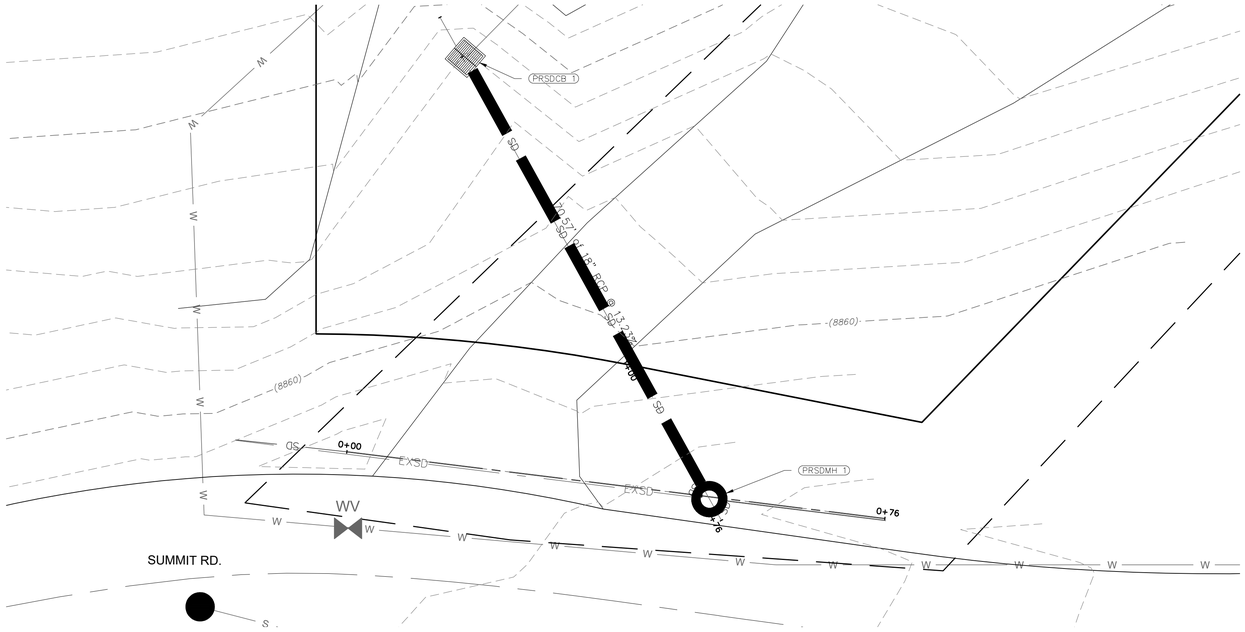

EXISTING & PROPOSED 18" RCP W/DRAIN BOXES

SCALE: 1"= 10'-0"

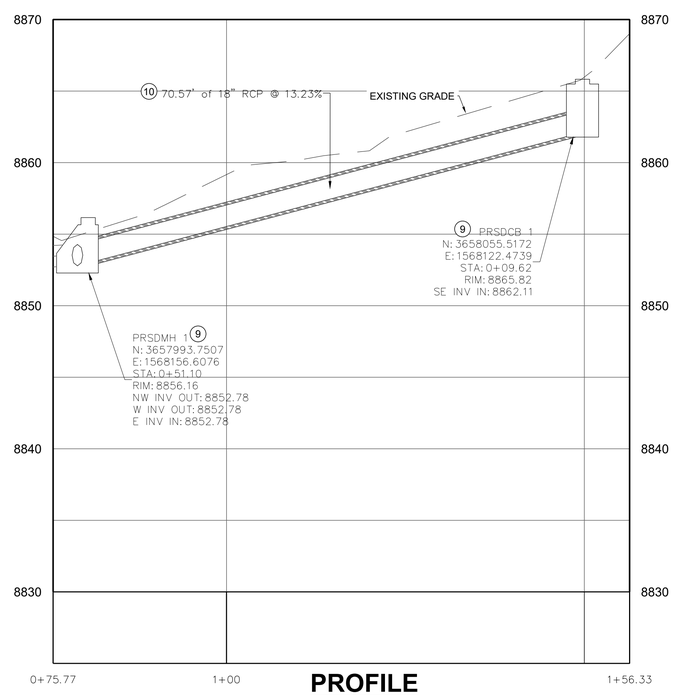

PROFILE

SCALE: HOR: 1"= 10'-0"
VER: 1"= 5'-0"

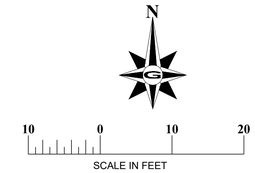

CONSTRUCTION NOTES

1. PROPOSED WATER LINES TO BE INSTALLED AT A MINIMUM OF 9' DEEP IN PARKING AREAS AND ROADWAYS, AND 7' DEEP IN ALL OTHER AREAS
2. CONTRACTOR SHALL POTHOLE EXISTING LINE PRIOR TO ORDERING PARTS TO VERIFY PIPE LOCATION, TYPE & SIZE.
3. DOUBLE POLYWRAP ALL DUCTILE IRON D.I. PIPE.
4. CONSTRUCT AIR VAC DETAIL A SHEET D.101
5. CONSTRUCT FIRE HYDRANT ASSEMBLY PER DETAIL C SHEET D.104
6. CONSTRUCT 8"ø HDPE DR11 PIPE (PIPE SUPPLIED BY OWNER)
7. ADJUST TO GRADE
8. INSTALL 12' WIDE ACCESS ROAD PER DETAIL 2 SHEET D.103
9. CONSTRUCT 4'X4' INLET WITH GRATE PER DETAIL 6 SHEET D.105
10. INSTALL 18"ø RCP
11. ALL UNIMPROVED AREAS DISTURBED DURING CONSTRUCTION SHALL BE RE-VEGETATED WITH NATIVE SEED MIX. INSTALL AN EROSION CONTROL BLANKET, #AEC-SEGRN4 (OR EQUAL) FOR AREAS WITH SLOPES OVER 10%
12. INSTALL 1" WATER METER PER DETAIL SHEET D.101

DISCLAIMER NOTE

UTILITY LOCATIONS SHOWN HEREON ARE APPROXIMATE ONLY. IT SHALL BE THE CONTRACTOR'S RESPONSIBILITY TO DETERMINE THE EXACT HORIZONTAL AND VERTICAL LOCATION OF ALL EXISTING UNDERGROUND AND OVERHEAD UTILITIES PRIOR TO COMMENCING CONSTRUCTION. NO REPRESENTATION IS MADE THAT ALL EXISTING UTILITIES ARE SHOWN HEREON. THE ENGINEER ASSUMES NO RESPONSIBILITY FOR UTILITIES NOT SHOWN OR UTILITIES NOT SHOWN IN THEIR PROPER LOCATION.

GILSON ENGINEERING
Consulting Engineers & Surveyors
12401 SOUTH 450 EAST BUILDING C, UNIT 2, DRAPER, UT 84020
PHONE: (801) 571-9414 FAX: (801) 571-9449

LICENSED PROFESSIONAL ENGINEER
03/18/2022
No. 362118
Bradley S. Gilson
STATE OF UTAH

POWDER MOUNTAIN WATER AND SEWER IMPROVEMENT DISTRICT

REV/ DATE	BY	COMMENTS

REVISIONS

1" SCALE MEASURES 1" ON FULL SIZE SHEET
ADJUST FOR HALF SIZE SHEETS

DATE: FEBRUARY 2022
DRAWING NAME:
DESIGNED/DRAWN BY: JM/BP
CHECKED: ---
APPROVED: ---

STORM DRAIN IMPROVEMENTS

TOP OF MOUNTAIN WATER SYSTEM
POWDER MOUNTAIN WATER & SEWER IMPROVEMENT DISTRICT
WEBER COUNTY, UTAH

REVISION: A

PROJ. # POW.019

C.206

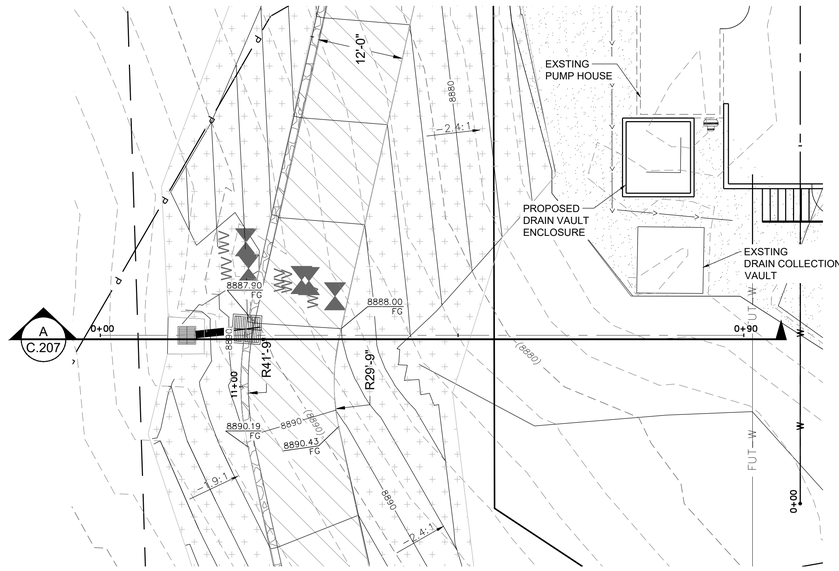

PROPOSED NORTH SERVICE ROAD PLAN

SCALE: 1"= 10'-0"

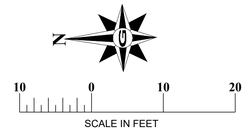

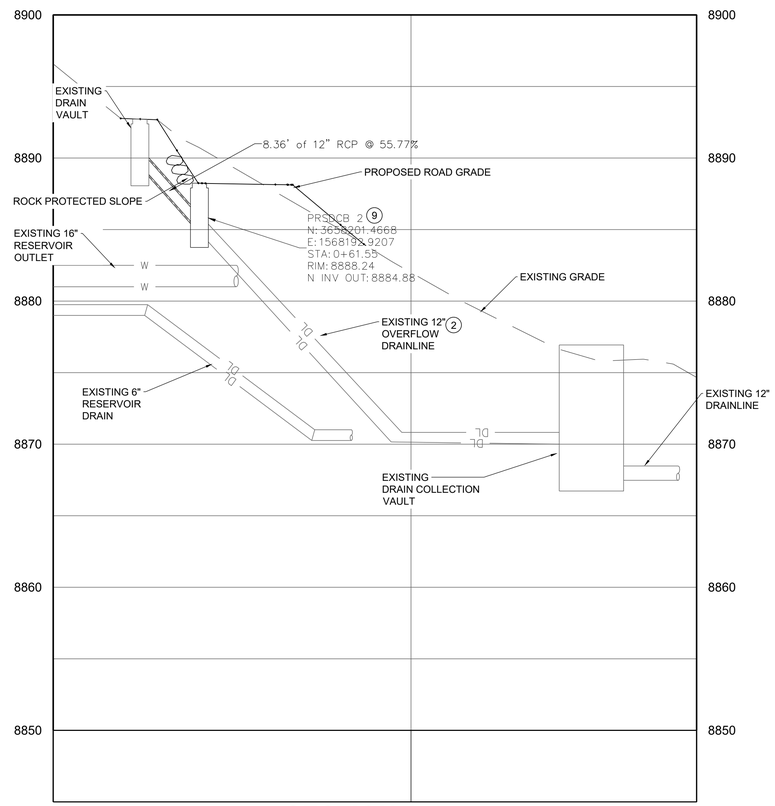

SECTION A-A

SCALE: HOR: 1"= 10'-0"
VER: 1"= 5'-0"

CONSTRUCTION NOTES

1. PROPOSED WATER LINES TO BE INSTALLED AT A MINIMUM OF 9' DEEP IN PARKING AREAS AND ROADWAYS, AND 7' DEEP IN ALL OTHER AREAS.
2. CONTRACTOR SHALL POTHOLE EXISTING LINE PRIOR TO ORDERING PARTS TO VERIFY PIPE LOCATION, TYPE & SIZE.
3. DOUBLE POLYWRAP ALL DUCTILE IRON D.I. PIPE.
4. CONSTRUCT AIR VAC DETAIL A SHEET D.101
5. CONSTRUCT FIRE HYDRANT ASSEMBLY PER DETAIL C SHEET D.104
6. CONSTRUCT 8"ø HDPE DR11 PIPE (PIPE SUPPLIED BY OWNER)
7. ADJUST TO GRADE
8. INSTALL 12' WIDE ACCESS ROAD PER DETAIL 2 SHEET D.103
9. CONSTRUCT 4'X4' INLET WITH GRATE PER DETAIL 6 SHEET D.105
10. INSTALL 18"ø RCP
11. ALL UNIMPROVED AREAS DISTURBED DURING CONSTRUCTION SHALL BE RE-VEGETATED WITH NATIVE SEED MIX. INSTALL AN EROSION CONTROL BLANKET, #AEC-SEGRN4 (OR EQUAL) FOR AREAS WITH SLOPES OVER 10%
12. INSTALL 1" WATER METER PER DETAIL SHEET D.101

DISCLAIMER NOTE

UTILITY LOCATIONS SHOWN HEREON ARE APPROXIMATE ONLY. IT SHALL BE THE CONTRACTOR'S RESPONSIBILITY TO DETERMINE THE EXACT HORIZONTAL AND VERTICAL LOCATION OF ALL EXISTING UNDERGROUND AND OVERHEAD UTILITIES PRIOR TO COMMENCING CONSTRUCTION. NO REPRESENTATION IS MADE THAT ALL EXISTING UTILITIES ARE SHOWN HEREON. THE ENGINEER ASSUMES NO RESPONSIBILITY FOR UTILITIES NOT SHOWN OR UTILITIES NOT SHOWN IN THEIR PROPER LOCATION.

GILSON ENGINEERING
Consulting Engineers & Surveyors
12401 SOUTH 450 EAST BUILDING C, UNIT 2, DRAPER, UT 84020
PHONE: (801) 571-9414 FAX: (801) 571-9449

LICENSED PROFESSIONAL ENGINEER
03/18/2022
No. 362118
Bradley S. Gilson
STATE OF UTAH

POWDER MOUNTAIN WATER AND SEWER IMPROVEMENT DISTRICT

REV/ DATE	BY	COMMENTS

REVISIONS

1" SCALE MEASURES 1" ON FULL SIZE SHEET
ADJUST FOR HALF SIZE SHEETS

DATE: FEBRUARY 2022
DRAWING NAME:
DESIGNED/DRAWN BY: JM/BP
CHECKED: ---
APPROVED: ---

NORTH SERVICE ROAD PLAN & SECTION

TOP OF MOUNTAIN WATER SYSTEM
POWDER MOUNTAIN WATER & SEWER IMPROVEMENT DISTRICT
WEBER COUNTY, UTAH

REVISION: A

PROJ. # POW.019

C.207

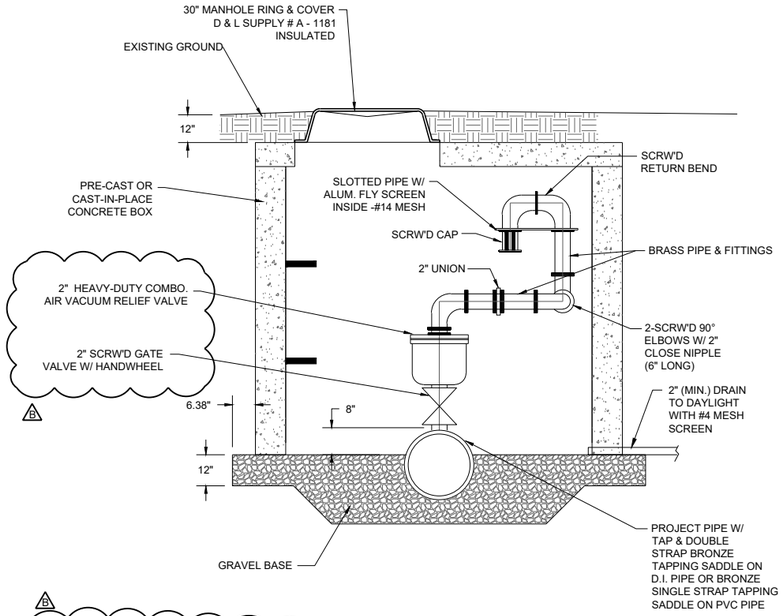

B

NOTE:

1. PROVIDE 2" AIR-VACUUM RELIEF VALVE & PIPING
2. LOCATE RISER BEHIND CURB & GUTTER OR APPROX. 2 FT. FROM R/W LINE, AS DIRECTED BY DISTRICT ENGINEER.

A AIR VACUUM RELIEF VALVE

SCALE: N.T.S.

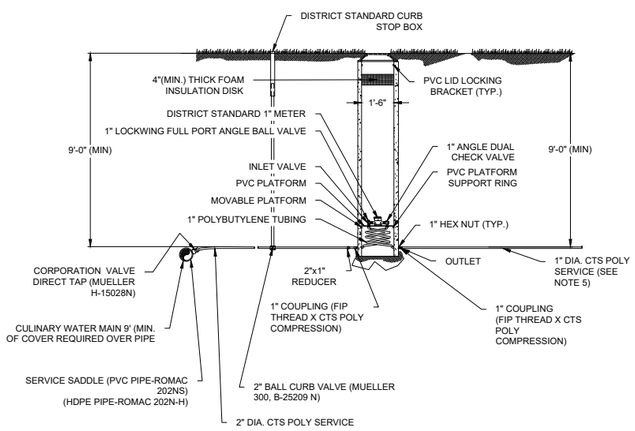

NOTES:

1. METER BOXES SHALL BE 18" DIA. BY 96" DEEP MUELLER-THERMAL-COIL PVC BOXES FOR 1" SINGLE METERS (MUELLER 330CS1896FBBSN)
2. POLYETHYLENE PIPE FOR WATER SERVICES SHALL BE PE 3408 TUBING, SDR-9, COPPER TUBING SIZE AND NSF APPROVED FOR POTABLE WATER.
3. METER SHALL BE INSTALLED IN HORIZONTAL ALIGNMENT, WITH METER FACING UP, ONLY.
4. ALL PIPE, FITTING, AND VALVES SHALL COMPLY WITH NSF STANDARD NO.14 FOR USE WITH POTABLE WATER.
5. THE CUSTOMER IS RESPONSIBLE FOR PROPERLY SIZING THE SERVICE TO DELIVER FLOWS REQUIRED FOR FIRE SPRINKLER SYSTEMS. THE SERVICE FROM THE METER TO THE BUILDING CAN BE UPSIZED FROM 1" DIAMETER IF NECESSARY. CONNECTING FIRE SPRINKLER LINES TO THE 2" SERVICE BEFORE THE METER MAY BE APPROVED BY THE DISTRICT ENGINEER ONLY IF THE REQUIRED FIRE SPRINKLER CANNOT BE DELIVERED THROUGH THE METER.
6. THE DEVELOPER IS RESPONSIBLE FOR INSTALLATION OF THE SERVICE FROM THE MAIN TO THE METER BOX, INCLUDING THE SERVICE SADDLE, CORP STOP, CURB STOP BOX, AND METER BOX.
7. BASED UPON OBSERVATIONS DURING WINTER CONDITIONS, THE DISTRICT HAS DETERMINED THAT 9' (MIN) OF COVER OVER WATER MAINS AND SERVICES IS REQUIRED TO PROTECT AGAINST FREEZING.

D TYPICAL METER PIT DETAIL

SCALE: N.T.S.

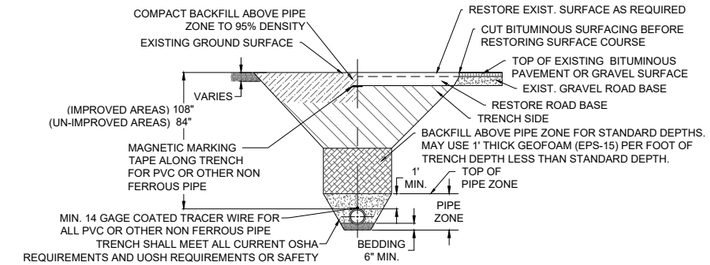

CROSS-SECTION: TYPICAL TRENCH

SAFE BEARING LOADS

SOIL TYPE	SAFE BEARING LOAD (lb/ft)
SAND	1000
SAND & GRAVEL	1500
SAND & GRAVEL CEMENTED WITH CLAY	2000
SHALE	5000

SAFE BEARING LOAD FORMULA

THRUST BLOCK AREA AGAINST TRENCH WALL (SQUARE FEET) = THRUST ON FITTING / SAFE BEARING LOAD OF SOIL

THRUST ON FITTINGS

POUNDS @ 1 POUND PER SQUARE INCH OF WATER PRESSURE*				
PIPE SIZE	TEES	90° BENDS	45° BENDS	22.5° BENDS
4"	18.5	26.1	14.2	7.2
6"	38	53.7	29.1	14.7
8"	65.8	93	50.4	25.5
10"	107.5	152	82.4	41.7
12"	153.1	216.4	117.2	59.4
14"	183.8	260.0	141.0	71.5
16"	237.8	336.3	182.8	92.7
18"	298.6	422.3	229.7	116.5

*MULTIPLY THRUST BY MAXIMUM WATER PRESSURE

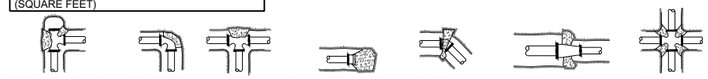

CONCRETE THRUST BLOCK DETAILS

NOTES:

1. WATER LINES 12 INCHES AND LARGER SHALL BE DUCTILE IRON CLASS-51.
2. WATER LINES 10 INCHES AND SMALLER SHALL BE PVC AWWA C900 CLASS 200.
3. VALVES 12 INCHES AND LARGER SHALL BE BUTTERFLY VALVES.
4. WHENEVER POSSIBLE "HOT TAP" CONNECTIONS REQUIRED. HOT TAP VALVE TO BE SUPPORTED DURING CONNECTION. CONTRACTOR TO NOTIFY CITY 24 HOURS IN ADVANCE OF MAKING CONNECTION.
5. PIPE ZONE SHALL BE BACKFILLED WITH 3/4" GRAVEL MATERIAL.
6. TRACING WIRE TO BE BROUGHT OUTSIDE OF BOTTOM PORTION OF VALVE BOX AND INSIDE TOP TO SURFACE.
7. FURNISH AND INSTALL POLY-WRAP ON DUCTILE IRON PIPE. POLY-WRAP MAY BE DELETED WHERE DIRECTED BY DISTRICT ENGINEER.
8. WHERE COLLAPSIBLE SOILS ARE ENCOUNTERED, FURNISH, PLACE AND COMPACT IMPORTED BACKFILL MATERIALS AS REQUIRED AND AS DIRECTED.
9. SEE DETAIL "A" / C.504 FOR PIPE BEDDING SPECIFICATIONS
10. WHERE THE TRENCH BOTTOM SOIL CAN BE CUT AND GRADED WITHOUT DIFFICULTY, HDPE PRESSURE PIPE MAY BE INSTALLED DIRECTLY ON THE PREPARED TRENCH BOTTOM. FOR HDPE PRESSURE PIPE, THE TRENCH BOTTOM MAY UNDULATE, BUT MUST SUPPORT THE PIPE SMOOTHLY AND BE FREE OF RIDGES, HOLLOWS, AND LUMPS.

B WATERLINE TRENCH DETAIL

SCALE: N.T.S.

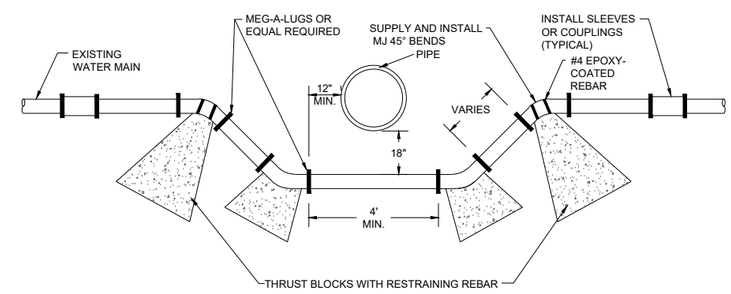

NOTES:

1. DISTRICT TO BE GIVEN 24 HOUR NOTICE BEFORE LOOPING ANY WATERLINE

C WATERLINE LOOP

SCALE: N.T.S.

GILSON ENGINEERING
Consulting Engineers & Surveyors
3405 SOUTH 460 EAST BUILDING C, UNIT 2, SALT LAKE CITY, UT 84020
PHONE: (801) 521-8529 FAX: (801) 521-8949

LICENSED PROFESSIONAL ENGINEER
03/28/2022
No. 362118
Bradley S. Gilson
STATE OF UTAH

REVISIONS

REV	DATE	BY	COMMENTS
B	03/24/22	JM	MODIFY NOTE 1 & ADD 2" DESCRIPTION DETAIL A

1" SCALE MEASURES 1" ON FULL SIZE SHEET
ADJUST FOR HALF SIZE SHEET 0

DATE: FEBRUARY 2022
DRAWING NAME: D.102 DETAILS
DESIGNED/DRAWN BY: JM/BP
CHECKED: -
APPROVED: -

DETAILS

TOP OF MOUNTAIN WATER SYSTEM
POWDER MOUNTAIN WATER & SEWER IMPROVEMENT DISTRICT
WEBER COUNTY, UTAH

REVISION: B

PROJ. # POW.019

D.101

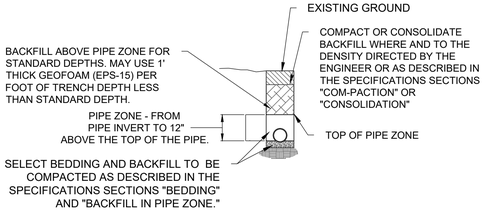

UNIMPROVED TERRAIN TRENCH SECTION

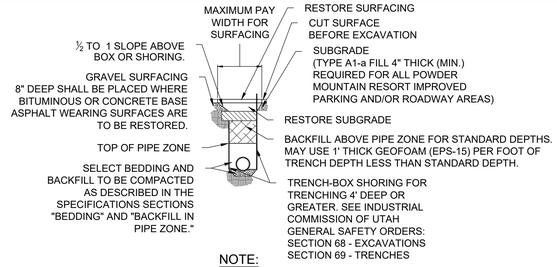

NOTE:

CRUSHED GRAVEL SURFACING 8" DEEP SHALL BE PLACED OVER THE TRENCH WHERE PIPE LINES ARE LOCATED ALONG ROAD SHOULDERS.

IMPROVED TERRAIN TRENCH SECTION

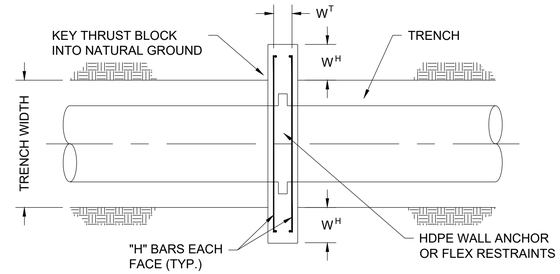

PLAN VIEW

SCALE: N.T.S.

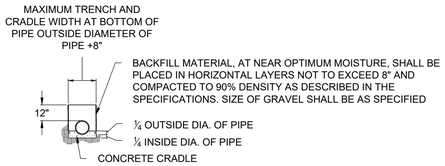

CLASS A PIPE BEDDING

PIPE DIAMETER	MINIMUM WIDTH	MAXIMUM WIDTH
4"	1'-6"	2'-6"
6"	1'-6"	2'-6"
8"	1'-8"	2'-8"
10"	2'-0"	3'-0"
12"	2'-0"	3'-0"
16"	2'-6"	3'-6"
18"	2'-6"	3'-6"

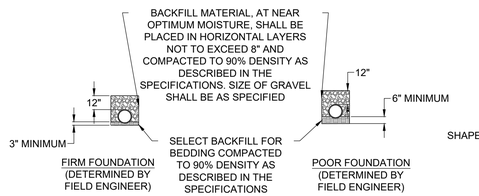

CLASS B PIPE BEDDING

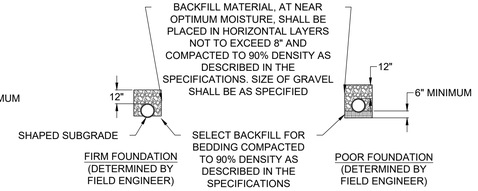

CLASS C PIPE BEDDING

A PIPE BEDDING SPECIFICATIONS

SCALE: N.T.S.

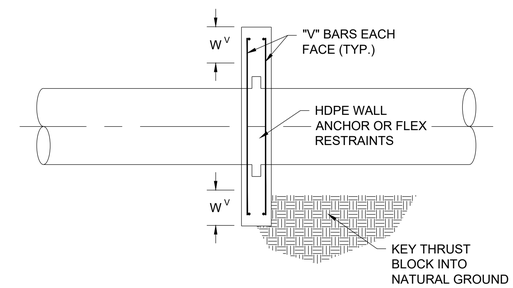

SIDE VIEW

SCALE: N.T.S.

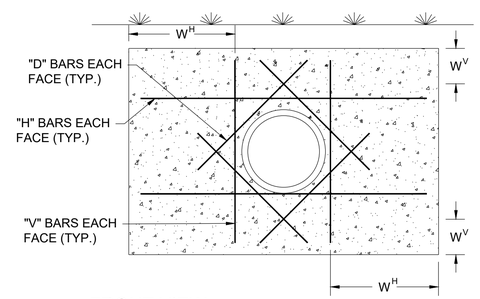

FRONT VIEW

SCALE: N.T.S.

THRUST BLOCK DIMENSIONS										
PIPE SIZE	W^H	W	W	"H" BARS		"V" BARS		"D" BARS		NUMBER OF FLEX RESTRAINTS
				SIZE	NO.	SIZE	NO.	SIZE	NO.	
10" DR11/21	1.5	1.5	1.0	#4	1	#4	1	#4	4	2

NOTES:

1. ELECTROFUSION FLEX RESTRAINTS MAYBE USED IN PLACE OF HDPE WALL ANCHOR. SEE TABLE FOR NUMBER OF FLEX RESTRAINTS REQUIRED FOR EACH PIPE SIZE.
2. A CIRCULAR HOOP TIE AT EACH FACE MAY BE USED IN PLACE OF THE "D" BARS SHOWN IN THE TABLE. THE HOOP TIE SHOULD MATCH THE "D" BAR SIZE SHOWN IN THE TABLE.
3. STRUCTURAL CONCRETE: fc = 4,000 PSI, ABSOLUTE WATER-CEMENT RATIO BY WEIGHT = 0.50, AIR CONTENT = 6% (±1.5%).
4. REINFORCING STEEL SHALL CONFORM TO ASTM A615 GRADE 60.
5. UNLESS NOTED ELSEWHERE ON DRAWINGS, ALL REINFORCING STEEL SHALL HAVE THE FOLLOWING CONCRETE COVER
   5.1. CONCRETE CAST AGAINST EARTH : 3.00 INCH
   5.2. CONCRETE EXPOSED TO EARTH, LIQUID, OR WATER: 1.50 INCH FORMED SURFACES.

B HDPE THRUST BLOCK DETAIL

SCALE: N.T.S.

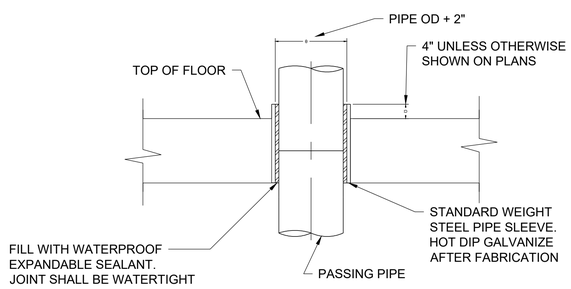

NOTE:
COAT FLOOR SLEEVE WITH SPECIFIED PAINT SYSTEM BEFORE CONCRETE PLACEMENT.

C FLOOR SLEEVE DETAIL

SCALE: N.T.S.

GILSON ENGINEERING
Consulting Engineers & Surveyors
12401 SOUTH 450 EAST BUILDING C, UNIT 2, DRAPER, UT 84020
PHONE: (801) 571-9414 FAX: (801) 571-9449

LICENSED PROFESSIONAL ENGINEER
03/18/2022
No. 362118
Bradley S. Gilson
STATE OF UTAH

POWDER MOUNTAIN WATER AND SEWER IMPROVEMENT DISTRICT

REV	DATE	BY	COMMENTS
			REVISIONS

1" SCALE MEASURES 1" ON FULL SIZE SHEET
ADJUST FOR HALF SIZE SHEETS

DATE: FEBRUARY 2022
DRAWING NAME: D.102 DETAILS
DESIGNED/DRAWN BY: JM/BP
CHECKED: ---
APPROVED: ---

DETAILS

TOP OF MOUNTAIN WATER SYSTEM
POWDER MOUNTAIN WATER & SEWER IMPROVEMENT DISTRICT
WEBER COUNTY, UTAH

REVISION: A
PROJ. # POW.019
D.102

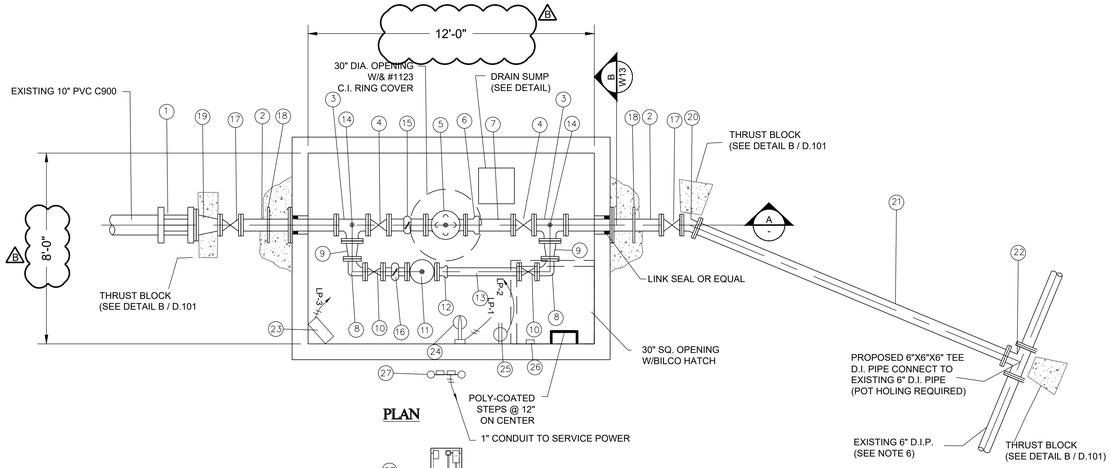

PLAN

NOTE:

ALL EXPOSED METAL PARTS SHALL BE GALVANIZED

PRV VAULT SCHEDULE		
#	QTY	DESCRIPTION
1	1	10" MECH. COUPLINGS
2	2	6" FLxPE CL 150 D.I. PIPE (LG= ±4'-0") W/ WALL FLANGE
3	2	6"x6"x6" FLG'D TEE W/1" TAP
4	2	6" FLxFL GATE VALVE W/ HANDWHEEL
5	1	6" FLxFL PRESSURE REDUCING VALVE
6	1	6" FLG'D COUPLING ADAPTER
7	1	6" FLxPE CL 150 D.I. PIPE (LG= ±24")
8	2	4" FLxFL 90° BEND
9	2	6X4" FLxFL REDUCER
10	2	4" FLxFL GATE VALVE W/ HANDWHEEL
11	1	4" FLG'D PRESSURE REDUCING VALVE
12	1	4" FLG'D COUPLING ADAPTER
13	1	4" FLxPE CL 150 D.I. PIPE (LG= ±3'5.5")
14	2	PRESSURE GAUGE ASSEMBLY (SEE DETAIL)
15	1	6" FLG'D STRAINER
16	1	4" FLG'D STRAINER
17	2	6" FLG'D GATE VALVE W/THRUST BLOCK BELOW
18	2	THRUST RESTRAINT W/WELDED SEEP RING & THRUST BLOCK
19	1	10"x 6" MJxFL REDUCER D.I. PIPE
20	1	6" FLxFL 22.5° BEND
21	1	6" FLxFL CL 150 D.I. PIPE (LG=±14')
22	1	6"x6"x6" FLG'D TEE
23	1	CHROMALOX HORIZONTAL BLOW HEATER LUH-D-05-83-32-41-1 (OR EQUAL)
24	1	WALL MOUNT VAPOR PROOF LUMINAIRE W/ JCT. BOX,GLOBE & GUARD INSTALL ELECTRICAL BOX W/COVER PLATE
25	1	GFI OUTLET INSTALL ELECTRICAL BOX W/COVER PLATE
26	1	SWITCH INSTALL ELECTRICAL BOX W/COVER PLATE
27	1	POWER PEDESTAL (SEE DETAIL 3/ D.103)

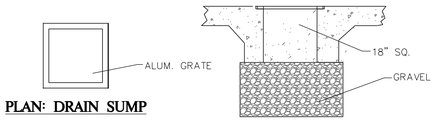

PLAN: DRAIN SUMP

DETAIL: DRAIN SUMP

NOTE:

INSTALL AIR-VACUUM RELIEF VALVES WHERE REQUIRED AND AS DIRECTED.

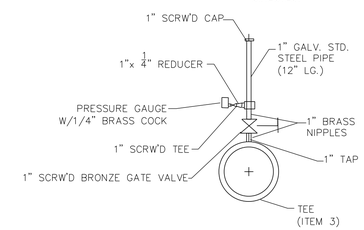

DETAIL: ITEM 14

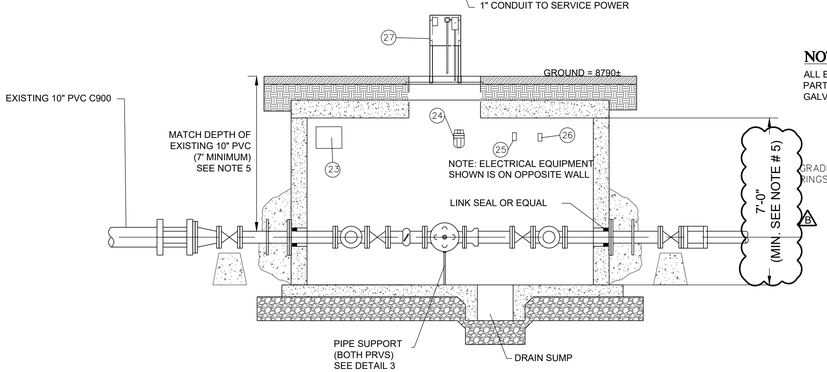

SECTION "A"

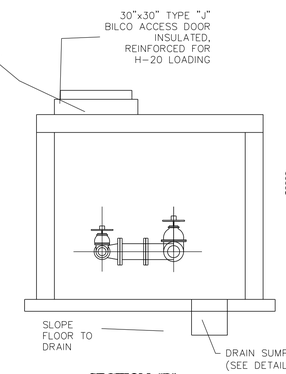

SECTION "B"

NOTES:

1. INSPECTION: PRV VAULT AND SERVICE LINE SHALL BE INSPECTED BY DISTRICT PRIOR TO BACKFILLING.

2. BACKFILL: INSTALL BACKFILL IN LIFTS NOT EXCEEDING 8" AFTER COMPACTION. COMPACT EACH LIFT TO AN AVERAGE DRY DENSITY OF 97% WITH NO DENSITY TEST RESULT LESS THAN 92%.

3. ALL EXPOSED METAL PARTS SHALL BE GALVANIZED

4. FURNISH AND INSTALL WALL MOUNT VAPOR PROOF LUMINAIRE W/ JUNCTION, BOX GLOBE & GUARD AND INSTALL ELECTRICAL BOX W/ COVER PLATE.

5. CONTRACTOR SHALL POTHOLE EXISTING LINE PRIOR TO ORDERING PARTS TO VERIFY PIPE LOCATION, TYPE & SIZE.

6. ALL ELECTRICAL EQUIPMENT FOR PRV VAULTS IS TO BE FURNISHED AND INSTALLED BY OTHERS.

PRV STATION DETAIL

SCALE: NTS

1 / C.102

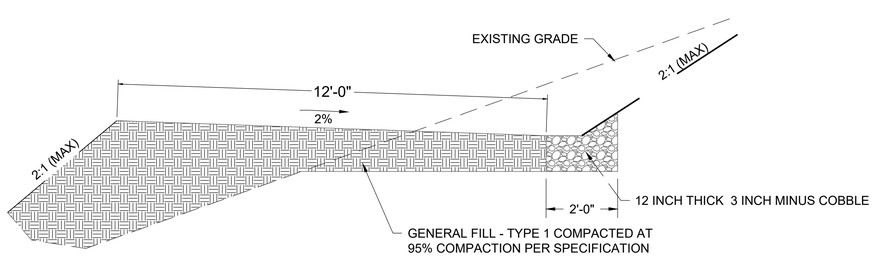

NORTH ACCESS ROAD SECTION

SCALE: NTS

2

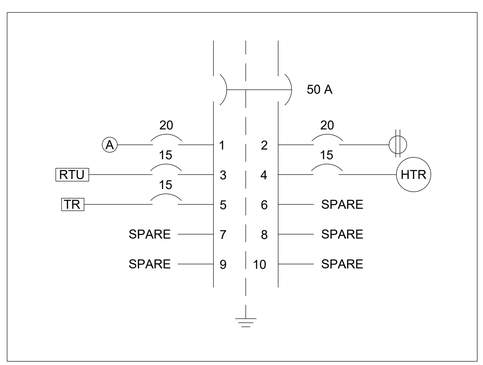

PRV LOAD CENTER

SCALE: NONE

4 / D.103

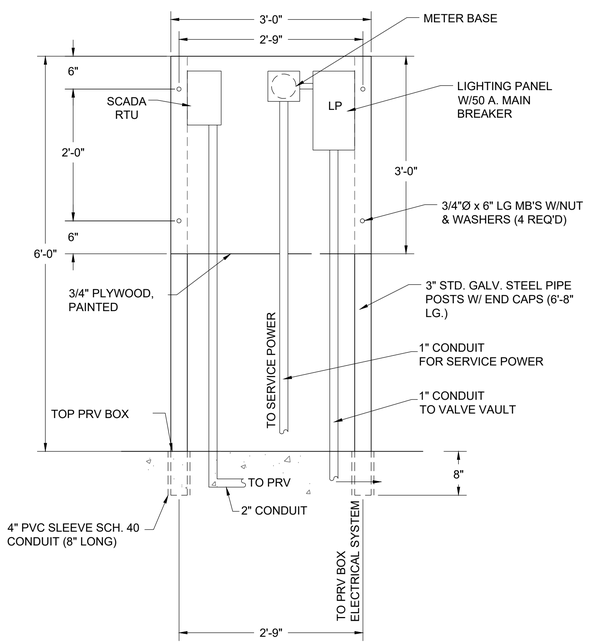

PRV POWER PEDESTAL

SCALE: NONE

3 / D.103

GILSON ENGINEERING
Consulting Engineers & Surveyors
12463 SOUTH 400 EAST BUILDING C, UNIT 2, DRAPER, UT 84020
PHONE: (801) 571-9414 FAX: (801) 571-9449

LICENSED PROFESSIONAL ENGINEER
03/28/2022
No. 362118
Bradley S. Gilson
STATE OF UTAH

POWDER MOUNTAIN WATER AND SEWER IMPROVEMENT DISTRICT

REVISIONS

REV.	DATE	BY	COMMENTS
B	03/28/22	JM	ADD NOTE #6 PRV ELECTRICAL & DIMENSIONS

1" SCALE MEASURES 1" ON FULL SIZE SHEET
ADJUST FOR HALF SIZE SHEETS

DATE: FEBRUARY 2022
DRAWING NAME: SITE DETAILS
DESIGNED/DRAWN BY: JM/BP
CHECKED: ---
APPROVED: ---

SITE DETAILS

TOP OF MOUNTAIN WATER SYSTEM
POWDER MOUNTAIN WATER & SEWER IMPROVEMENT DISTRICT
WEBER COUNTY, UTAH

REVISION: B

PROJ. # POW.019

D.103

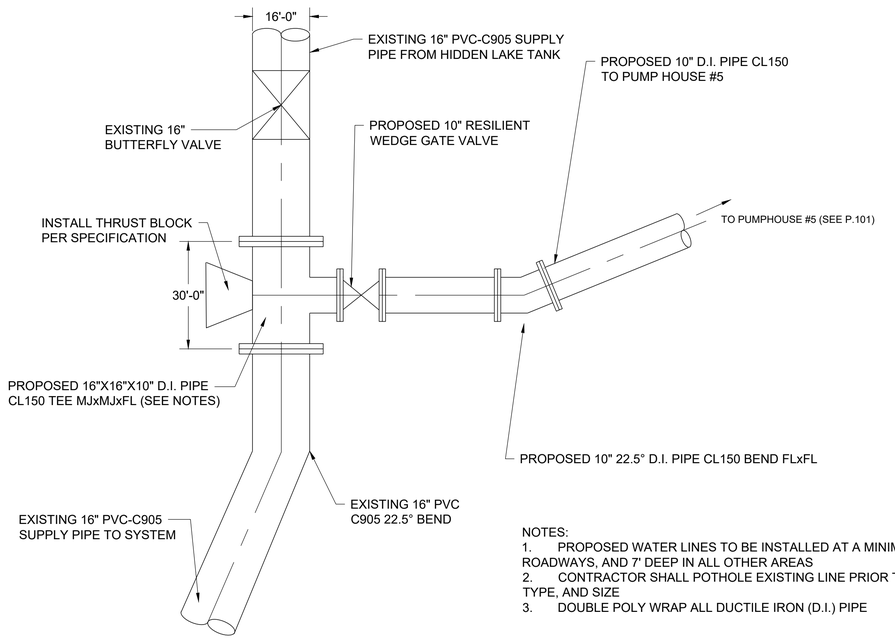

NOTES:
1. PROPOSED WATER LINES TO BE INSTALLED AT A MINIMUM OF 9' DEEP IN PARKING AREAS AND ROADWAYS, AND 7' DEEP IN ALL OTHER AREAS
2. CONTRACTOR SHALL POTHOLE EXISTING LINE PRIOR TO ORDERING PARTS TO VERIFY PIPE LOCATION, TYPE, AND SIZE
3. DOUBLE POLY WRAP ALL DUCTILE IRON (D.I.) PIPE

A CONNECTION DETAIL
SCALE: N.T.S.

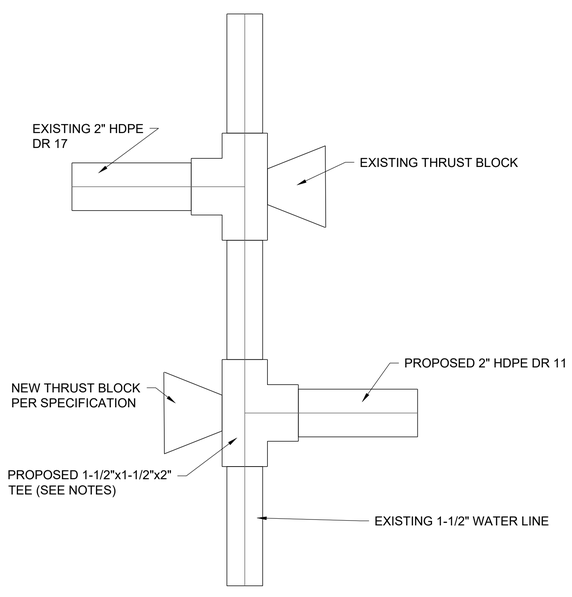

B 2" HDPE CONNECTION DETAIL
SCALE: N.T.S.

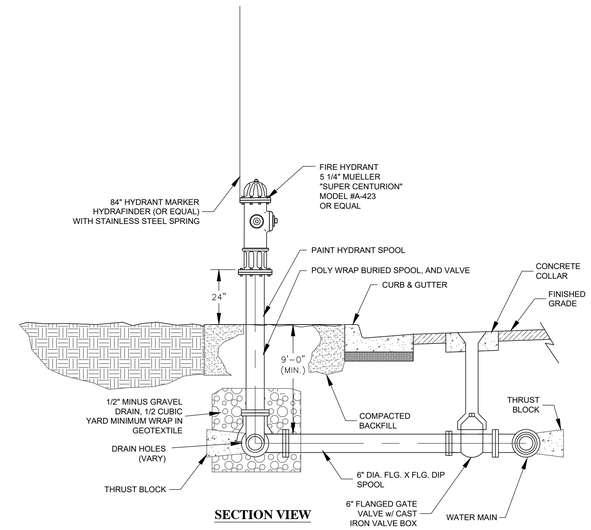

SECTION VIEW

NOTES:
1. HYDRANT SHALL BE "TRAFFIC" TYPE WITH A REPLACEABLE BREAK-AWAY UNIT IMMEDIATELY ABOVE GROUND.

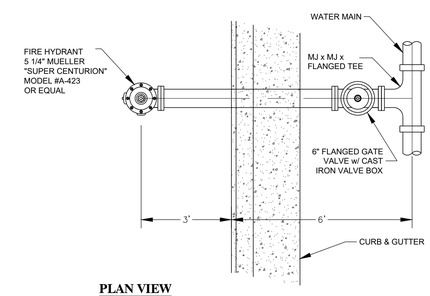

PLAN VIEW

C FIRE HYDRANT CONNECTION DETAIL
SCALE: N.T.S.

GILSON ENGINEERING
Consulting Engineers & Surveyors
12403 SOUTH 450 EAST BUILDING C, UNIT 2, DRAPER, UT 84020
PHONE: (801) 571-9414 • FAX: (801) 571-9449

LICENSED PROFESSIONAL ENGINEER
03/18/2022
No. 362118
Bradley S. Gilson
STATE OF UTAH

POWDER MOUNTAIN WATER AND SEWER IMPROVEMENT DISTRICT

REV	DATE	BY	COMMENTS

REVISIONS

1" SCALE MEASURES 1" ON FULL SIZE SHEET
ADJUST FOR HALF SIZE SHEETS

DATE: FEBRUARY 2022
DRAWING NAME: D.101 DETAILS
DESIGNED/DRAWN BY: JM/BP
CHECKED: ---
APPROVED: ---

DETAILS
TOP OF MOUNTAIN WATER SYSTEM
POWDER MOUNTAIN WATER & SEWER IMPROVEMENT DISTRICT
WEBER COUNTY, UTAH

REVISION: A
PROJ. # POW.019
D.104

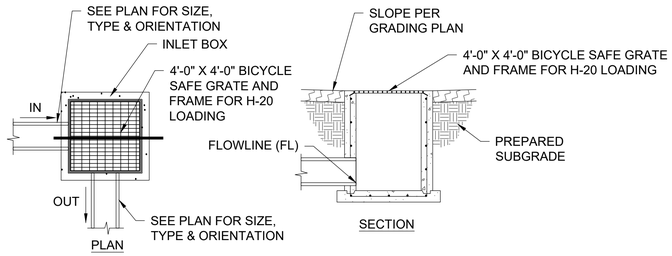

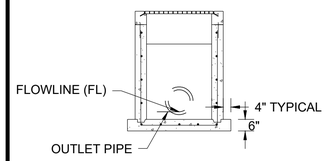

NOTES:

1. BACKFILL: INSTALL BACKFILL IN LIFTS NOT EXCEEDING 6"AFTER COMPACTION EACH LIFT TO AN AVERAGE DRY DENSITY OF 96% WITH NO DENSITY TEST RESULT LESS THAN 95%

2. REINFORCEMENT: ASTM A615, GRADE 60, DEFORMED STEEL ROD. PLACE STEEL PER CRSI MANUAL OF STANDARD PRACTICE.

3. CONCRETE: USE CLASS 4,000 PORTLAND CEMENT CONCRETE

4. PIPE LATERALS: THE DRAWING SHOWS ALTERNATE CONNECTIONS TO THE CATCH BASIN. REFER TO CONSTRUCTION DRAWINGS FOR ACTUAL CONNECTION LOCATIONS

5. LADDER RUNGS: PROVIDE PLASTIC LADDER RUNGS IN BOXES OVER 4'-0" DEEP. PLACE BOTTOM RUNG 6-INCHES ABOVE TOP OF PIPE.
6. ALL REBAR SHALL BE EPOXY COATED.
7. GRATE AND FRAMES SHALL BE HOT-DIPPED GALVANIZED.
8. DOWEL LAPS SHALL BE 24".
9. COAT ALL METAL PARTS WITH ASPHALTUM PAINT.

1 4'X4' INLET BOX
SCALE: N.T.S.

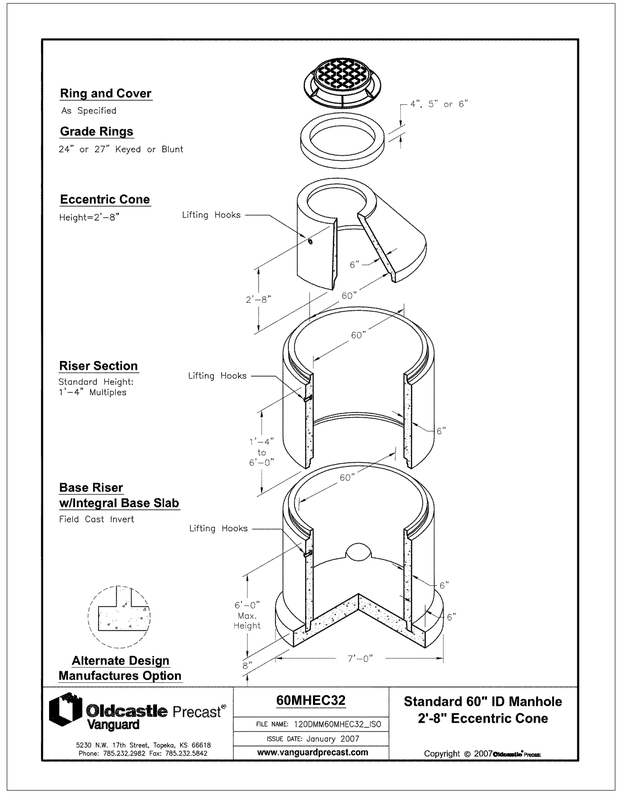

2 5' SDMH DETAIL
SCALE: N.T.S.

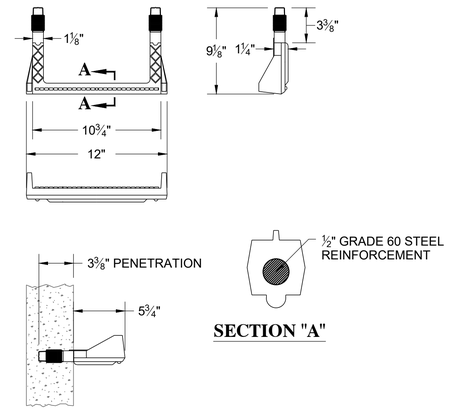

NOTES:

1. STEPS TO BE CAST, UNALTERED, IN MANHOLE WALL IN A STRAIGHT LINE, VERTICALLY, AT SAME TIME THE BARREL OR CONE SECTIONS ARE CAST.

2. IF STEPS ARE NOT CAST INTO MANHOLE BARREL SECTIONS AS MENTIONED ABOVE, STEPS SHALL BE INSTALLED BY THE "PRESS FIT" METHOD FOLLOWING MANUFACTURER'S RECOMMENDED PROCEDURE, AND SHALL NOT BE GROUTED IN PLACE.

3. INSTALLED STEPS SHALL BE CAPABLE OF WITHSTANDING A PULL OUT FORCE OF 2,500LBS. PER LEG FOR A MINIMUM PERIOD OF TWO MINUTES.

5 MANHOLE STEP DETAIL
SCALE: N.T.S.

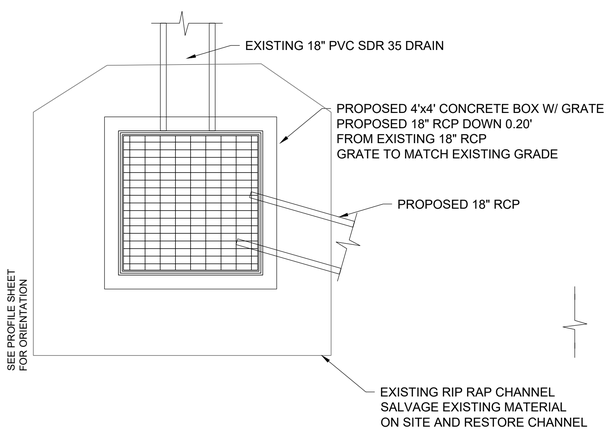

3 4'X4' INLET BOX PLAN A
SCALE: N.T.S.

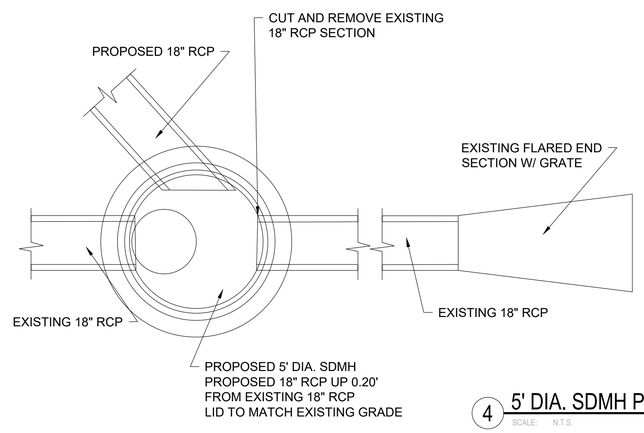

4 5' DIA. SDMH PLAN
SCALE: N.T.S.

GILSON ENGINEERING
Consulting Engineers & Surveyors
12403 SOUTH 450 EAST BUILDING C, UNIT 2, DRAPER, UT 84020
PHONE: (801) 571-9414 • FAX: (801) 571-9449

LICENSED PROFESSIONAL ENGINEER
03/18/2022
No. 362118
Bradley S. Gilson
STATE OF UTAH

POWDER MOUNTAIN WATER AND SEWER IMPROVEMENT DISTRICT

REV	DATE	BY	COMMENTS
		BSG	

REVISIONS

1" SCALE MEASURES 1" ON FULL SIZE SHEET
ADJUST FOR HALF SIZE SHEETS

DATE: FEBRUARY 2022
DRAWING NAME: DETAILS
DESIGNED/DRAWN BY: JM/BP
CHECKED: ---
APPROVED: ---

DETAILS

TOP OF MOUNTAIN WATER SYSTEM
POWDER MOUNTAIN WATER & SEWER IMPROVEMENT DISTRICT
WEBER COUNTY, UTAH

REVISION: A
PROJ. # POW.019

D.105

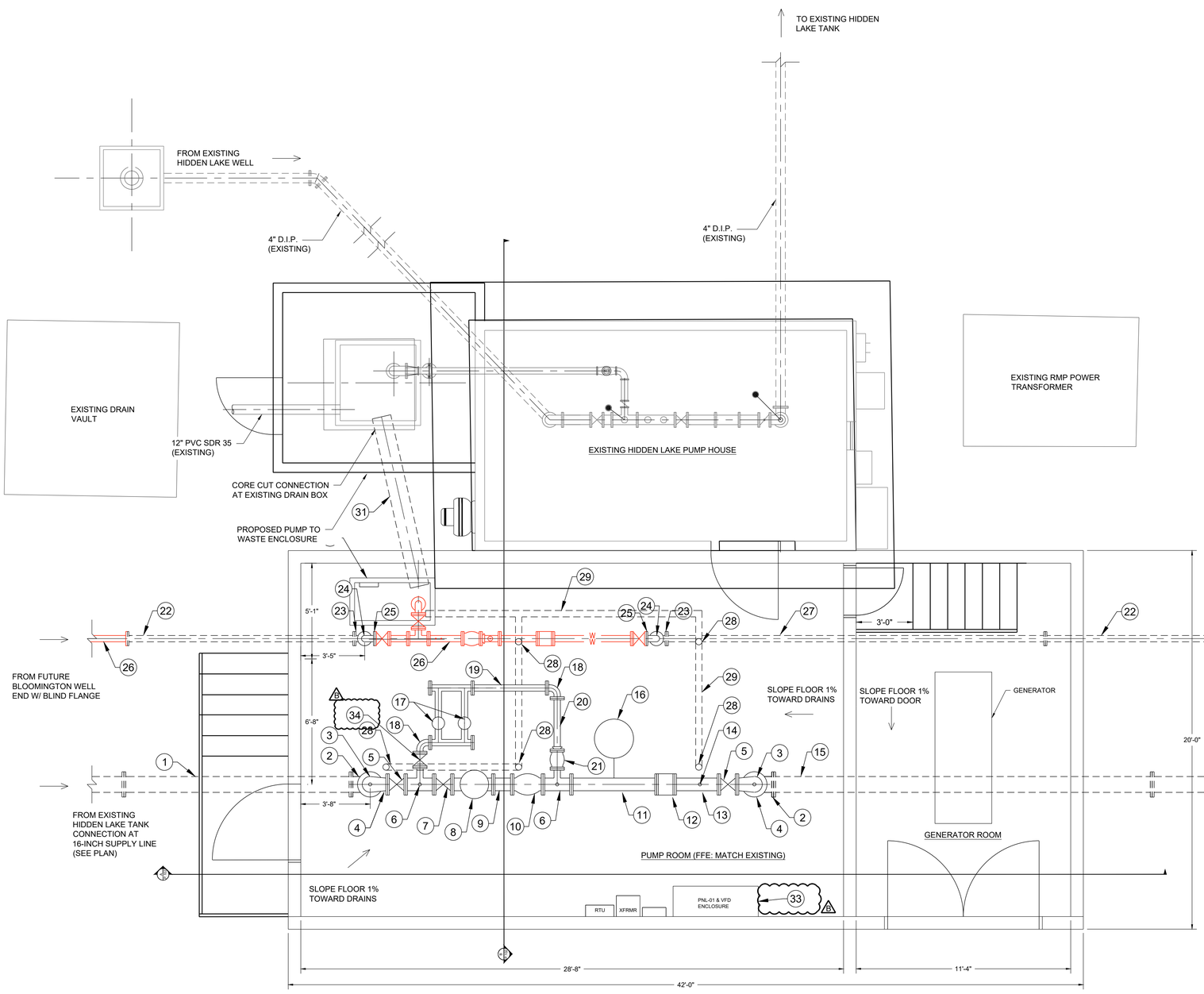

PUMP HOUSE #5 (1 / P.101)
SCALE: 1" = 3'

SCHEDULE OF PLUMBING MATERIAL		
ITEM	QUANTITY	DESCRIPTION
1	1	10" DIA. FLG'D. C.L. 150 D.I. PIPE SPOOL (12'-0" LG. MOL)
2	4	10" DIA. FLG'D. C.L. 150 D.I. PIPE 90 DEG. BEND
3	2	10" DIA. FLG'D. C.L. 150 D.I. PIPE SPOOL (11'-1" LG. MOL)
4	2	10"X8" DIA. FLG'D. C.L. 150 D.I. PIPE 90 DEG. BEND (REDUCER) W/ AIR RELIEF VALVE (SEE DETAIL 5/P.103)
5	2	8" FLG'D. C.L. 150 D.I. PIPE RESILIENT WEDGE GATE VALVE MUELLER W/ MANUAL OPERATOR
6	2	8"X8"X4" FLG'D. C.L. 150 D.I. PIPE TEE W/ 3/4" HOSE BIBB (SAMPLE TAP) AND PRESSURE GAUGE ASSEMBLY (SEE DETAIL 6/P.103)
7	1	8" FLG'D. C.L. 150 D.I. PIPE RESILIENT WEDGE GATE VALVE MUELLER W/ AUTOMATIC OPERATOR
8	1	1500 GPM PUMP (TDH=120-FT) (75 HP) *(PENTAIR AURORA 413 SERIES 8X8X11)* UL LISTED FIRE PUMP REQ'D W/ CONCRETE PEDESTAL (SEE DETAIL 3&4/P.103) AND ALL APPURTENANT ITEMS
9	2	8" DIA. FLG'D. C.L. 150 D.I. PIPE SPOOL (1'-0" LG. MOL)
10	1	8" DIA. FLG'D. C.L. 150 D.I. SWING TYPE CHECK VALVE
11	1	8" DIA. FLG'D. C.L. 150 D.I. PIPE SPOOL (4'-6" LG. MOL)
12	1	8" ABB MAGMETER FLOWMETER
13	1	10" DIA. FLG'D. C.L. 150 D.I. PIPE SPOOL (2'-4" LG. MOL)
14	1	3/4" HOSE BIBB (SAMPLE TAP) AND PRESSURE GAUGE
15	1	10" DIA. FLG'D. C.L. 150 D.I. PIPE SPOOL (20'-0" LG. MOL)
16	1	VERTICAL 100-GAL PRESSURE BLADDER TANK, ZILMET ZHP350 (OR EQUAL)
17	1	SKID MOUNTED PUMP STATION WITH GRUNDFOS PUMPS; TWO PUMPS (HYDRO MPC-E 2CRE) (20 GPM @ TDH=150') (5 HP) SYSTEM INCLUDES: UPSTREAM ISOLATION VALVE AND PRESSURE GAUGE, DOWNSTREAM; CHECK VALVE ISOLATION VALVE AND PRESSURE GAUGE W/ CONCRETE PEDESTAL (SEE DETAIL 1&2/P.103)
18	2	4" DIA. FLG'D. C.L. 150 D.I. PIPE 90 DEG. BEND
19	1	4" DIA. FLG'D. C.L. 150 D.I. PIPE SPOOL (3'-11" LG. MOL)
20	1	4" DIA. FLG'D. C.L. 150 D.I. PIPE SPOOL (2'-9" LG. MOL)
21	1	4" DIA. FLG'D. C.L. 150 D.I. SWING TYPE CHECK VALVE
22	1	4" DIA. FLG'D. C.L. 150 D.I. PIPE SPOOL (12'-0" LG. MOL) WITH BLIND FLANGE FOR FUTURE CONNECTION
23	2	4" DIA. FLG'D. C.L. 150 D.I. PIPE 90 DEG. BEND
24	2	4" DIA. FLG'D. C.L. 150 D.I. PIPE SPOOL (12'-0" LG. MOL)
25	2	4" DIA. FLG'D. C.L. 150 D.I. PIPE 90 DEG. BEND WITH BLIND FLANGE FOR FUTURE CONNECTION
26	1	FUTURE PIPING FOR FUTURE BLOOMINGTON WELL CONNECTION
27	1	4" DIA. FLG'D. C.L. 150 D.I. PIPE SPOOL (20'-0" LG. MOL)
28	5	4" DIA. FLOOR DRAIN
29	1	4" DIA. SCHEDULE 80 FLOOR DRAIN PIPING INCLUDING ALL FITTINGS, CONNECT TO DRAIN BOX (#26) (40' L.F.)
30	1	2'X4' PRECAST BOX WITH GRATE (OLD CASTLE OR EQ.); 5'-6" DEEP
31	1	12" PVC SDR 35 ASTM D3034 GRAVITY PIPE TO DRAIN (9'-2" LG)
32	4	FLOOR SLEEVE (SEE DETAIL C/P.102)
33	1	CONSTRUCT HOUSEKEEPING PADS FOR ELECTRICL EQUPMENT. ALL ELECTRICAL EQUIPMENT TO BE FURNISHED AND INSTALLED BY OTHERS. COORDINATE LOCATION WITH ELECTRICAL. (SEE DETAIL A/P.101)
34	1	4" FLG'D. C.L. 150 D.I. PIPE RESILIENT WEDGE GATE VALVE MUELLER W/ AUTOMATIC OPERATOR

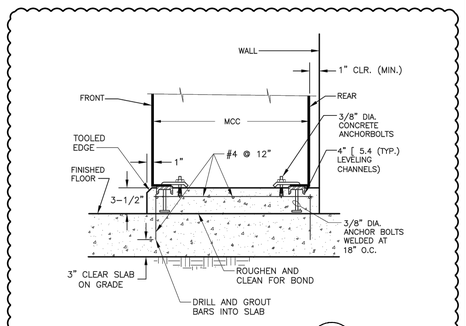

HOUSEKEEPING PAD (A / P.101)
SCALE: N.T.S.

GILSON ENGINEERING
Consulting Engineers & Surveyors
13143 SOUTH 400 EAST BUILDING C, UNIT 2, DRAPER, UT 84020
PHONE: (801) 571-9414 FAX: (801) 571-9449

LICENSED PROFESSIONAL ENGINEER
3/31/22
No. 362118
Bradley S. Gilson
STATE OF UTAH

POWDER MOUNTAIN WATER AND SEWER IMPROVEMENT DISTRICT

REVISIONS

REV	DATE	BY	COMMENTS
A	03/04/22	JM	ADD SCH PLUMBING AT #33,#34 & ADD DETAIL A
B	03/31/22	BP	REV SCH PLUMBING #8, 10" HDPE CONNECTION
C			

1" SCALE MEASURES 1" ON FULL SIZE SHEET
ADJUST FOR HALF SIZE SHEETS

DATE: FEBRUARY 2022
DRAWING NAME: PIPING PLANS
DESIGNED/DRAWN BY: JM/BP
CHECKED: ---
APPROVED: ---

PIPING PLAN

TOP OF MOUNTAIN WATER SYSTEM
POWDER MOUNTAIN WATER & SEWER IMPROVEMENT DISTRICT
WEBER COUNTY, UTAH

REVISION: C
PROJ. # POW.019

P.101

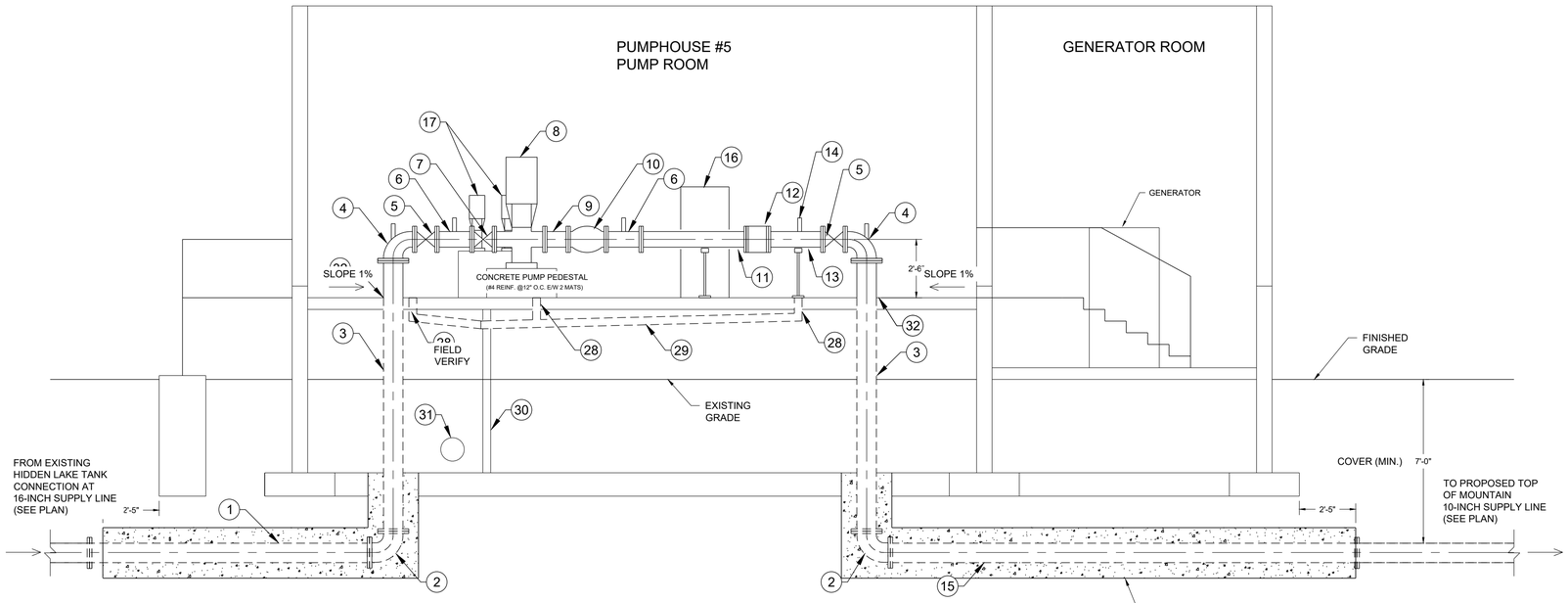

PUMP HOUSE #5
SECTION 'A'
SCALE: 1" = 3'

A
P.101

CONCRETE ENCASEMENT, 8" THICK (MIN.) AROUND PIPE, REINFORCED W/ (8) #5 EQUALLY SPACED AROUND (PARALLEL W/ PIPE), #5 TIES @ 12" O.C. (PERPENDICULAR W/ PIPE), 3" CLEAR, WRAP PIPE W/ ½" THICK PREFORMED EXPANSION JOINT FILLER AND FASTEN WITH METAL BAND @ EACH END

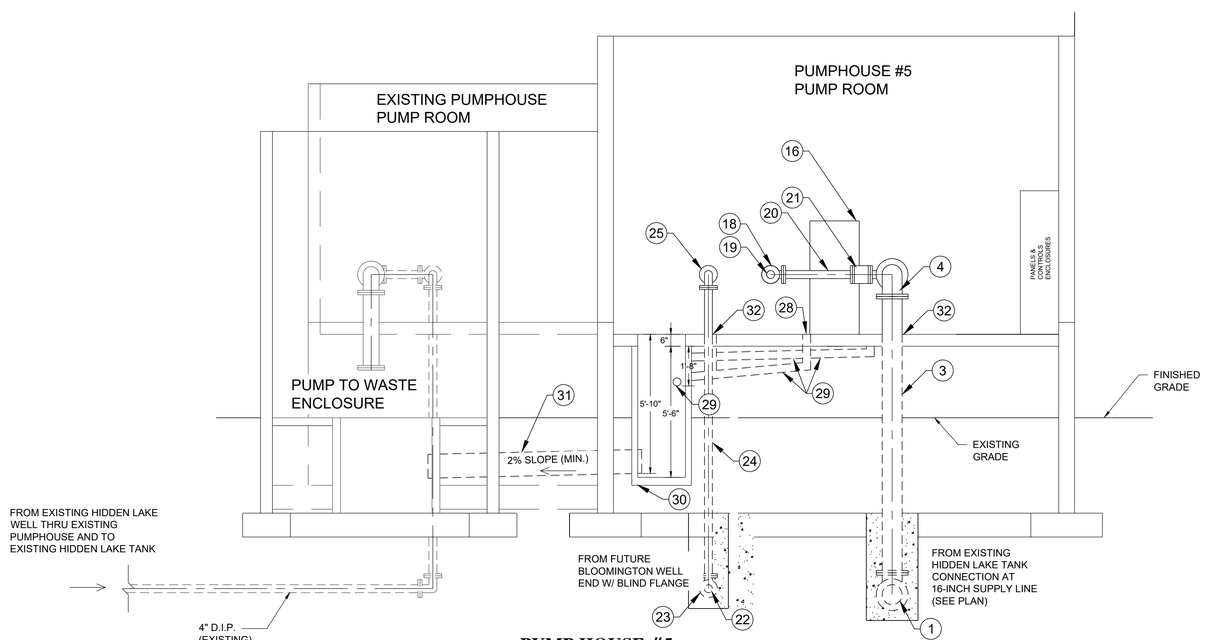

PUMP HOUSE #5
SECTION 'B'
SCALE: 1" = 3'

A
P.101

SCHEDULE OF PLUMBING MATERIAL		
ITEM	QUANTITY	DESCRIPTION
1	1	10" DIA. FLG'D. C.L. 150 D.I. PIPE SPOOL (12'-0" LG. MOL)
2	4	10" DIA. FLG'D. C.L. 150 D.I. PIPE 90 DEG. BEND
3	2	10" DIA. FLG'D. C.L. 150 D.I. PIPE SPOOL (11'-1" LG. MOL)
4	2	10"X8" DIA. FLG'D. C.L. 150 D.I. PIPE 90 DEG. BEND (REDUCER) W/ AIR RELIEF VALVE (SEE DETAIL 5/P.103)
5	2	8" FLG'D. C.L. 150 D.I. PIPE RESILIENT WEDGE GATE VALVE MUELLER W/ MANUAL OPERATOR
6	2	8"X8"X4" FLG'D. C.L. 150 D.I. PIPE TEE W/ 3/4" HOSE BIBB (SAMPLE TAP) AND PRESSURE GAUGE ASSEMBLY (SEE DETAIL 6/P.103)
~~7~~	~~1~~	~~8" FLG'D. C.L. 150 D.I. PIPE RESILIENT WEDGE GATE VALVE MUELLER W/ AUTOMATIC OPERATOR~~
8	1	1500 GPM PUMP (TDH=120-FT) (75 HP) *(PENTAIR AURORA 413 SERIES 8X8X11)* UL LISTED FIRE PUMP REQ'D W/ CONCRETE PEDESTAL (SEE DETAIL 3&4/P.103) AND ALL APPURTENANT ITEMS
9	2	8" DIA. FLG'D. C.L. 150 D.I. PIPE SPOOL (1'-0" LG. MOL)
10	1	8" DIA. FLG'D. C.L. 150 D.I. SWING TYPE CHECK VALVE
11	1	8" DIA. FLG'D. C.L. 150 D.I. PIPE SPOOL (4'-6" LG. MOL)
12	1	8" ABB MAGMETER FLOWMETER
13	1	10" DIA. FLG'D. C.L. 150 D.I. PIPE SPOOL (2'-4" LG. MOL)
14	1	3/4" HOSE BIBB (SAMPLE TAP) AND PRESSURE GAUGE
15	1	10" DIA. FLG'D. C.L. 150 D.I. PIPE SPOOL (20'-0" LG. MOL)
16	1	VERTICAL 100-GAL PRESSURE BLADDER TANK, ZILMET ZHP350 (OR EQUAL)
17	1	SKID MOUNTED PUMP STATION WITH GRUNDFOS PUMPS; TWO PUMPS (HYDRO MPC-E 2CRE) (20 GPM @ TDH=150') (5 HP) SYSTEM INCLUDES: UPSTREAM; ISOLATION VALVE AND PRESSURE GAUGE, DOWNSTREAM; CHECK VALVE ISOLATION VALVE AND PRESSURE GAUGE W/ CONCRETE PEDESTAL (SEE DETAIL 1&2/P.103)
18	2	4" DIA. FLG'D. C.L. 150 D.I. PIPE 90 DEG. BEND
19	1	4" DIA. FLG'D. C.L. 150 D.I. PIPE SPOOL (3'-11" LG. MOL)
20	1	4" DIA. FLG'D. C.L. 150 D.I. PIPE SPOOL (2'-9" LG. MOL)
21	1	4" DIA. FLG'D. C.L. 150 D.I. SWING TYPE CHECK VALVE
22	1	4" DIA. FLG'D. C.L. 150 D.I. PIPE SPOOL (12'-0" LG. MOL) WITH BLIND FLANGE FOR FUTURE CONNECTION
23	2	4" DIA. FLG'D. C.L. 150 D.I. PIPE 90 DEG. BEND
24	2	4" DIA. FLG'D. C.L. 150 D.I. PIPE SPOOL (12'-0" LG. MOL)
25	2	4" DIA. FLG'D. C.L. 150 D.I. PIPE 90 DEG. BEND WITH BLIND FLANGE FOR FUTURE CONNECTION
26	1	FUTURE PIPING FOR FUTURE BLOOMINGTON WELL CONNECTION
27	1	4" DIA. FLG'D. C.L. 150 D.I. PIPE SPOOL (20'-0" LG. MOL)
28	5	4" DIA. FLOOR DRAIN
29	1	4" DIA. SCHEDULE 80 FLOOR DRAIN PIPING INCLUDING ALL FITTINGS, CONNECT TO DRAIN BOX (#26) (40' L.F.)
30	1	2'X4' PRECAST BOX WITH GRATE (OLD CASTLE OR EQ.); 5'-6" DEEP
31	1	12" PVC SDR 35 ASTM D3034 GRAVITY PIPE TO DRAIN (9'-2" LG)
32	4	FLOOR SLEEVE (SEE DETAIL C/D.102)
33	1	CONSTRUCT HOUSEKEEPING PADS FOR ELECTRICL EQUPMENT. ALL ELECTRICAL EQUIPMENT TO BE FURNISHED AND INSTALLED BY OTHERS. COORDINATE LOCATION WITH ELECTRICAL. (SEE DETAIL A/P.101)
34	1	4" FLG'D. C.L. 150 D.I. PIPE RESILIENT WEDGE GATE VALVE MUELLER W/ AUTOMATIC OPERATOR

GILSON ENGINEERING
Consulting Engineers & Surveyors
1240 SOUTH 450 EAST BUILDING C, UNIT 2, DRAPER, UT 84020
PHONE: (801) 571-9414 FAX: (801) 571-9449

LICENSED PROFESSIONAL ENGINEER
3/31/22
No. 362118
Bradley S. Gilson
STATE OF UTAH

POWDER MOUNTAIN WATER AND SEWER IMPROVEMENT DISTRICT

REVISIONS

REV	DATE	BY	COMMENTS
C	03/01/22	BP	REV SCH PLUMBING #8

1" SCALE MEASURES 1" ON FULL SIZE SHEET
ADJUST FOR HALF SIZE SHEETS

DATE: FEBRUARY 2022
DRAWING NAME: PIPING PLANS
DESIGNED/DRAWN BY: JM/BP
CHECKED: ---
APPROVED: ---

PIPING SECTIONS

TOP OF MOUNTAIN WATER SYSTEM
POWDER MOUNTAIN WATER & SEWER IMPROVEMENT DISTRICT
WEBER COUNTY, UTAH

REVISION: C

PROJ. # POW.019

P.102

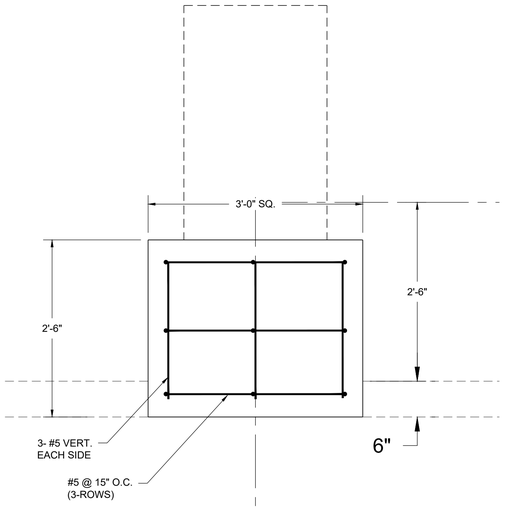

PUMP NO.17 PEDESTAL CONCRETE SECTION (2 / P.101)
SCALE: NTS

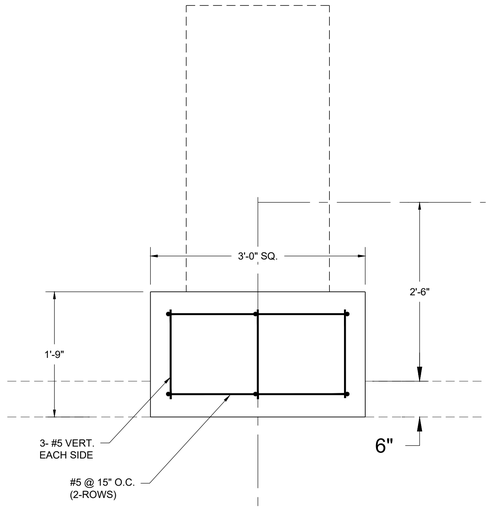

PUMP NO.8 PEDESTAL CONCRETE SECTION (4 / P.101)
SCALE: NTS

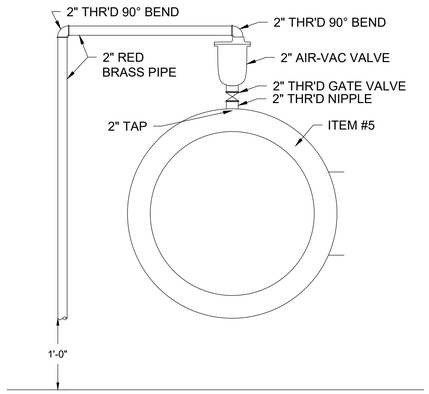

ITEM 19
AIR RELIEF VALVE (5 / P.101)
SCALE: NTS

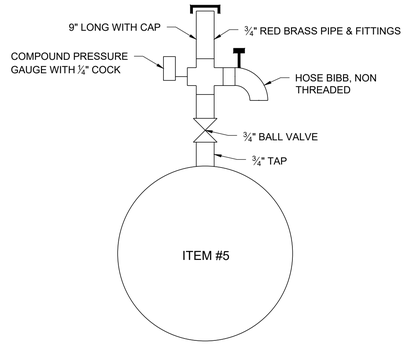

ITEM 18 - PRESSURE
GAUGE ASSEMBLY (6 / P.101)
SCALE: NTS

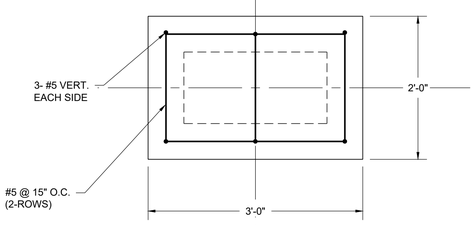

PUMP NO.17 PEDESTAL CONCRETE PLAN (1 / P.101)
SCALE: NTS

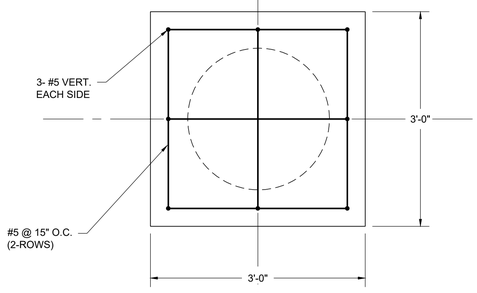

PUMP NO.8 PEDESTAL CONCRETE PLAN (3 / P.101)
SCALE: NTS

NOTES:
1 - VERIFY DIMENSIONS ACCOMMODATE PUMP PROVIDED BY PUMP SUPPLIER.

2- PROVIDE AND INSTALL FASTENERS PER PUMP MANUFACTURER REQUIREMENTS.

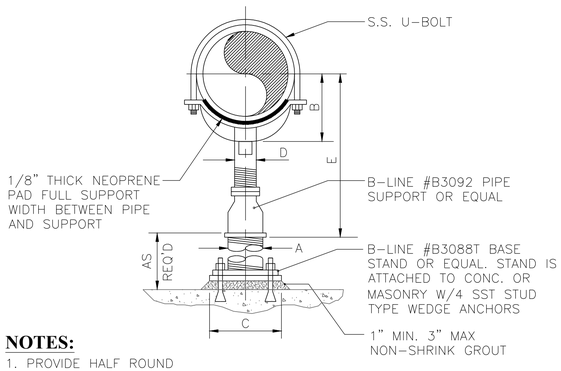

NOTES:

1. PROVIDE HALF ROUND RIGID INSULATION & INSULATION PROTECTION SHIELD, SIMILAR TO GRINNELL FIG.167 OR ELCEN FIG.219 WHEN PIPING IS INSULATED.

2. FOR BASE, HEIGHT, & FLANGE DIMENSIONS, SEE TABLE TO RIGHT. ALL DIMENSIONS IN INCHES.

3. ALL COMPONENTS OF PIPE SUPPORT SHALL BE STAINLESS STEEL.

PIPE SIZE	A	B	C	D	E	
					MIN.	MAX.
2½	2½	3½	9	1½	8	13
3	2½	3¾	9	1½	8¼	13¼
3½	2½	4	9	1½	8½	13½
4	3	4¼	9	2½	9¼	14
5	3	4⅞	9	2½	10	14¾
6	3	5½	9	2½	10½	15¼
8	3	6⅞	9	2½	11¾	16½
10	3	8½	9	2½	13½	18¼
12	3	9 15/16	9	2½	15	19¾
14	4	10 15/16	11	3	16¼	20¾
16	4	12⅜	11	3	17¾	22¼
18	6	13⅞	13½	3½	19½	24
20	6	15⅜	13½	3½	21	25½
24	6	17 15/16	13½	4	23¾	28¼

PIPE SUPPORT DETAIL (7 / C.103)
SCALE: NTS

GILSON ENGINEERING
Consulting Engineers & Surveyors
1240 SOUTH 450 EAST BUILDING C, UNIT 2, DRAPER, UT 84020
PHONE: (801) 571-9414 FAX: (801) 571-9449

LICENSED PROFESSIONAL ENGINEER
03/18/2022
No. 362118
Bradley S. Gilson
STATE OF UTAH

POWDER MOUNTAIN WATER AND SEWER IMPROVEMENT DISTRICT

REV	DATE	BY	COMMENTS

REVISIONS

1" SCALE MEASURES 1" ON FULL SIZE SHEET
ADJUST FOR HALF SIZE SHEETS

DATE: FEBRUARY 2022
DRAWING NAME: P.101 PIPING DETAILS
DESIGNED/DRAWN BY: JM/BP
CHECKED: ---
APPROVED: ---

PIPING DETAILS

TOP OF MOUNTAIN WATER SYSTEM
POWDER MOUNTAIN WATER & SEWER IMPROVEMENT DISTRICT
WEBER COUNTY, UTAH

REVISION: A
PROJ. # POW.019

P.103

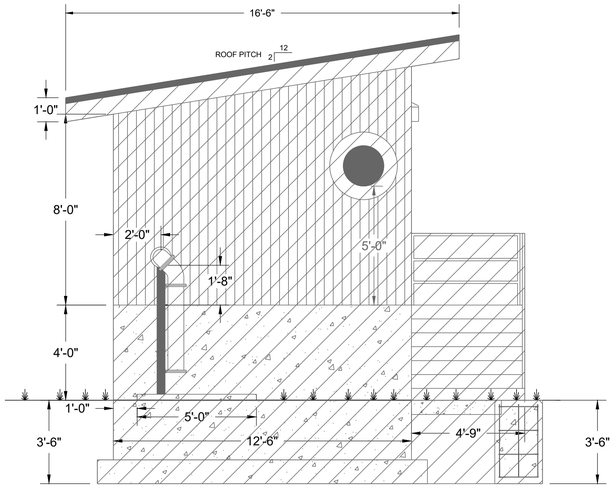

EXISTING PUMPHOUSE SIDE ELEVATION (1 / S.101)
SCALE: 1" = 3'

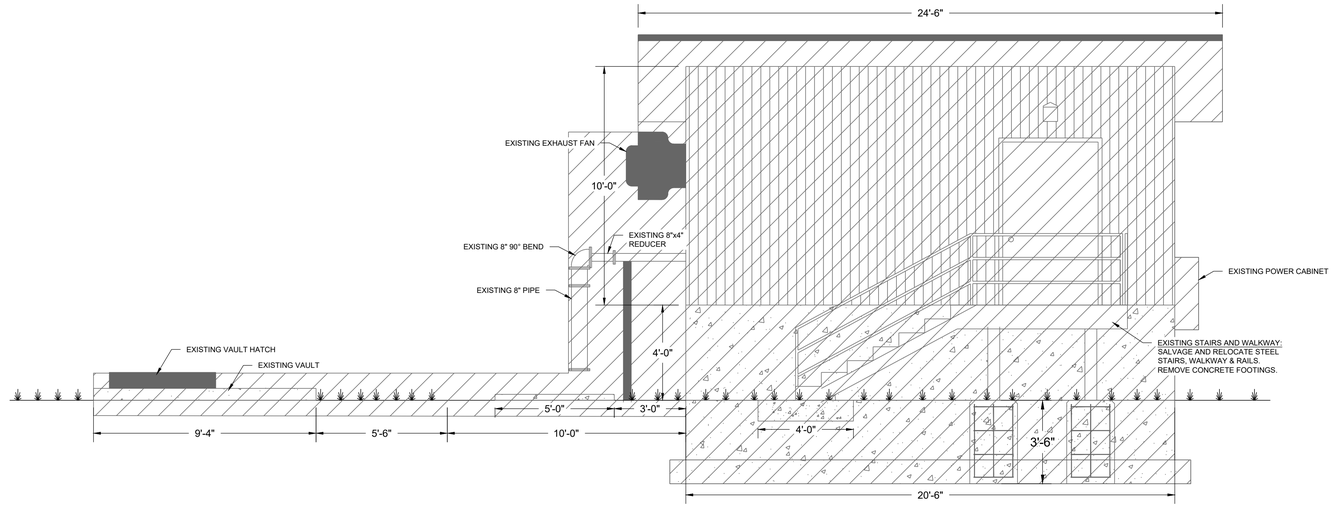

EXISTING PUMPHOUSE FRONT ELEVATION (2 / S.101)
SCALE: 1" = 3'

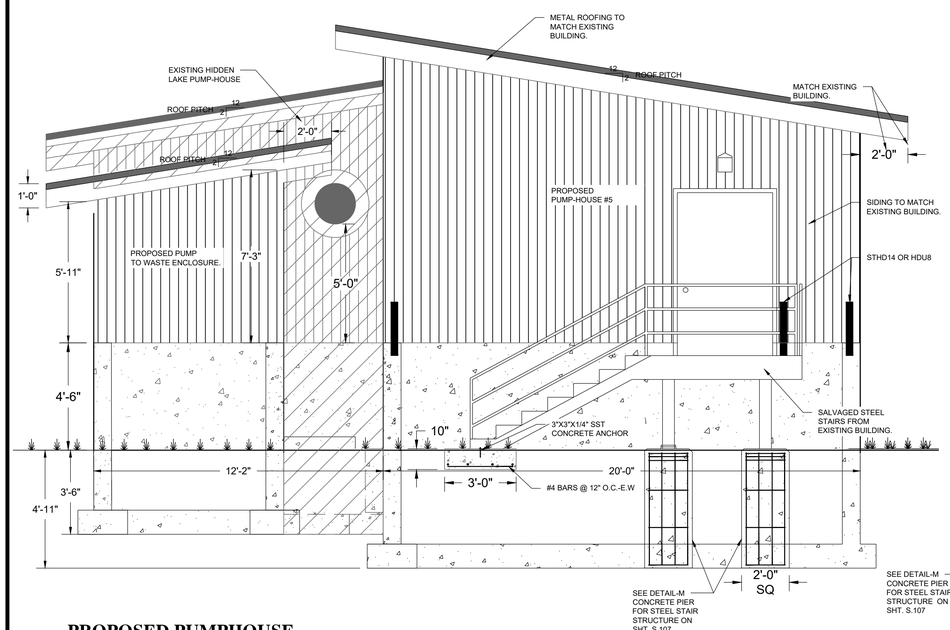

PROPOSED PUMPHOUSE SIDE ELEVATION (3 / S.101)
SCALE: 1" = 3'

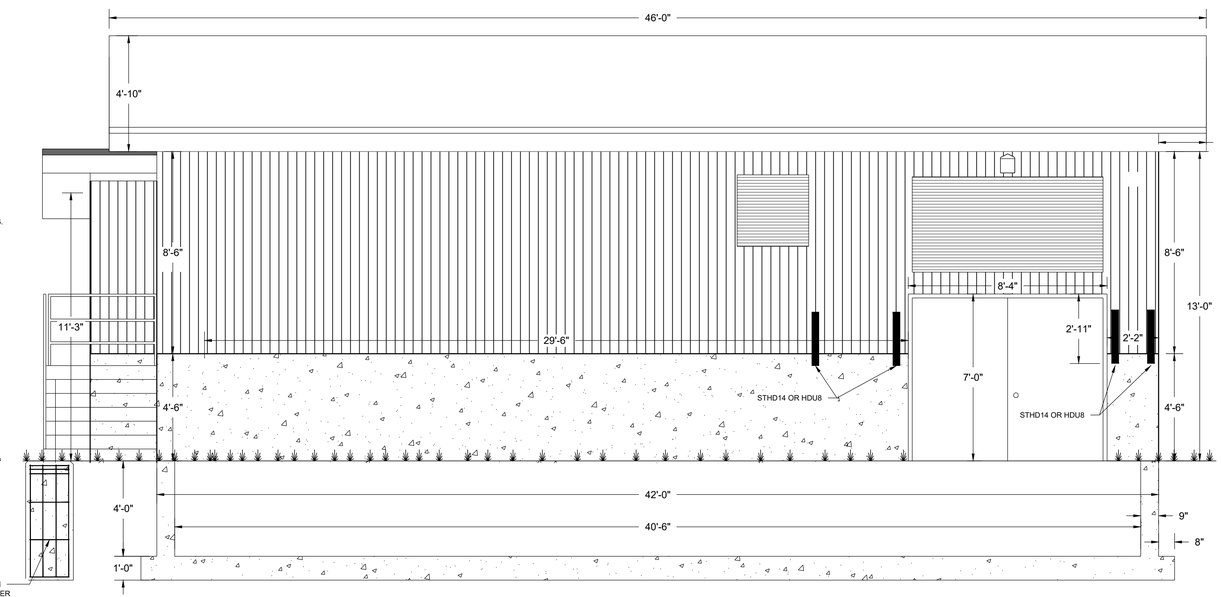

PROPOSED PUMPHOUSE FRONT ELEVATION (4 / S.101)
SCALE: 1" = 3'

GILSON ENGINEERING
Consulting Engineers & Surveyors
1240 SOUTH 450 EAST BUILDING C, UNIT 2, DRAPER, UT 84020
PHONE: (801) 571-9414 FAX: (801) 571-9449

PROFESSIONAL STRUCTURAL ENGINEER
03/18/2022
No. 362118
Bradley S. Gilson
STATE OF UTAH

POWDER MOUNTAIN WATER AND SEWER IMPROVEMENT DISTRICT

REV DATE	BY	COMMENTS

REVISIONS

1" SCALE MEASURES 1" ON FULL SIZE SHEET
ADJUST FOR HALF SIZE SHEETS

DATE: FEBRUARY 2022
DRAWING NAME: EXISTING & PROPOSED STATION ELEVATION
DESIGNED/DRAWN BY: JM/BP
CHECKED: ---
APPROVED: ---

EXISTING & PROPOSED BOOSTER STATION ELEVATION

TOP OF MOUNTAIN WATER SYSTEM
POWDER MOUNTAIN WATER & SEWER IMPROVEMENT DISTRICT
WEBER COUNTY, UTAH

REVISION: A
PROJ. # POW.019

S.101

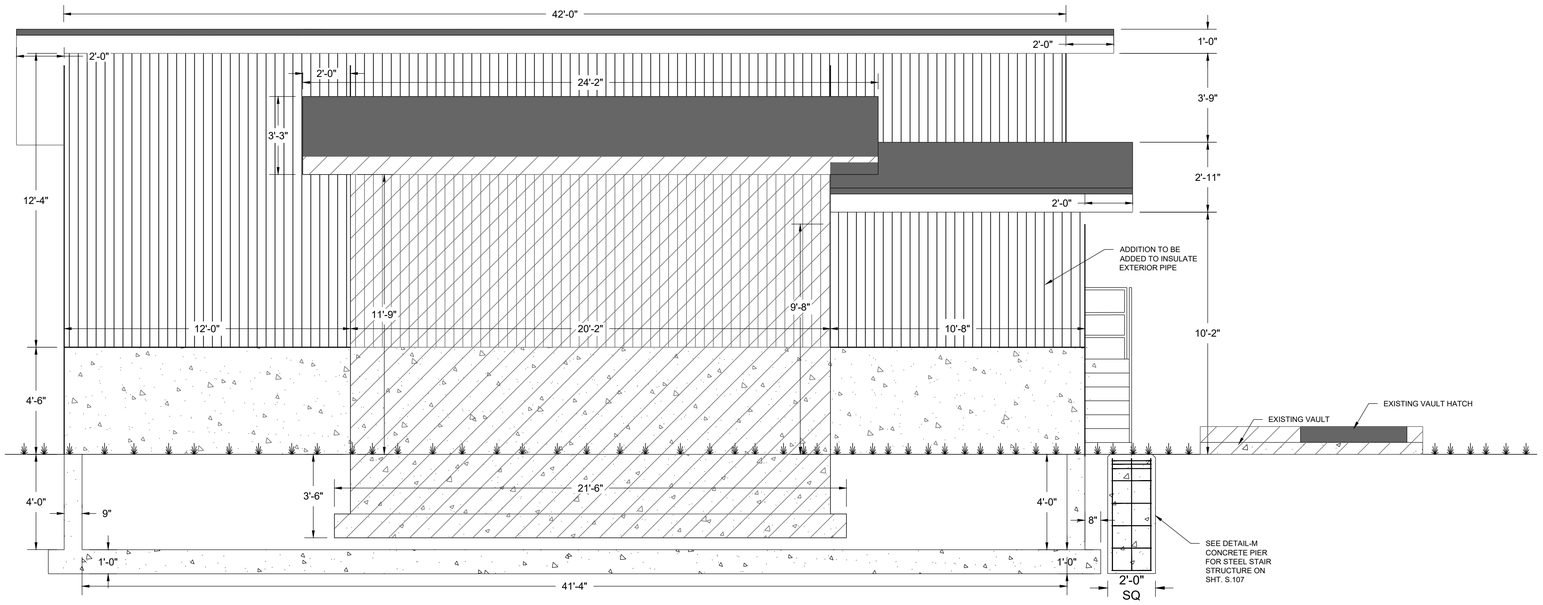

PROPOSED PUMPHOUSE REAR ELEVATION (1 / S.102)

SCALE: 1" = 3'

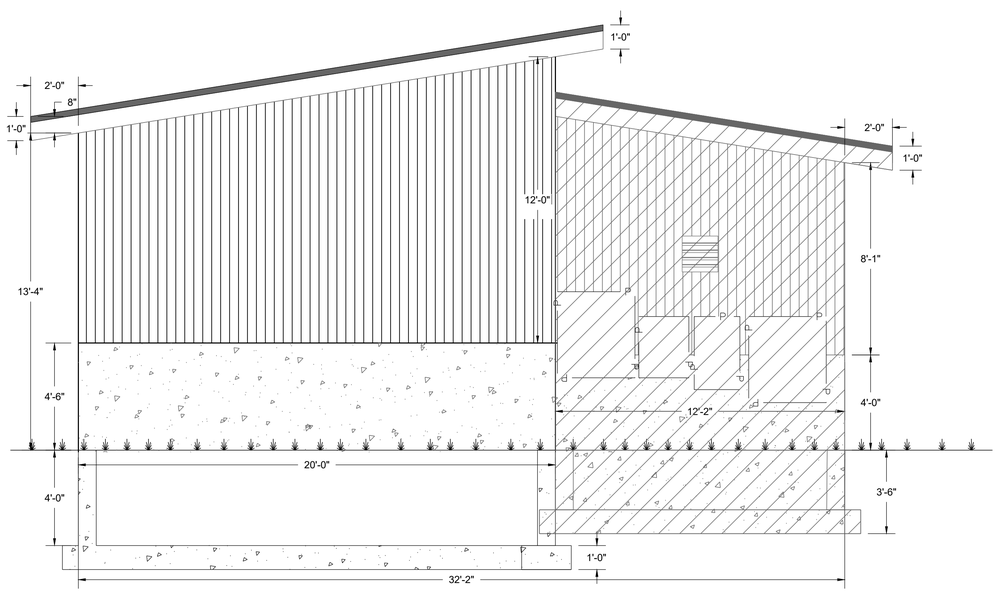

PROPOSED PUMPHOUSE SIDE ELEVATION (2 / S.102)

SCALE: 1" = 3'

GILSON ENGINEERING
Consulting Engineers & Surveyors
1240 SOUTH 450 EAST BUILDING C, UNIT 2, DRAPER, UT 84020
PHONE: (801) 571-9414 FAX: (801) 571-9449

PROFESSIONAL STRUCTURAL ENGINEER
03/18/2022
No. 362118
Bradley S. Gilson
STATE OF UTAH

POWDER MOUNTAIN WATER AND SEWER IMPROVEMENT DISTRICT

REV	DATE	BY	COMMENTS

REVISIONS

1" SCALE MEASURES 1" ON FULL SIZE SHEET
ADJUST FOR HALF SIZE SHEETS

DATE: FEBRUARY 2022
DRAWING NAME: S.102 PROPOSED SYSTEM ELEVATION
DESIGNED/DRAWN BY: JM/BP
CHECKED: ---
APPROVED: ---

PROPOSED BOOSTER STATION ELEVATION

TOP OF MOUNTAIN WATER SYSTEM
POWDER MOUNTAIN WATER & SEWER IMPROVEMENT DISTRICT
WEBER COUNTY, UTAH

REVISION: A

PROJ. # POW.019

S.102

FOOTING SCHEDULE:

MARK	SIZE			REBAR	REMARKS
	WIDTH	THICK	LENGTH		
FC-24	24"	12"	CONT.	(3) #4 BARS CONTINUOUS	1, 2, 3
FC-36	36"	12"	CONT.	(3) #5 BARS CONTINUOUS	1, 2, 3

1. 2500 PSI CONCRETE.
2. GRADE 60 STEEL.
3. INTERIOR CONTINUOUS FOOTINGS ARE OKAY TO BE THICKENED SLAB FOOTINGS.
4. SPOT FOOTING MUST BE THE THICKNESS LISTED + SLAB THICKNESS ON TOP.
5. SEE DETAIL A ON SHEET S.107.

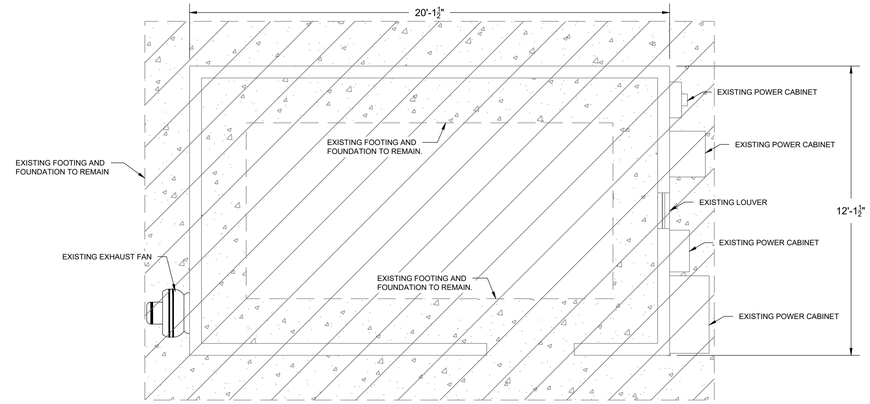

EXISTING PUMPHOUSE FOOTING PLAN VIEW (1 / S.102)
SCALE: 1" = 3'

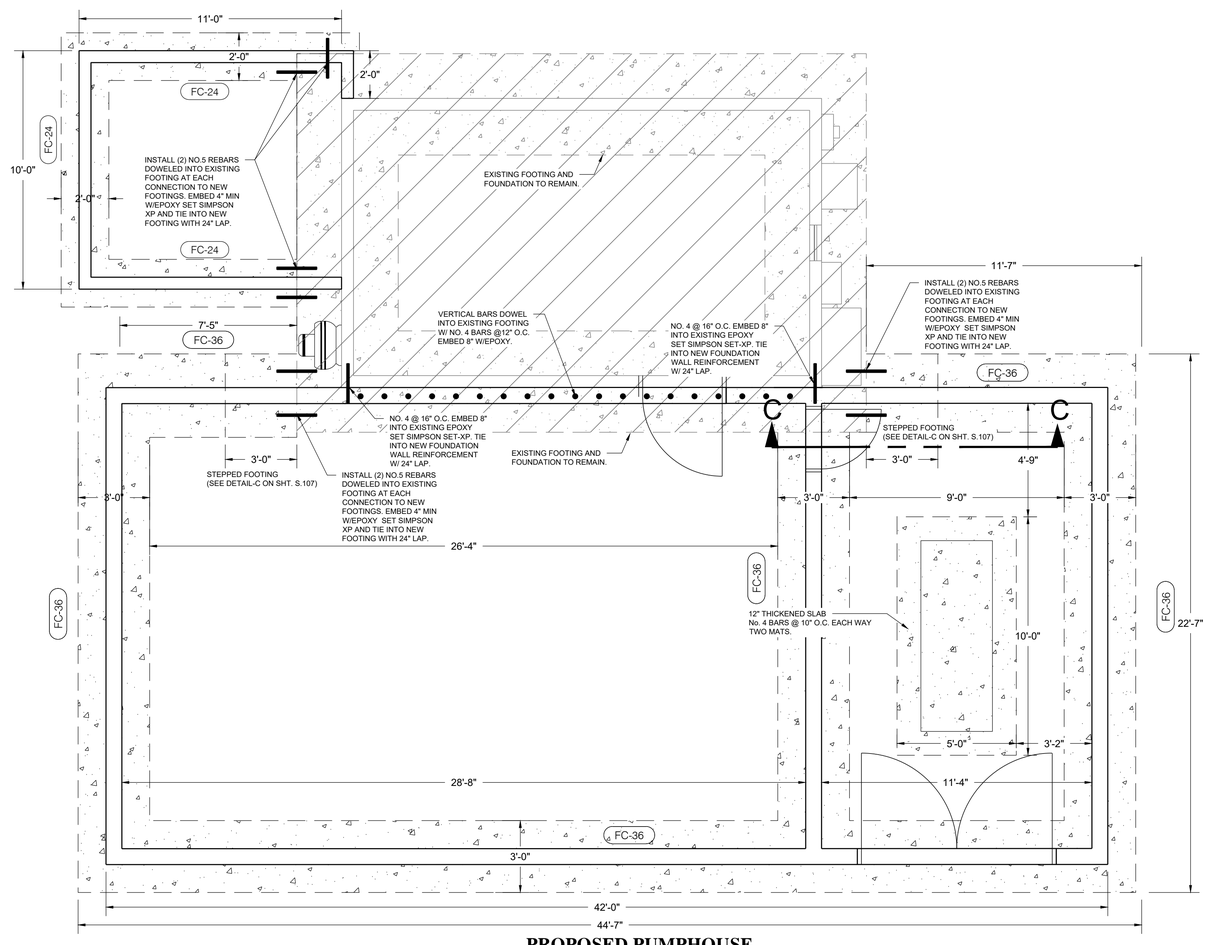

PROPOSED PUMPHOUSE FOOTING PLAN VIEW (2 / S.103)
SCALE: 1" = 3'

GILSON ENGINEERING
Consulting Engineers & Surveyors
1240 SOUTH 450 EAST BUILDING C, UNIT 2, DRAPER, UT 84020
PHONE: (801) 571-9414 • FAX: (801) 571-9449

PROFESSIONAL STRUCTURAL ENGINEER
03/18/2022
No. 362118
Bradley S. Gilson
STATE OF UTAH

POWDER MOUNTAIN WATER AND SEWER IMimprovement DISTRICT

REV	DATE	BY	COMMENTS

REVISIONS

1" SCALE MEASURES 1" ON FULL SIZE SHEET
ADJUST FOR HALF SIZE SHEETS

DATE: FEBRUARY 2022
DRAWING NAME: EXISTING & PROPOSED STATION FOOTING PLAN
DESIGNED/DRAWN BY: JM/BP
CHECKED: ---
APPROVED: ---

EXISTING & PROPOSED BOOSTER STATION FOOTING PLAN

TOP OF MOUNTAIN WATER SYSTEM
POWDER MOUNTAIN WATER & SEWER IMPROVEMENT DISTRICT
WEBER COUNTY, UTAH

REVISION: A

PROJ. # POW.019

S.103

ALL EXTERIOR WALLS TO BE 6 UNLESS OTHERWISE NOTED

INDICATES INTERIOR SHEARWALL

SHEARWALL SCHEDULE

8d NAILS TO BE 2 1/2" LONG (MINIMUM)

MARK	SIZE	TYPE	GRADE	NAILING		REMARKS
				EDGE	FIELD	
3	7/16"	CDX OR O.S.B.	APA RATED C-C , C-D	8d @ 3" O.C.	8d @ 12" O.C.	1, 2, 3
4	7/16"	CDX OR O.S.B.	APA RATED C-C , C-D	8d @ 4" O.C.	8d @ 12" O.C.	1, 2, 3
6	7/16"	CDX OR O.S.B.	APA RATED C-C , C-D	8d @ 6" O.C.	8d @ 12" O.C.	1, 2, 3

1. USE COMMON OR GALVANIZED BOX NAILS.
2. BLOCK ALL EDGES.

▲ A SIMPSON STHD14(RJ) HOLDOWN STRAPS. USE (RJ) MODEL WHERE STRAP OVERLAPS A FLOOR RIM JOIST. OR HDU-11 WITH 1" WEDGE ANCHOR BOLT WITH 10" EMBED SET EPOXY.

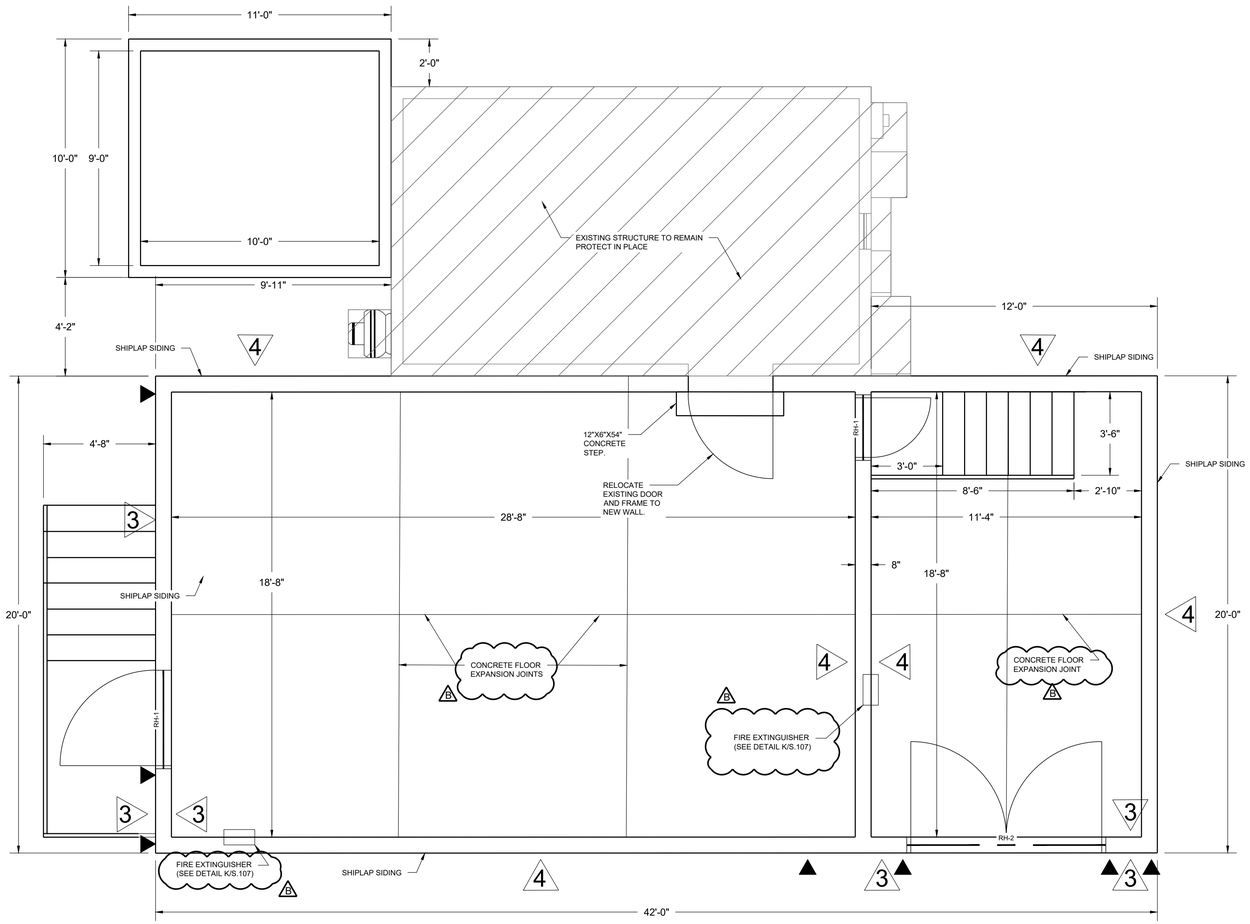

PROPOSED PUMPHOUSE FLOORING PLAN VIEW

SCALE: 1" = 3'

1 / S.104

GILSON ENGINEERING
Consulting Engineers & Surveyors
1240 SOUTH 450 EAST BUILDING C, UNIT 2, DRAPER, UT 84020
PHONE: (801) 571-9414 FAX: (801) 571-9449

PROFESSIONAL STRUCTURAL ENGINEER
03/28/2022
No. 362118
Bradley S. Gilson
STATE OF UTAH

POWDER MOUNTAIN WATER AND SEWER IMPROVEMENT DISTRICT

REVISIONS

REV	DATE	BY	COMMENTS
B	03/28/22	JM	ADD FIRE EXTINGUISHERS & JOINT NOTES

1" SCALE MEASURES 1" ON FULL SIZE SHEET
ADJUST FOR HALF SIZE SHEETS

DATE: FEBRUARY 2022
DRAWING NAME: S.104 FLOORING PLAN
DESIGNED/DRAWN BY: JM/BP
CHECKED: ---
APPROVED: ---

PROPOSED BOOSTER STATION FLOORING PLAN

TOP OF MOUNTAIN WATER SYSTEM
POWDER MOUNTAIN WATER & SEWER IMPROVEMENT DISTRICT
WEBER COUNTY, UTAH

REVISION: B

PROJ. # POW.019

S.104

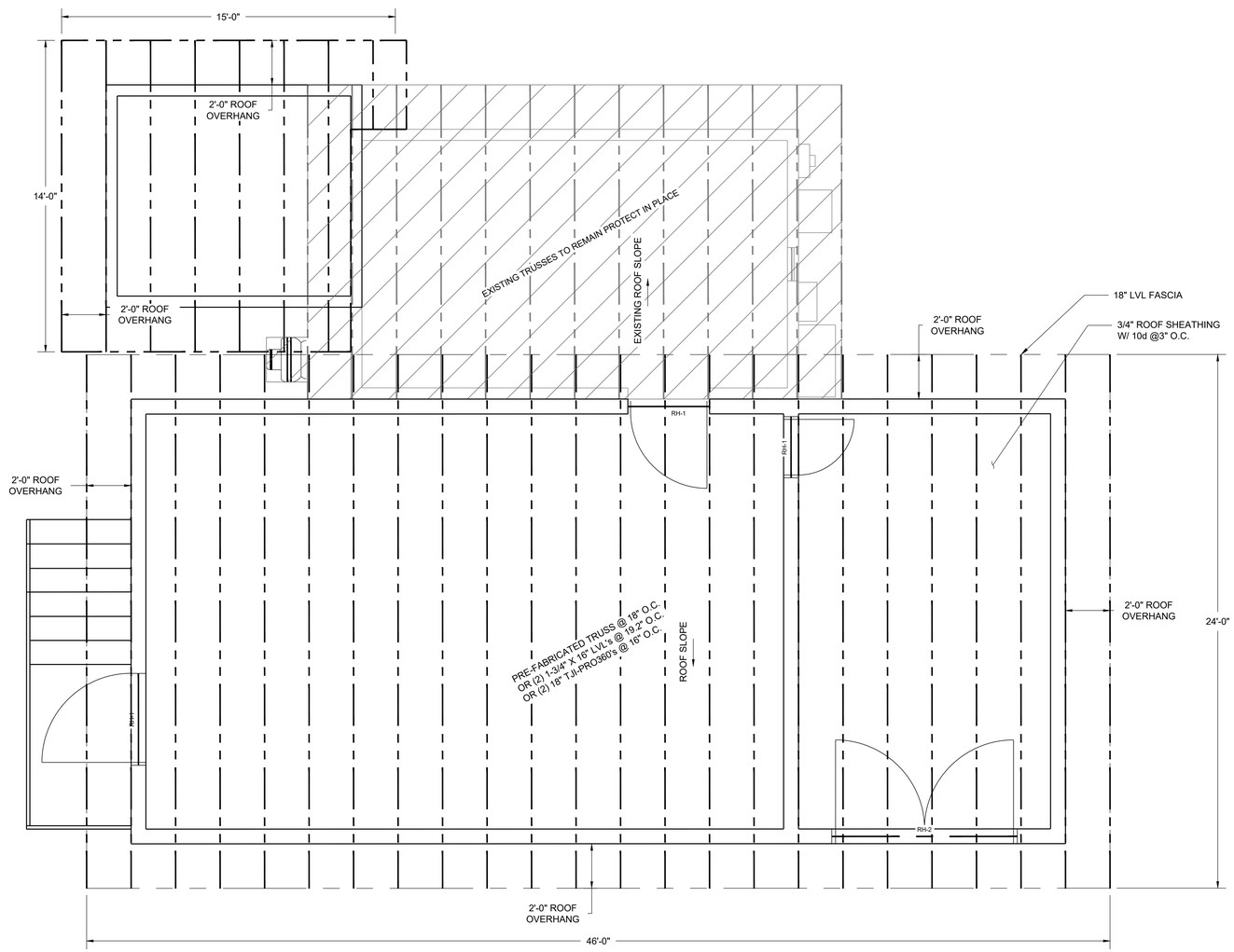

PROPOSED PUMPHOUSE ROOFING PLAN VIEW (1 / S.105)

SCALE: 1" = 3'

ROOF HEADER SCHEDULE:

MARK	BEAM TYPE & SIZE	TRIMMERS (DF #2)
RH-1	(2) 2X10 DF. NO.2	(2) 2X6's TRIMMERS
RH-2	(2) 1¾" x 9½" LVL's	(3) 2X6's TRIMMERS

** NAIL (1) 2x6 KING STUD IN ADDITION TO THE TRIMMERS SPECIFIED IN PARENTHESIS ABOVE W/ 16d COMMON @ 4" O.C.

GILSON ENGINEERING
Consulting Engineers & Surveyors
1240 SOUTH 450 EAST BUILDING C, UNIT 2, DRAPER, UT 84020
PHONE: (801) 571-9414 FAX: (801) 571-9449

PROFESSIONAL STRUCTURAL ENGINEER
03/18/2022
No. 362118
Bradley S. Gilson
STATE OF UTAH

POWDER MOUNTAIN WATER AND SEWER IMPROVEMENT DISTRICT

REV	DATE	BY	COMMENTS

REVISIONS

1" SCALE MEASURES 1" ON FULL SIZE SHEET
ADJUST FOR HALF SIZE SHEETS

DATE: FEBRUARY 2022
DRAWING NAME: S.105 BOOSTER STATION ROOFING PLAN
DESIGNED/DRAWN BY: JM/BP
CHECKED: ---
APPROVED: ---

PROPOSED BOOSTER STATION ROOFING PLAN

TOP OF MOUNTAIN WATER SYSTEM
POWDER MOUNTAIN WATER & SEWER IMPROVEMENT DISTRICT
WEBER COUNTY, UTAH

REVISION: A

PROJ. # POW.019

S.105

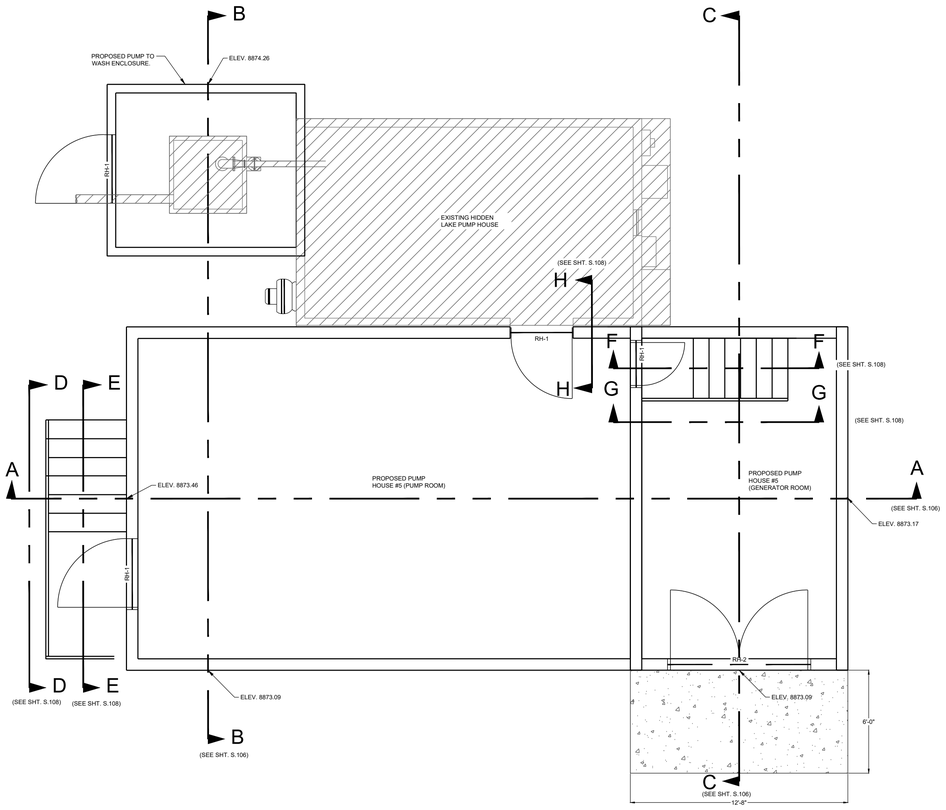

PROPOSED PUMPHOUSE STRUCTURAL SECTION(S) 1 / S.106

SCALE: 1" = 50'

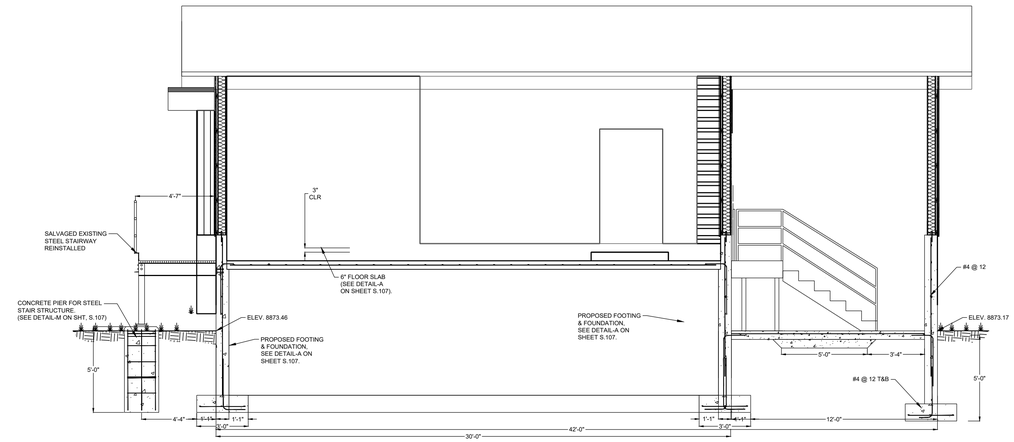

PROPOSED PUMPHOUSE SECTION-A DETAIL 2 / S.102

SCALE: 1" = 50'

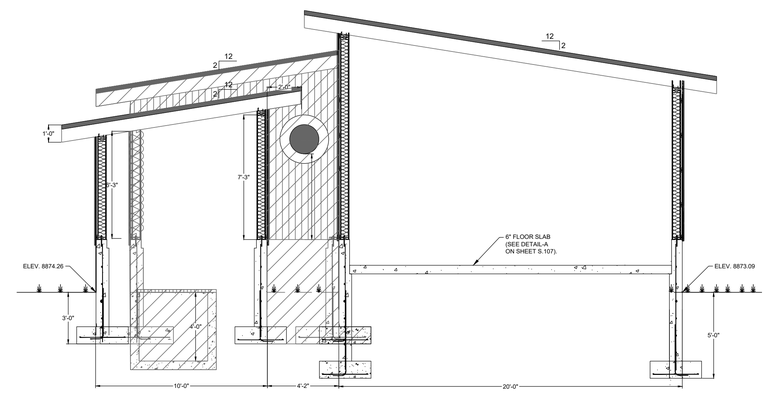

PROPOSED PUMPHOUSE SECTION-B DETAIL 3 / S.106

SCALE: 1" = 50'

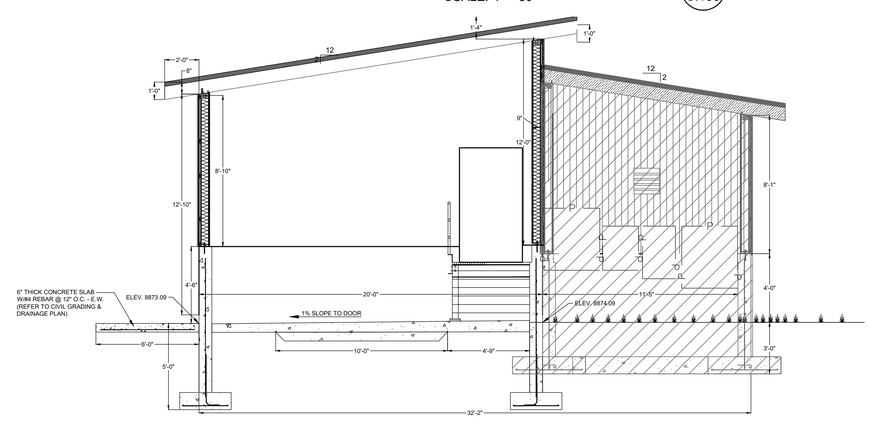

PROPOSED PUMPHOUSE SECTION-C DETAIL 4 / S.106

SCALE: 1" = 50'

GILSON ENGINEERING
Consulting Engineers & Surveyors
1240 SOUTH 450 EAST BUILDING C, UNIT 2, DRAPER, UT 84020
PHONE: (801) 571-9414 FAX: (801) 571-9449

PROFESSIONAL STRUCTURAL ENGINEER
03/18/2022
No. 362118
Bradley S. Gilson
STATE OF UTAH

POWDER MOUNTAIN WATER AND SEWER IMPROVEMENT DISTRICT

REV	DATE	BY	COMMENTS

REVISIONS

1" SCALE MEASURES 1" ON FULL SIZE SHEET
ADJUST FOR HALF SIZE SHEETS

DATE: FEBRUARY 2022
DRAWING NAME: STRUCTURAL DETAILS
DESIGNED/DRAWN BY: JM/BP
CHECKED: ---
APPROVED: ---

STRUCTURAL SECTION DETAILS

TOP OF MOUNTAIN WATER SYSTEM
POWDER MOUNTAIN WATER & SEWER IMPROVEMENT DISTRICT
WEBER COUNTY, UTAH

REVISION: A

PROJ. # POW.019

S.106

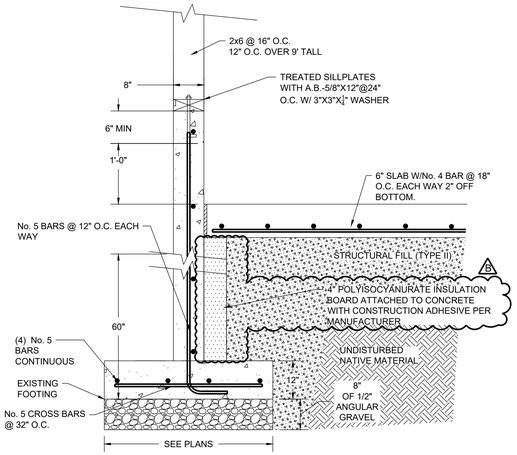

A S.107 PUMP ROOM PROPOSED FOOTING DETAIL
SCALE: N/A

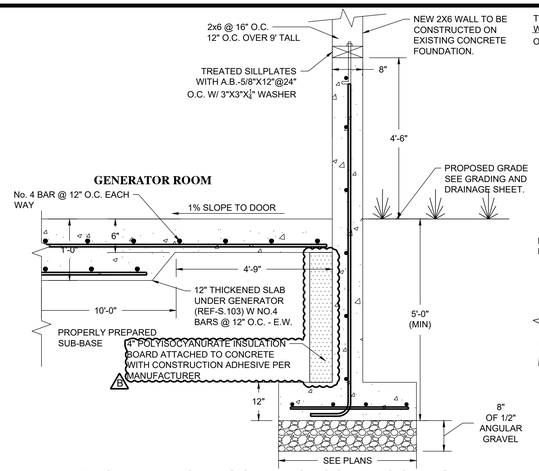

B S.107 GENERATOR ROOM PROPOSED FOOTING
SCALE: N/A

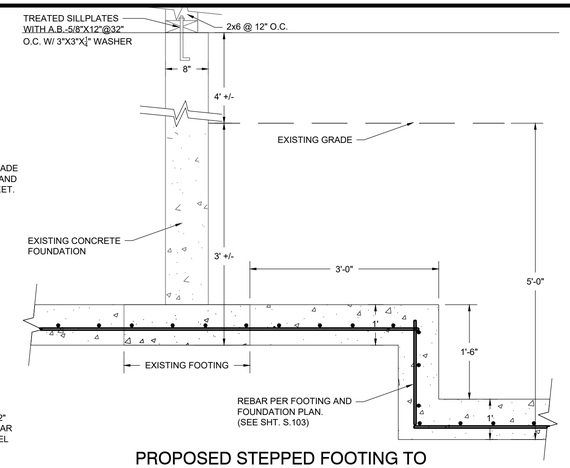

C S.107 PROPOSED STEPPED FOOTING TO EXISTING FOOTING CONNECTION DETAIL
SCALE: N/A

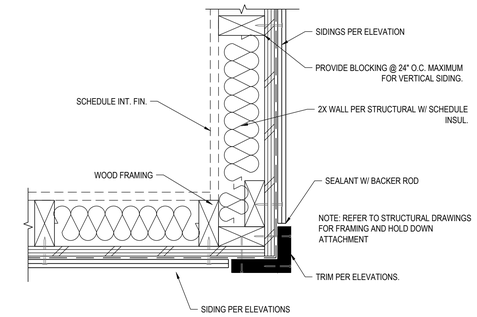

D S.107 CORNER DETAIL
SCALE: N/A

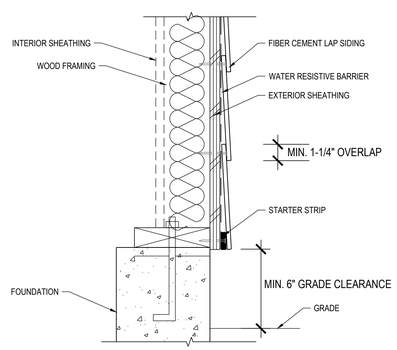

E S.107 FIBER CEMENT GRADE CLEARANCE
SCALE: N/A

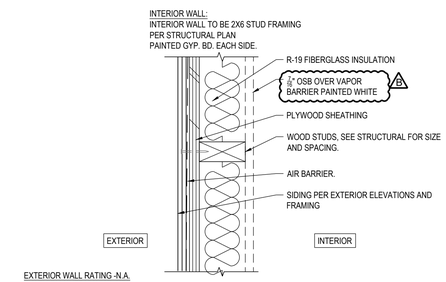

EXTERIOR WALL RATING -N.A.

1. WOOD STUDS - NOM. 2X6 INCH SPACED 16 INCHES O.C. WITH TWO 2X6 TOP AND ONE 2X6 INCH BOTTOM PLATES. STUDS LATERALLY BRACED EFFECTIVELY FIRE STOPPED AT THE TOP AND BOTTOM OF WALL.

2. BATTS AND BLANKETS - MINERAL FIBRE OR GLASS FIBER INSULATION, 5-1/2" THICK. MINERAL FIBER INSULATION TO BE UN-FACED AND HAVE A MIN DENSITY OF 3 PCF. GLASS FIBER INSULATION TO BE FACED AND HAVE A MINIMUM DENSITY OF 0.9 PCF.

3. 7/16" OSB OVER VAPOR BARRIER PAINTED WHITE (B)

4. WOOD STRUCTURAL SHEATHING - 4ft WIDE WOOD STRUCTURAL PANELS. INSTALLED WITH LONG DIMENSION OF SHEET OF FACE GRAIN OF PLYWOOD. PARALLEL WITH OR PERPENDICULAR TO STUDS. VERTICAL JOINTS CENTERED ON STUDS. HORIZONTAL JOINTS BACKED WITH NOM 2X4 INCH WOOD BLOCKING.

5. EXTERIOR WALL FACING: INSTALLED IN ACCORDANCE WITH THE IN ACCORDANCE WITH THE MANUFACTURES INSTALLATION INSTRUCTIONS

F S.107 TYPICAL WALL DETAIL
SCALE: N/A

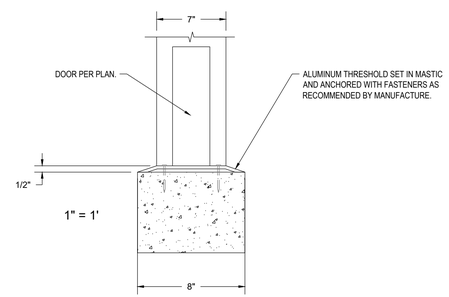

G S.107 THRESHOLD DETAIL
SCALE: N/A

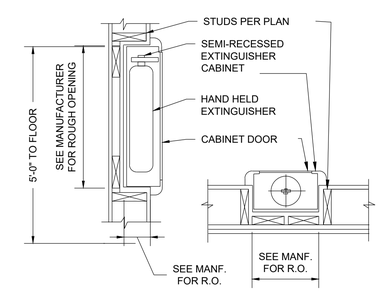

NOTE:
COORDINATE MODEL WITH DEPTH OF STUDS
FIRE EXTINGUISHER NFPA 10.

K S.107 RECESSED FIRE EXTINGUISHER
SCALE: N/A

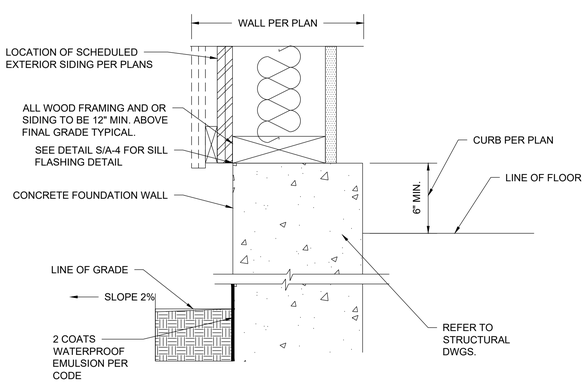

H S.107 TOP OF FOUNDATION
SCALE: N/A

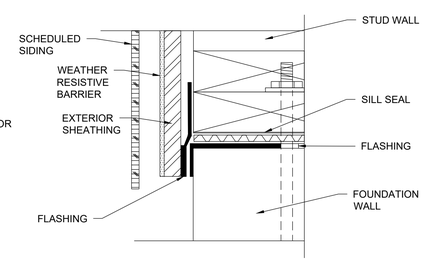

* INSTALL FLASHING IN ORDER AS SHOWN BY NUMBERS
** INSTALL FLASHING AND WEATHER RESISTIVE BARRIER TO FORM WATER SHEDDING LAPS

J S.107 SELF ADHERED FLASHING @ SILL
SCALE: N/A

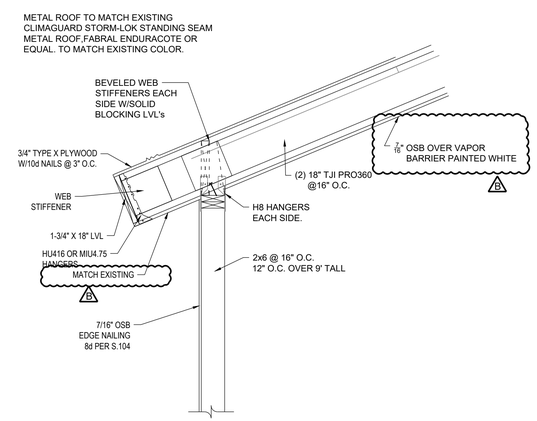

L S.107 ROOF / SOFFIT / FASCIA / BLOCKING DETAIL
SCALE: N/A

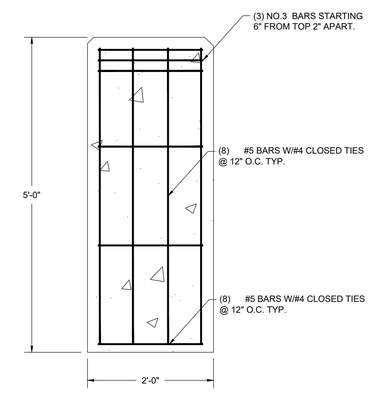

M S.107 CONCRETE PIERS FOR STEEL STAIR STRUCTURE
SCALE: N/A

GILSON ENGINEERING
Consulting Engineers & Surveyors
1340 SOUTH 450 EAST BUILDING C, UNIT 2, DRAPER, UT 84020
PHONE: (801) 571-9414 FAX: (801) 571-9449

PROFESSIONAL STRUCTURAL ENGINEER
03/28/2022
No. 362118
Bradley S. Gilson
STATE OF UTAH

POWDER MOUNTAIN WATER AND SEWER IMPROVEMENT DISTRICT

REVISIONS:

REV	DATE	BY	COMMENTS
B	03/28/22	JM	ADD INSULATION & CHANGE SHEETROCK TO OSB

1" SCALE MEASURES 1" ON FULL SIZE SHEET
ADJUST FOR HALF SIZE SHEETS

DATE: FEBRUARY 2022
DRAWING NAME: PROPOSED BOOSTER STATION STRUCTURAL DETAILS
DESIGNED/DRAWN BY: JM/BP
CHECKED: ---
APPROVED: ---

PROPOSED BOOSTER STATION STRUCTURAL DETAILS

TOP OF MOUNTAIN WATER SYSTEM
POWDER MOUNTAIN WATER & SEWER IMPROVEMENT DISTRICT
WEBER COUNTY, UTAH

REVISION: B
PROJ. # POW.019

S.107

EXISTING EXTERIOR STEEL STEPS SALVAGE AND RELOCATE PER PLAN.

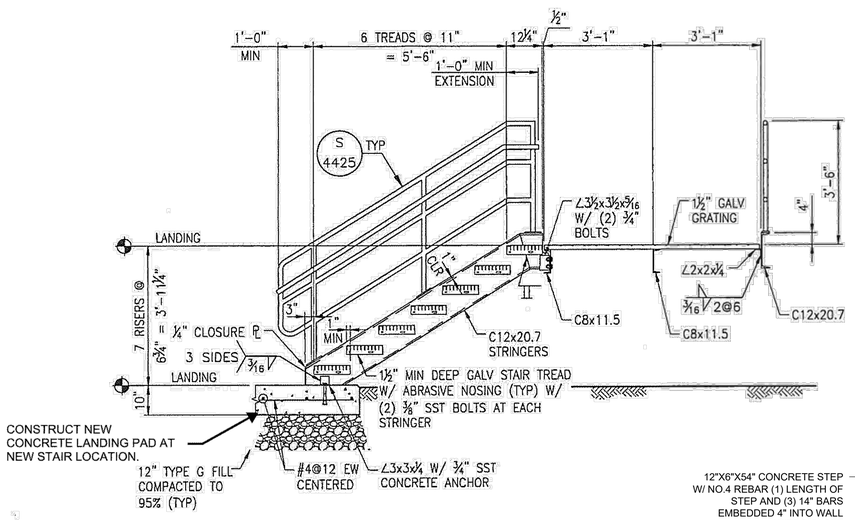

E S.106 SECTION
SCALE: N/A

INTERIOR STEEL STEPS SEE SHT. S.106 FOR PLACEMENT PER PLAN.

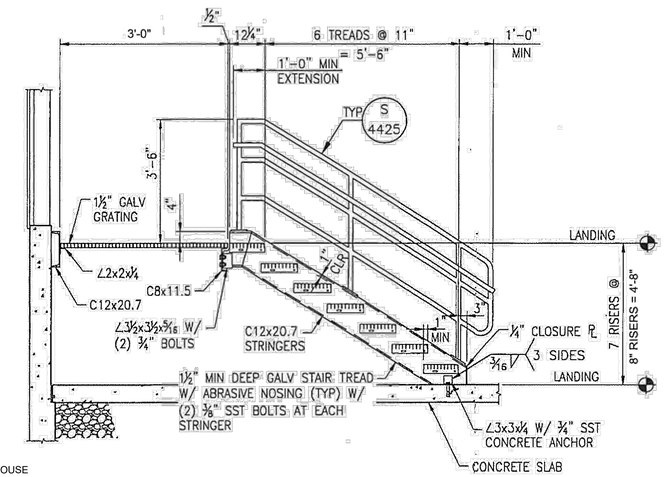

F S.106 SECTION
SCALE: N/A

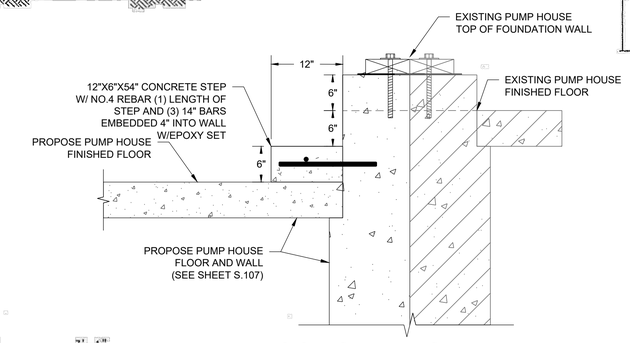

H S.106 CONCRETE STEP DETAIL
NO SCALE

EXISTING EXTERIOR STEEL STEPS SALVAGE AND RELOCATE PER PLAN.

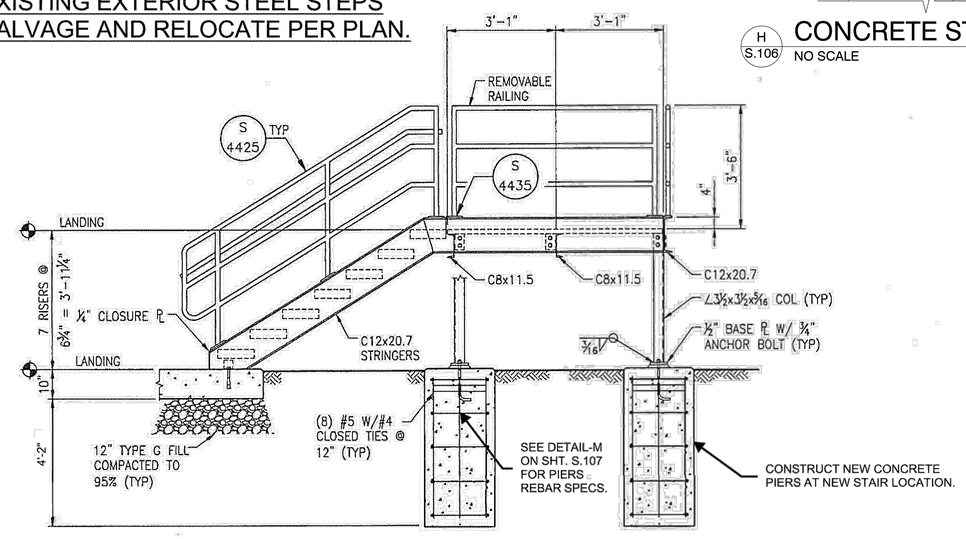

D S.106 SECTION
SCALE: N/A

INTERIOR STEEL STEPS SEE SHT. S.106 FOR PLACEMENT PER PLAN.

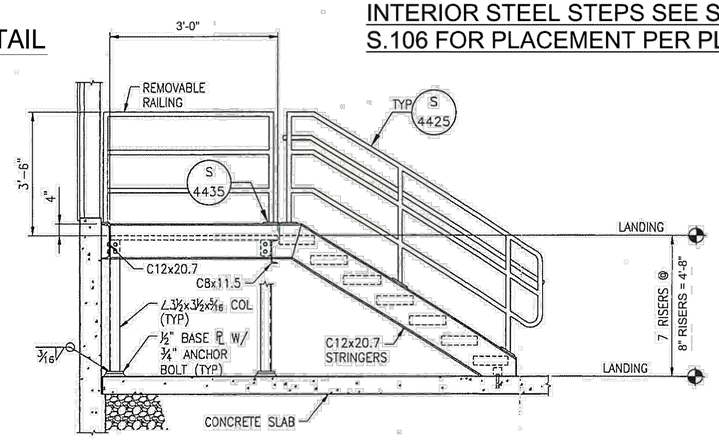

G S.106 SECTION
SCALE: N/A

C:\Users\ChrisPatten\OneDrive – Matix Corporation\700 – Projects\10037 Bloomington Well House\3-Engineering\3.4-Drawings\dwg\347-17-01 S-06.dwg Plotted: 6/4/2018 11:45 AM By: Chris Patten

MATIX
Matix Corporation
Salt Lake City, UT
Phone: (385) 226-5966

GILSON ENGINEERING
Consulting Engineers & Surveyors
1340 SOUTH 450 EAST BUILDING C, UNIT 2, DRAPER, UT 84020
PHONE: (801) 571-9414 FAX: (801) 571-9449

PROFESSIONAL STRUCTURAL ENGINEER
03/18/2022
No. 362118
Bradley S. Gilson
STATE OF UTAH

POWDER MOUNTAIN WATER AND SEWER IMPROVEMENT DISTRICT

REV	DATE	BY	COMMENTS

REVISIONS

1" SCALE MEASURES 1" ON FULL SIZE SHEET
ADJUST FOR HALF SIZE SHEETS

DATE: FEBRUARY 2022
DRAWING NAME: PROPOSED BOOSTER STATION STRUCTURAL DETAILS
DESIGNED/DRAWN BY: JM/BP
CHECKED: ---
APPROVED: ---

PROPOSED BOOSTER STATION STRUCTURAL DETAILS

TOP OF MOUNTAIN WATER SYSTEM
POWDER MOUNTAIN WATER & SEWER IMPROVEMENT DISTRICT
WEBER COUNTY, UTAH

REVISION: A
PROJ. # POW.019

S.108

EROSION CONTROL NOTES

1. AT ALL TIMES DURING CONSTRUCTION, THE CONTRACTOR SHALL BE RESPONSIBLE FOR PREVENTING AND CONTROLLING EROSION DUE TO WIND AND RUNOFF. THE CONTRACTOR SHALL ALSO BE RESPONSIBLE FOR MAINTAINING THE EROSION CONTROL FACILITIES SHOWN ON THE PLAN.

2. CONTRACTOR SHALL BE RESPONSIBLE FOR CLEANING DRAINAGE AND EROSION CONTROL FACILITIES AS REQUIRED. STREETS SHALL BE KEPT CLEAN OF DEBRIS FROM TRAFFIC FROM THE SITE.

3. CONTRACTOR SHALL USE VEHICLE TRACKING CONTROL AT ALL LOCATIONS WHERE VEHICLES WILL ENTER OR EXIT THE SITE. CONTROL FACILITIES WILL BE MAINTAINED WHILE CONSTRUCTION IS IN PROGRESS, MOVED WHEN NECESSARY, AND REMOVED WHEN THE SITE IS PAVED.

4. INLET PROTECTION DEVICES SHALL BE INSTALLED IMMEDIATELY UPON INDIVIDUAL INLETS BECOMING FUNCTIONAL.

5. ALL CONTRACTORS AND SUBCONTRACTORS INVOLVED WITH STORM WATER POLLUTION PREVENTION SHALL OBTAIN A COPY OF THE STORM WATER MANAGEMENT PLAN AND THE STATE OF UTAH DISCHARGE PERMIT SYSTEM. GENERAL PERMIT FOR "STORM DISCHARGES ASSOCIATED WITH CONSTRUCTION ACTIVITY" AND BECOME FAMILIAR WITH THEIR CONTENT.

6. ALL WASH WATER (CONCRETE TRUCKS, VEHICLE CLEANING, ETC.) SHALL BE DISPOSED IN A MANNER THAT PREVENTS CONTACT WITH STORM WATER DISCHARGES FROM THE SITE.

7. FUGITIVE DUST AREAS SHALL BE CONTROLLED BY SPRAYING WATER ON THE DRY AREAS OF THE SITE. CONTRACTOR WILL SUPPLY THE CITY WITH A DUST CONTROL PLAN AT THE TIME OF THE PRE-CONTSTRUCTION MEETING.

8. NO RUBBISH, TRASH, GARBAGE OR OTHER SUCH MATERIALS SHALL BE DISCHARGED INTO DRAINAGE DITCHES OR WATERS OF THE STATE.

9. ALL MATERIALS SPILLED, DROPPED, WASHED OR TRACKED FROM VEHICLES ONTO ROADWAYS OR INTO STORM DRAINS MUST BE REMOVED IMMEDIATELY.

10. THE CONTRACTOR SHALL BE RESPONSIBLE FOR ADJUSTING THE EROSION CONTROL MEASURES (SILT FENCES, STRAW BALES, ETC.) DUE TO GRADE CHANGES OR OTHER UNFORESEEN CONDITIONS DURING DEVELOPMENT OF THE PROJECT.

11. ALL INLETS WILL HAVE TEMPORARY INLET CONTROL.

12. TEMPORARY SANITATION FACILITIES REQUIRED.

13. CONTRACTOR TO COORDINATE WITH PUBLIC WORKS INSPECTOR ON ALL REQUESTS TO MODIFY OR MAKE CHANGES TO SWPPP/EROSION CONTROL PLAN.

LEGEND

- -BMP SILT FENCE/STRAW BALE BARRIER
- -BMP INSPECTIOIN AND MAINTENANCE, BMP STABILIZED CONSTRUCTION ENTRANCE AND WASH AREA
- -TOPSOIL STOCKPILE AREA (OR AS DIRECTED BY OWNER) BMP EARTH BERM BARRIER
- -BMP MATERIALS STORAGE, BMP VEHICLE AND EQUIPMENT FUELING, BMP CONCRETE WASTE MANAGEMENT, BMP PORTABLE TOILETS, BMP EARTH BERM BARRIER
- -BMP DUST CONTROLS, BMP GRADING PRACTICES, BMP CONTAMINATED OR ERODIBLE SURFACE AREAS, REPOSITORY STOCKPILE AREA (OR AS DIRECTED BY OWNER), BMP EARTH BERM BARRIER
- -BMP INLET PROTECTION

NOTES:

1 - ALL PROPOSED AND EXISTING INLETS ARE TO BE PROTECTED. SEE BMP INLET PROTECTION ER.102, BMP CATCH BASIN CLEANING, BMP INSPECTION AND MAINTENANCE FOR INLET PROTECTION DETAILS.

2 - EXISTING GROUND COVER = 50% SEE BMP PRESERVATION OF EXISTING VEGETATION.

3 - SEQUENCE OF CONSTRUCTION

PHASE I
1. INSTALL STABILIZED CONSTRUCTION ENTRANCES.
2. CONSTRUCT SILT FENCES ON THE SITE.
3. CONSTRUCT SEDIMENTATION PONDS WHERE NEEDED PER DISCRETION OF CONTRACTOR.
   SIZE TO BE DETERMINED BY ENGINEER.
4. HALT ALL ACTIVITIES AND CONTACT CIVIL ENGINEERING CONSULTANT TO PERFORM INSPECTION OF BMP'S. GENERAL CONTRACTOR SHALL SCHEDULE AND CONDUCT STORM WATER PRE-CONSTRUCTION MEETING WITH ENGINEER AND ALL GROUND DISTURBING CONTRACTORS BEFORE PRECEDING WITH CONSTRUCTION.
5. PREPARE TEMPORARY PARKING AND STORAGE AREAS.
6. START CONSTRUCTION OF BUILDING PAD AND STRUCTURES. STORM DRAIN WATER DURING CONSTRUCTION WILL BE LOCATED IN RETENTION POND.
7. BEGIN GRADING THE SITE.

PHASE II
1. MAINTAIN SILT FENCE, INLET PROTECTION AND STABILIZED CONSTRUCTION EXITS INSTALLED DURING PHASE #1.
2. COMPLETE PERMANENT DETENTION POND CONSTRUCTION.
3. BEGIN CONSTRUCTION OF UNDERGROUND UTILITIES.
4. INSTALL INLET PROTECTION AT NEW STORM DRAIN INLETS, AS INSTALLED.
8. INSTALL PERMANENT VEGETATION AND PLANT MATERIALS.
9. REMOVE ALL TEMPORARY EROSION & SEDIMENTATION CONTROL DEVICES (ONLY AFTER FINAL STABILIZATION HAS BEEN ACHIEVED).

4 - DETAILS AND BMP'S ON DRAWINGS ER.102 ARE INCORPORATED INTO THIS PLAN BY REFERENCE.

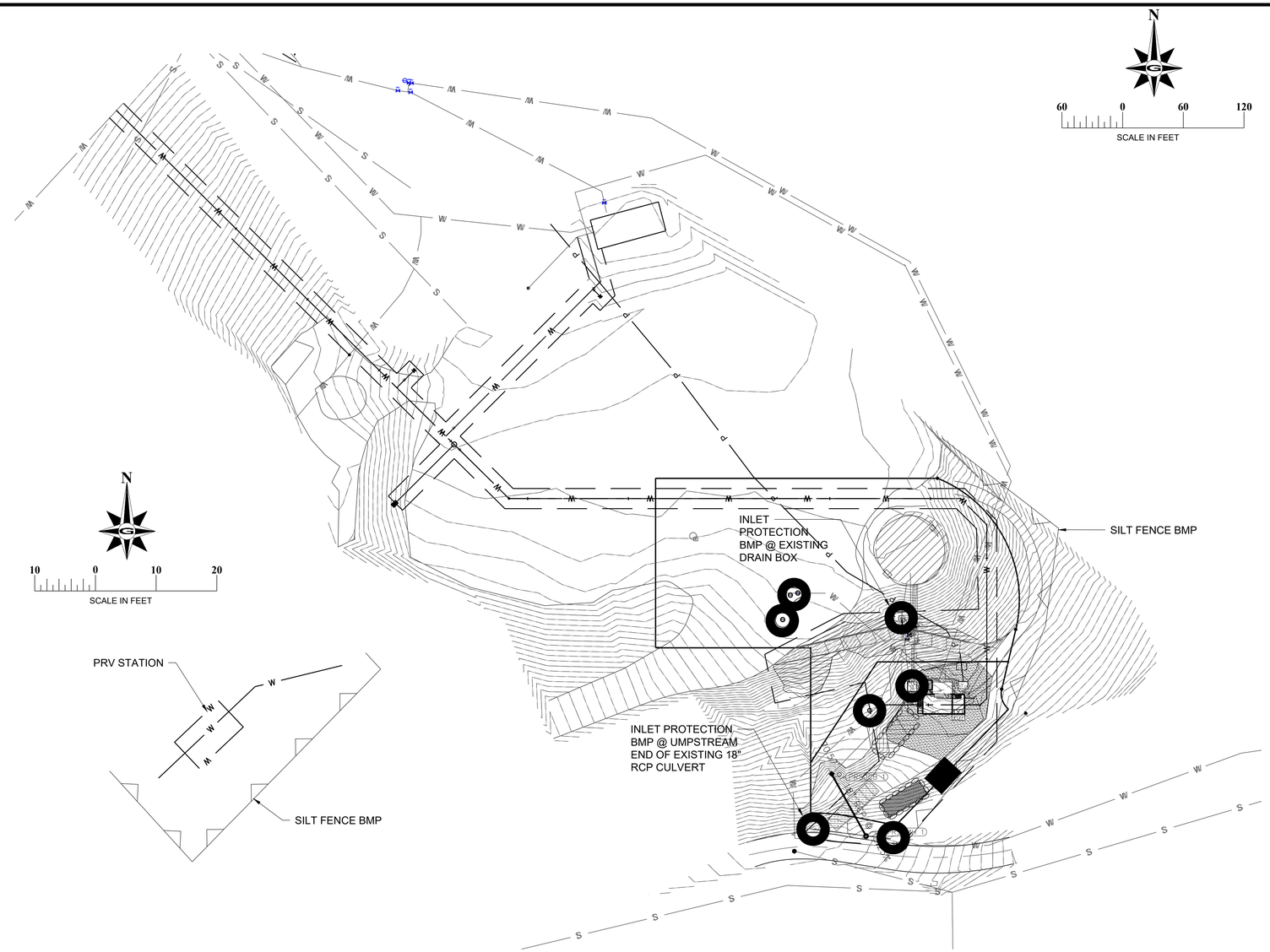

LAND DISTURBANCE NOTES

1. CONTRACTOR SHOULD PERFORM EARTHWORK IN ACCORDANCE WITH CITY LAND DISTURBANCE ORDINANCE, THE CITY STANDARD SPECIFICATIONS, CITY LAND DISTURBANCE DESIGN AND CONSTRUCTION STANDARDS, EROSION, SEDIMENT, REVEGETATION REQUIREMENTS, AND THE DUST CONTROL PLANS REQUIRED BY THE STATE OF UTAH, DEPARTMENT OF ENVIRONMENTAL QUALITY, DIVISION OF AIR QUALITY.

2. THE SEQUENCE OF CONSTRUCTION IS TO BE FOLLOWED.

3. SEDIMENTATION BMPS SHOWN ON THE EROSION CONTROL AND SEDIMENT CONTROL PLANS TO BE INSTALLED WITHIN THE SAME WORKING DAY THE LAND DISTURBANCE OCCURS.

4. DUST CONTROL BMPS ARE TO BE ON SITE AND IMPLEMENTED AS SOON AS LAND DISTURBANCE OCCURS. THE DUST CONTROL AS REQUIRED BY THE STATE OF UTAH AIR QUALITY PLAN IS TO BE SUBMITTED WITH THE GRADING PLAN. THE DEVELOPER IS RESPONSIBLE FOR CONTROLLING THE DUST PRODUCTED AT HIS PROJECT AND SHALL PROVIDE THE NECESSARY MITIGATION TO KEEP THE DUST TO THE ACCEPTABLE LIMITS IDENTIFIED IN THE AIR QUALITY PERMIT OBTAINED FOR THE STATE OF UTAH, DEPARTMENT OF ENVIRONMENTAL QUALITY, AND DIVISION OF AIR QUALITY.

5. ALL AREAS TO BE REVEGETATED ARE TO RECEIVE REVEGETATION BMPS WITHIN 21 DAYS OF DISTURBANCE.

6. IF THE EXISTING GRADE IS DIFFERENT FROM WHAT IS SHOWN ON THIS GRADING PLAN, STOP WORK AND CONTACT CITY, ENGINEERING DEPARTMENT. WORK IS TO REMAIN STOPPED UNTIL THE CITY ENGINEERING DEPARTMENT PROVIDES A WRITTEN NOTICE TO RESUME WORK.

7. THE PROJECT OWNER IS RESPONSIBLE FOR MAINTAINING THE STREETS, STORM DRAINS, AND CHANNELS, DITCHES AND SWALES FREE FROM DEBRIS, SOIL, MUD, OR OTHER MATERIAL THAT WOULD CAUSE A PUBLIC SAFETY CONCERN, VIOLATE THE CITY UPDES PERMIT, STATE OR FEDERAL LAWS, OR PREVENT THE FACILITY FROM OPERATING.

8. ALL CONCRETE TRUCKS ARE TO USE THE DESIGNATED WASHOUT AREA(S). FAILURE TO COMPLY WILL RESULT IN A WORK STOP AND THE OFFENDER COULD BE GUILTY OF A CLASS C MISDEMEANOR.

9. L.O.D. BARRIERS ARE TO BE IN PLACE AND MAINTAINED UNTIL WRITTEN NOTIFICATION IS RECEIVED FROM THE ENGINEERING DEPARTMENT. THE OWNER IS RESPONSIBLE FOR MAINTAINING L.O.D. BARRIERS.

10. IF DISTURBANCE OCCURS OUTSIDE THE L.O.D. WORK WILL STOP AND REMAIN STOPPED UNTIL THE WRITTEN RESPONSE IS RECEIVED FROM THE COUNTY.

11. THE OWNER IS TO BE RESPONSIBLE FOR ADDITIONAL GRADING INFORMATION AS REQUIRED THROUGHOUT THE REMAINDER OF THE PROJECT.

12. SILT FENCES TO BE INSTALLED AT ALL DOWN GRADE SLOPES AND SHALL BE REQUIRED ON PHASE LINE FOR NON-CONCURRENT CONSTRUCTION.

13. ADDITIONAL CONSTRUCTION ENTRANCES SHALL BE REQUIRED ON PHASE LINE FOR NON-CONCURRENT CONSTRUCTION.

GILSON ENGINEERING
Consulting Engineers & Surveyors
12401 SOUTH 450 EAST, BUILDING C, UNIT 2, DRAPER, UT 84020
PHONE: (801) 571-9414 FAX: (801) 571-9449

LICENSED PROFESSIONAL ENGINEER
03/18/2022
No. 362118
Bradley S. Gilson
STATE OF UTAH

POWDER MOUNTAIN WATER AND SEWER IMPROVEMENT DISTRICT

REV	DATE	BY	COMMENTS

REVISIONS

1" SCALE MEASURES 1" ON FULL SIZE SHEET
ADJUST FOR HALF SIZE SHEETS

DATE: FEBRUARY 2022
DRAWING NAME: ER.101 EROSION CONTROL PLAN
DESIGNED/DRAWN BY: JM/BP
CHECKED: ---
APPROVED: ---

EROSION CONTROL PLAN

TOP OF MOUNTAIN WATER SYSTEM
POWDER MOUNTAIN WATER & SEWER IMPROVEMENT DISTRICT
WEBER COUNTY, UTAH

REVISION: A

PROJ. # POW.019

ER.101

AREA CONTROL PROCEDURES

WM-001
1 OF 1

APPLICATIONS

Manufacturing
Material handling
Vehicle Maintenance
Construction
Commercial Activities
Roadways
Waste Containment
Housekeeping Practices

TARGETED POLLUTANTS

- ☑ Sediment
- ☑ Heavy Metals
- ☑ Toxic Materials
- ☑ Oxygen Demanding Substances
- ☑ Oil and Grease
- ☑ Floatable Materials
- ☑ Bacteria and Viruses

DESCRIPTION

Area control procedures involve practicing good housekeeping measures such as maintaining indoor or covered material storage and industrial processing areas. If the area is kept clean, the risk of accumulating materials on footwear and clothing is reduced, in turn the chance of left over pollutants making contact with stormwater polluting surface water is minimized.

IMPLEMENTAION

Area Control procedures can be used at any facility where materials may be tracked into areas where they can come in contact with stormwater runoff. Areas can include material handling areas, storage areas, or process areas.

- Effective practices include the following:
- Store hazardous materials and wastes in covered containers and protect from vandalism.
- Storm Place stock pile if spill cleanup materials where it will be readily accessible.
- Train employees in good housekeeping measures.
- Designate responsible individuals to oversee and enforce control measures
- Cover garments, foot mats and other devices used to collect residual material near the area. Clean regularly.
- Brush off clothing before leaving area
- Stop feet to remove material before leaving area.
- Use floor mats at exits
- Use coverall, smocks, and other over garments in areas where exposure to material is of greatest concern. Remove before leaving area.
- Post signs to remind employees about these practices.

LIMITATIONS

- Procedures and practices presented in this BMP are general. Contractor should identify appropriate practices for the specific materials used or stored onsite.
- May be seen as tedious by employees and therefore may not be followed.

MAINTENANCE

- Materials storage areas and industrial processing areas should be checked regularly to ensure that good housekeeping measures are implemented.
- Verify spill control and cleanup materials are onsite, near storage, unloading and maintenance areas
- Update your spill prevention control plan and stock cleanup material

Vehicle and Equipment Fueling

WM-003
1 OF 1

OBJECTIVES

Manufacturing
Material Handling
Vehicle Maintenance
Construction
Commercial Activities
Roadways
Waste Containment
Housekeeping Practices

TARGETED POLLUTANTS

- ☐ Sediment
- ☑ Heavy Metals
- ☑ Toxic Materials
- ☐ Oxygen Demanding Substances
- ☑ Oil and Grease
- ☐ Floatable Materials
- ☐ Bacteria and Viruses

DESCRIPTION

Prevent fuel spills and leaks, and reduce their impacts to stormwater by using offsite facilities, fueling in designated areas only, enclosing or covering stored fuel, implementing spill controls, and training employees and subcontractors.

IMPLEMENTATION

- Use properly maintained offsite fueling stations whenever possible. Fueling vehicles and equipment outdoors or in areas where fuel may spill/leak onto paved surfaces or into drainage pathways can pollute stormwater. If you fuel a large number of vehicles or pieces of equipment, consider using an offsite fueling station.
- Fueling that must occur on-site use designated areas, located away from drainage courses, to prevent the run-on of stormwater and the runoff of spills properly.
- Educate employees about pollution prevention measures and goals,
- Focus pollution prevention activities on containment of spills and leaks, most of which may occur during liquid transfers.
- Discourage "topping Off" of fuel tanks.
- Always use secondary containment, such as a drain pan, when fueling to catch spills/leaks.
- Carry out all federal and state requirements regarding stationary above ground storage tanks., Avoid mobile fueling of mobile construction equipment around the site; rather, transport the equipment to designated fueling areas. With the exception of tracked equipment such as bulldozers and perhaps forklifts, most vehicles should be able to travel to a designated area with little lost time. Train employees and subcontractors in proper fueling and cleanup procedures.

LIMITATIONS

Sending vehicles/equipment off-site should be done in conjunction with Stabilized Construction Entrance BMP.

MAINTENANCE

- Keep ample supplies of spill cleanup materials on-site
- Inspect fueling areas and storage tanks on a regular schedule

CONCRETE WASTE MANAGEMENT

WM-026
1 OF 1

OBJECTIVES

Housekeeping Practices
Contain Waste
Minimize disturbed Areas
Stabilize Disturbed Areas
Protect Slopes/Channels
Control Site Perimeter
Control Internal Erosion

TARGETED POLLUTANTS

- ☐ Sediment
- ☐ Heavy Metals
- ☐ Toxic Materials
- ☐ Oxygen Demanding Substances
- ☐ Oil and Grease
- ☐ Floatable Materials
- ☐ Bacteria and Viruses

DESCRIPTION:

Prevent or reduce the discharge of pollutants to stormwater from concrete wash by conducting washout off-site, performing on-site washout in a designated area, and training employees and subcontractors.

APPLICATIONS:

This technique is applicable to all types of sites.

INSTALLATION/APPLICATION CRITERIA:

- Store dry and wet materials under cover, away from drainage areas.
- Avoid mixing excess amounts of fresh concrete or cement on-site.
- Perform washout of concrete trucks off-site or in designated areas only.
- Do not wash out concrete trucks into storm drains, open ditches, streets, or streams.
- Do not allow excess concrete to be dumped on-site, except in designated areas.
- When washing concrete to remove fine particles and expose the aggregate, avoid creating runoff by draining the water within a bermed or level area. (See Earth Berm Barrier information sheet.)
- Train employees and subcontractors in proper concrete waste management.

LIMITATIONS:

Off-site washout of concrete wastes may not always be possible.

MAINTENANCE:

- Inspect subcontractors to ensure that concrete wastes are being properly managed.
- If using a temporary pit, dispose hardened concrete on a regular basis.

EARTH BERM BARRIER

WM-027
1 OF 1

OBJECTIVES

Housekeeping Practices
Contain Waste
Minimize disturbed Areas
Stabilize Disturbed Areas
Protect Slopes/Channels
Control Site Perimeter
Control Internal Erosion

TARGETED POLLUTANTS

- ☐ Sediment
- ☐ Heavy Metals
- ☐ Toxic Materials
- ☐ Oxygen Demanding Substances
- ☐ Oil and Grease
- ☐ Floatable Materials
- ☐ Bacteria and Viruses

DESCRIPTION:

A temporary containment control constructed of compacted soil.

APPLICATION:

- Construct around waste and materials storage areas.
- Construct around staging and maintenance areas.
- Construct around vehicle parking and servicing areas.

INSTALLATION/APPLICATION CRITERIA:

- Construct an earthen berm down hill of the area to be controlled. The berm should surround fueling facilities and maintenance areas on three sides to provide containment.
- Berm needs to be a minimum of 1 foot tall by 1 foot wide and be compacted by earth moving equipment.

LIMITATIONS:

- Not effective on steep slopes.
- Limits access to controlled area.
- Personnel need to quickly respond to spills with remedial actions.

MAINTENANCE:

- Observe daily for any non-stormwater discharge.
- Look for runoff bypassing ends of berms or undercutting berms.
- Repair or replace damaged areas of the berm and remove accumulated sediment.
- Recompact soil around berm as necessary to prevent piping.

HAZARDOUS WASTE MANAGEMENT

WM-011
1 OF 1

OBJECTIVES

New Development
Residential
Commercial Activities
Industrial Activities
Municipal Facilities
Illegal Discharges

TARGETED POLLUTANTS

- ☑ Sediment
- ☑ Heavy Metals
- ☑ Toxic Materials
- ☐ Oxygen Demanding Substances
- ☑ Oil and Grease
- ☑ Floatable Materials
- ☐ Bacteria and Viruses

DESCRIPTION

Prevent or reduce the discharge of pollutants to stormwater from hazardous waste through proper material use, waste disposal, and training of employees and subcontractors.

IMPLEMENTAION

Many of the chemicals used on-site can be hazardous materials which become hazardous waste upon disposal. These wastes may include:

- Paints and solvents, petroleum products such as oils, fuels and greases, herbicides and pesticides, acids for cleaning masonry, and concrete curing compounds.
-
- In addition, sites with existing structures may contain wastes which must be disposed of in accordance with federal, state and local regulations, including:
- Sandblasting grit mixed with lead, cadmium or chromium based paints, asbestos, and PCBs

INSTALLATION/APPLICATION CRITERIA

The following steps will help reduce stormwater pollution from hazardous wastes:

- Use the entire product before disposing of the container.
- Do not remove the original product label; it contains important safety and disposal information.
- Do not over-apply herbicides and pesticides. Prepare only the amount needed. Follow the recommended usage instructions. Over-application is expensive and environmentally harmful. Apply surface dressings in several smaller applications, as opposed to one large application, to allow time for infiltration and to avoid excess material being carried off-site by runoff. Do not apply these chemicals just before it rains. People applying pesticides must be certified in accordance with Federal and State regulations.

LIMITATIONS:

Hazardous waste that cannot be reused or recycled must be disposed of by a licensed hazardous waste hauler.

MAINTENANCE:

- Inspect hazardous waste receptacles and areas regularly.
- Arrange for regular hazardous waste collection.

VEHICLE AND EQUIPMENT WASH DOWN AREA

WM-028
1 OF 1

OBJECTIVES

Housekeeping Practices
Contain Waste
Minimize Disturbed Areas
Stabilize Disturbed Areas
Protect Slopes/Channels
Control Site Perimeter
Control Internal Erosion

TARGETED POLLUTANTS

- ☑ Sediment
- ☐ Heavy Metals
- ☑ Toxic Materials
- ☑ Oxygen Demanding Substances
- ☐ Oil and Grease
- ☐ Floatable Materials
- ☐ Bacteria and Viruses

DESCRIPTION:

A stabilized pad of crushed stone for general washing of equipment and construction vehicles.

APPLICATION:

- At any site where regular washing of vehicles and equipment will occur. May also be used as a filling point for water trucks limiting erosion caused by overflow or spillage of water.

INSTALLATION/APPLICATION CRITERIA:

- Clear and grub area and grade to provide maximum slope of 1%
- Compact subgrade and place filter fabric if desired (recommended for wash areas to remain in use for more than 3 months).
- Place coarse aggregate, 1 to 2-1/2 inches in size, to a minimum depth of 8 inches.
- Install silt fence down gradient (see silt fence BMP information sheet).

LIMITATIONS:

- Cannot be utilized for washing equipment or vehicles that may cause contamination of runoff such as fertilizer equipment or concrete equipment. Solely used to control sediment in wash water.

MAINTENANCE:

- Inspect daily for loss of gravel or sediment buildup.
- Inspect adjacent area for sediment deposit and install additional controls as necessary.
- Repair area and replace gravel as required to maintain control in good working condition.
- Expand stabilized area as required to accommodate activities.
- Maintain silt fence as outlined in specific silt fence BMP information sheet.

PORTABLE TOILETS

WM-029
1 OF 1

OBJECTIVES

Housekeeping Practices
Contain Waste

TARGETED POLLUTANTS

- ☐ Sediment
- ☐ Heavy Metals
- ☐ Toxic Materials
- ☐ Oxygen Demanding Substances
- ☐ Oil and Grease
- ☐ Floatable Materials
- ☑ Bacteria and Viruses
- ☑ Other Waste

DESCRIPTION

Temporary On-Site Sanitary Facilities for construction personnel

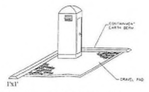

APPLICATION

- All sites with no permanent sanitary facilities or where permanent facility is to far from activities.
- Installation/application criteria:
- Locate portable toilets in convenient locations throughout the site
- Prepare level, gravel surface and provide clear access to the toilets for servicing and for on-site personnel.
- Construct earth berm perimeter (se earth berm barrier information sheet). Control for spill/protection leak.

LIMITATIONS

No limitations

MAINTENANCE

- Portable toilets should be maintained in good working order by licensed service with daily observation for leak detection.
- Regular waste collection should be arranged with licensed service.
- All waste should be deposited in sanitary sewer system for treatment with appropriate agency approval.

RIPRAP

TC-004
1 OF 1

OBJECTIVES

Soils
Area Required
Slope
Water Availability
Aesthetics
Hydraulic Head
Environmental Side Effects

TARGETED POLLUTANTS

- ☐ Sediment
- ☐ Heavy Metals
- ☐ Toxic Materials
- ☐ Oxygen Demanding Substances
- ☐ Oil and Grease
- ☐ Floatable Materials
- ☐ Bacteria and Viruses

DESCRIPTION:

Riprap is a permanent, erosion-resistant protective layer made of loose stones. It is intended to protect soil from erosion in areas of concentrated runoff. Riprap may also be used to stabilize slopes that are unstable because of seepage problems.

APPLICATION:

- Riprap is normally used at locations where erosive forces from water flow exceed the ability of the soil or vegetative cover to resist those forces.
- Riprap can be used for pipe outlet protection, channel lining, scour protection, etc.
- Riprap is commonly used for wave protection on lakes.

INSTALLATION/APPLICATION CRITERIA:

- For slopes steeper than 2:1, consider using materials other than riprap for erosion protection.
- If riprap is being planned for the bottom of a permanently flowing channel, the bottom can be modified to enhance fish habitat. This can be done by constructing riffles and pools which simulate natural conditions.
- When working within flowing streams, measures should be taken to prevent excessive turbidity and erosion during construction. Bypassing base flows or temporarily blocking base flows are two possible methods. Work should be done during a period of low flow.
- In designing riprap consider the following:
- Use durable rock, such as granite, and a variety of rock sizes.
- The thickness of riprap layers should be at least 1.25 times the max. stone diameter.
- Filter material is usually required between riprap and the underlying soil surface.

LIMITATIONS:

- Riprap may be unstable on very steep slopes.
- The placement of a riprap in streams requires a state stream alteration permit.

MAINTENANCE:

- Riprap should be inspected annually and after major storms.
- If riprap has been damaged, repairs should be made promptly to prevent a progressive failure.

If repairs are needed repeatedly at one location, the site should be evaluated to see if original design conditions have changed.

GILSON ENGINEERING
Consulting Engineers & Surveyors
12401 SOUTH 450 EAST BUILDING C, UNIT 2, DRAPER, UT 84020
PHONE: (801) 571-5414 FAX: (801) 571-5449

LICENSED PROFESSIONAL ENGINEER
03/18/2022
No. 362118
Bradley S. Gilson
STATE OF UTAH

POWDER MOUNTAIN WATER AND SEWER IMPROVEMENT DISTRICT

REV	DATE	BY	COMMENTS

REVISIONS

1" SCALE MEASURES 1" ON FULL SIZE SHEET
ADJUST FOR HALF SIZE SHEETS

DATE: FEBRUARY 2022
DRAWING NAME: BMP DETAILS
DESIGNED/DRAWN BY: JM/BP
CHECKED: ---
APPROVED: ---

BMP DETAILS

TOP OF MOUNTAIN WATER SYSTEM
POWDER MOUNTAIN WATER & SEWER IMPROVEMENT DISTRICT
WEBER COUNTY, UTAH

REVISION: A
PROJ. # POW.019

ER.102

STABILIZED CONTRUCTION ENTRANCE

S-027
1 OF 1

OBJECTIVES

Housekeeping Practices
Contain Waste
Minimize Disturbed Areas
Stabilize Disturbed Areas
Protect Slopes/Channels
Control Site Perimeter
Control Internal Erosion

TARGETED POLLUTANTS

- ☑ Sediment
- ☐ Heavy Metals
- ☐ Toxic Materials
- ☐ Oxygen Demanding Substances
- ☐ Oil and Grease
- ☐ Floatable Materials
- ☐ Bacteria and Viruses

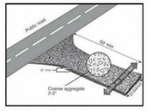

DESCRIPTION:
A stabilized pad of crushed stone located where construction traffic enters or leaves the site from or to paved surface.

APPLICATIONS:
At any point of ingress or egress at a construction site where adjacent traveled way is paved. Generally applies to sites over 2 acres unless special conditions exist.

INSTALLATION/APPLICATION CRITERIA:
- Clear and grub area and grade to provide maximum slope of 2%.
- Compact subgrade and place filter fabric if desired (recommended for entrances to remain for more than 3 months.
- Place coarse aggregate, 1 to 2-1/2 inches in size, to a minimum depth of 8 inches.

LIMITATIONS:
- Requires periodic top dressing with additional stones.
- Should be used in conjunction with street sweeping on adjacent public right-of-way.

MAINTENANCE:
- Inspect daily for loss of gravel or sediment buildup.
- Inspect adjacent roadway for sediment deposit and clean by sweeping or shoveling.
- Repair entrance and replace gravel as required to maintain control in good working condition.
- Expand stabilized area as required to accommodate traffic and prevent erosion at driveways.

OUTDOOR STORAGE OF RAW MATERIALS

WM-008
1 OF 1

OBJECTIVES

Manufacturing
Material Handling
Vehicle Maintenance
Construction
Commercial Activities
Roadways
Waste Containment
Housekeeping Practices

TARGETED POLLUTANTS

- ☑ Sediment
- ☑ Heavy Metals
- ☑ Toxic Materials
- ☐ Oxygen Demanding Substances
- ☑ Oil and Grease
- ☑ Floatable Materials
- ☐ Bacteria and Viruses

DESCRIPTION
Prevent or reduce the discharge of pollutants to stormwater from outdoor materials and product storage areas by enclosing or covering materials, installing secondary containment, and preventing stormwater run-on.

INPLEMENTATION
Protect materials from rainfall, run-on, runoff and wind dispersal:
- Store material indoors.
- Cover the storage area with a roof.
- Cover the material with a temporary covering made of polyethylene, polypropylene, or hypalon.
- Minimize stormwater run-on by enclosing the area or building a berm around the area.
- Use a "doghouse" for storage of liquid containers.
- Parking lots or other surfaces near bulk materials should be swept periodically to remove debris blown or washed from storage area.
- < Install pellet traps at stormwater discharge points where plastic pellets are loaded and unloaded.
- Keep liquids in a designated area on a paved impervious surface within a secondary containment.
- Keep outdoor storage containers in good condition.
- Use berms and curbing.
- Use catch basin filtration inserts.

LIMITATIONS
- Space limitations may preclude storing some materials indoors.
- Some municipalities require that secondary containment areas (regardless of size) be connected to the sanitary sewer, prohibiting any hard connections to the storm drain.
- Storage sheds often must meet building and fire code requirements.

MAINTENANCE:
Berm and curbing repair and patching.

DUST CONTROLS

S-006
1 OF 1

OBJECTIVES

Housekeeping Practices
Contain Waste
Minimize Disturbed Areas
Stabilize Disturbed Areas
Protect Slopes/Channels
Control Site Perimeter
Control Internal Erosion

TARGETED POLLUTANTS

- ☐ Sediment
- ☐ Heavy Metals
- ☐ Toxic Materials
- ☐ Oxygen Demanding Substances
- ☐ Oil and Grease
- ☐ Floatable Materials
- ☐ Bacteria and Viruses

DESCRIPTION:
Dust control measures are used to stabilize soil from wind erosion, and reduce dust by construction activities.

APPLICATION:
Dust control is useful in any process area, loading and unloading area, material handling areas, and transfer areas where dust is generated. Street sweeping is limited to areas that are paved.

INSTALLATION/APPLICATION CRITERIA:
- Mechanical dust collection systems are designed according to the size of dust particles and the amount of air to be processed. Manufacturers' recommendations should be followed for installation (as well as the design of the equipment).
- Two kinds of street weepers are common: brush and vacuum. Vacuum sweepers are more efficient and work best when the area is dry.
- Mechanical equipment should be operated according to the manufacturers' recommendations and should be inspected regularly.

LIMITATIONS:
- Is generally more expensive than manual systems.
- May be impossible to maintain by plant personnel (the more elaborate equipment).
- Is labor and equipment intensive and may not be effective for all pollutants (street sweepers).

MAINTENANCE:
If water sprayers are used, dust-contaminated waters should be collected and taken for treatment. Areas will probably need to be resprayed to keep dust from spreading.

CONTAMINATED OR ERODIABLE SURFACE AREAS

WM-017
1 OF 1

OBJECTIVES

Manufacturing
Material Handling
Vehicle Maintenance
Construction
Commercial Activities
Roadways
Waste Containment
Housekeeping Practices

TARGETED POLLUTANTS

- ☑ Sediment
- ☑ Heavy Metals
- ☑ Toxic Materials
- ☑ Oxygen Demanding Substances
- ☐ Oil and Grease
- ☑ Floatable Materials
- ☐ Bacteria and Viruses

DESCRIPTION:
Prevent or reduce the discharge of pollutants to stormwater from contaminated or erodible surface areas by leaving as much vegetation on-site as possible, minimizing soil exposure time, stabilizing exposed soils, and preventing stormwater runon and runoff.

IMPLEMENTAION
This BMP addresses soils which are not so contaminated as to exceed criteria but the soil is eroding and carrying pollutants off in the stormwater.

Contaminated or erodible surface areas can be controlled by:
- Preservation of natural vegetation,
- Re-vegetation,
- Chemical stabilization,
- Removal of contaminated soils, or
- Geosynthetics.

LIMITATIONS:
Disadvantages of preserving natural vegetation or re-vegetating include:
- Requires substantial planning to preserve and maintain the existing vegetation.
- May not be cost-effective with high land costs.
- Lack of rainfall and/or poor soils may limit the success of re-vegetated areas.
- Disadvantages of chemical stabilization include:
- Creation of impervious surfaces.
- May cause harmful effects on water quality.
- Is usually more expensive than vegetative cover.

MAINTENANCE:
Maintenance should be minimal, except if irrigation of vegetation is necessary.

ILLEGAL DUMPING CONTROLS

WM-021
1 OF 1

OBJECTIVES

New Development
Residential
Commercial Activities
Industrial Activities
Municipal Facilities
Illegal Discharges

TARGETED POLLUTANTS

- ☐ Sediment
- ☐ Heavy Metals
- ☑ Toxic Materials
- ☑ Oxygen Demanding Substances
- ☑ Oil and Grease
- ☑ Floatable Materials
- ☐ Bacteria and Viruses

DESCRIPTION:
Implement measures to detect, correct, and enforce against illegal dumping of pollutants on streets, into the storm drain system, and into creeks. Substance illegally dumped on streets, into the storm drain system, and into creeks includes paints, used oil and other automotive fluids, construction debris, chemicals, fresh concrete, leaves, grass clippings, and pet wastes. All of these wastes can cause storm water and receiving water quality problems as well as clog the storm drain system.

IMPLEMENTAION
One of the keys to success is increasing the general public's awareness of the problem and to at least identify the incident, if not correct it. There are a number of ways of accomplishing this:
- Train municipal staff from all departments to recognize and report incidents.
- Deputize municipal staff that may come into contact with illegal dumping with the authority to write illegal dumping tickets for offenders caught in the act.
- Educate the public.
- Provide the public with a mechanism for reporting such as a hot line.

Establish system for tracking incidents which will identify:
- Illegal dumping "hot spots",
- Types and quantities (in some cases) of wastes,
- Patterns in time of occurrence (time of day/night, month, or year),
- Mode of dumping (abandoned containers, "midnight dumping" from moving vehicles, direct dumping of materials, accident/spills), and
- Responsible parties.
- A tracking system also helps manage the program by indicating trends, and identifying who, what, when, and where efforts should be concentrated.

LIMITATIONS
The elimination of illegal dumping is dependent on the availability, convenience, and cost of alternative means of disposal.

SILT FENCE

S-026
1 OF 1

OBJECTIVES

Housekeeping Practices
Contain Waste
Minimize Disturbed Areas
Stabilize Disturbed Areas
Protect Slopes/Channels
Control Site Perimeter
Control Internal Erosion

TARGETED POLLUTANTS

- ☑ Sediment
- ☐ Heavy Metals
- ☐ Toxic Materials
- ☐ Oxygen Demanding Substances
- ☐ Oil and Grease
- ☐ Floatable Materials
- ☐ Bacteria and Viruses

DESCRIPTION:
A temporary sediment barrier consisting of entrenched filter fabric stretched across and secured to supporting posts.

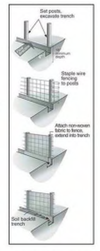

APPLICATION:
- Perimeter control: place barrier at down gradient limits of disturbance
- Sediment barrier: place barrier at toe of slope or soil stockpile
- Protection of existing waterways: place barrier at top of stream bank.
- Inlet protection: place fence surrounding catch basins

INSTALLATION/APPLICATION CRITERIA:
- Place posts 6 feet apart on center along contour (or use preassembled unit) and drive 2 feet minimum into ground. Excavate an anchor trench immediately up gradient of posts.
- Secure wire mesh (14 gage min. With 6 inch openings) t upslope side of posts. Attach with heavy duty 1 inch long wire staples, tie wires or hog rings.
- Cut fabric to required width, unroll along length of barrier and drape over barrier. Secure fabric to mesh with twine, staples, or similar, with trailing edge extending into anchor trench.
- Backfill trench over filter fabric to anchor.

LIMITATIONS:
- Recommended maximum drainage area of 0.5 acre per 100 feet of fence
- Recommended maximum up gradient slope length of 150 feet
- Recommended maximum uphill grade of 2:1 (50%)
- Recommended maximum flow rate of 0.5 cfs
- Ponding should not be allowed behind fence

MAINTENANCE:
- Inspect immediately after any rainfall and at least daily during prolonged rainfall.
- Look for runoff bypassing ends of barriers or undercutting barriers.
- Repair or replace damaged areas of the barrier and remove accumulated sediment.
- Re-anchor fence as necessary to prevent shortcutting.
- Remove accumulated sediment when it reaches ½ the height of the fence.

OUTDOOR LOADING/UNLOADING MATERIALS

WM-007
1 OF 1

OBJECTIVES

Manufacturing
Material Handling
Vehicle Maintenance
Construction
Commercial Activities
Roadways
Waste Containment
Housekeeping Practices

TARGETED POLLUTANTS

- ☐ Sediment
- ☑ Heavy Metals
- ☑ Toxic Materials
- ☑ Oxygen Demanding Substances
- ☑ Oil and Grease
- ☑ Floatable Materials
- ☐ Bacteria and Viruses

DESCRIPTION
Prevent or reduce the discharge of pollutants to stormwater from outdoor loading/unloading of materials.

IMPLMENTATION
- Park tank trucks or delivery vehicles so that spills or leaks can be contained.
- Cover the loading/unloading docks to reduce exposure of materials to rain.
- A seal or door skirt between trailer and building can also prevent exposure to rain.
- Design loading/unloading area to prevent stormwater run-on: grade/Berm and position roof downspouts to direct stormwater away from loading/unloading areas.
- Contain leaks during transfer.
- Use drip pans under hoses.
- Make sure fork lift operators are properly trained.
- Train employees for spill containment and cleanup.

LIMITATIONS
- Space and time limitations may preclude all transfers from being performed indoors or under cover.
- It may not be possible to conduct transfers only during dry weather.

MAINTENANCE
- Conduct regular inspections and make repairs as necessary. The frequency of repairs will depend on the age of the facility.
- Check loading and unloading equipment regularly for leaks: valves, pumps, flanges, and connections.

BMP: GRADING PRACTICES

SOILS EXPOSED FROM LAND GRADING ACTIVITIES ARE VERY VULNERABLE TO EROSION

DESCRIPTION:
CONTROL SOIL EROSION BY MINIMIZING THE EXPOSURE OF BARE SOIL TO EROSIVE FORCES. THIS IS DONE BY:
(1) LIMITING THE AMOUNT OF LAND DISTURBED AT ONE TIME IN PREPARATION FOR CONSTRUCTION.
(2) LIMITING THE AMOUNT OF TIME BETWEEN THE DISTURBANCE OF SOIL AND PROTECTION OR STABILIZATION OF DISTURBED SOILS.
(3) USING GRADING PRACTICES TO PROTECT EXPOSED SOILS SUSCEPTIBLE TO STORM WATER RUNOFF. RELATED PRACTICES INCLUDE CONSTRUCTION SEQUENCING, PRESERVATION OF EXISTING VEGETATION, EROSION CONTROL PRACTICES AND SEDIMENT CONTROL PRACTICES.

APPROACH:
- LIMIT THE AREA OF DISTURBANCE TO THOSE AREAS REQUIRING GRADING. THIS PRESERVES EXISTING VEGETATION AND REDUCES THE VULNERABILITY OF SOIL TO EROSION.
- BASED ON EROSION POTENTIAL AND SEDIMENT CONTROL MEASURES ON THE SITE, ESTABLISH WHAT AREAS ARE TO GRADED AT ONE TIME.
- AN UNDISTURBED BUFFER ZONE CONTAINING VEGETATION AT THE LOWEST ELEVATION OF A CONSTRUCTION SITE CAN REDUCE THE TRANSPORT OF SEDIMENT OFF SITE.
- INITIATE SOIL PROTECTION MEASURES DURING THE COURSE OF WORK TO MINIMIZE THE LENGTH OF TIME SOILS EXPOSED TO EROSIVE FORCES.
- CONDUCT WORK IN STAGES SO THAT CONSTRUCTION OR SOIL STABILIZATION OCCURS PROMPTLY AFTER DISTURBANCE OF SOIL.
- ESTABLISH A SCHEDULE GOVERNING THE STABILIZATION OF DISTURBED SLOPES, BOTH IN TERMS OF PASSAGE OF TIME SINCE COMMENCEMENT AND COMPLETION OF DISTURBANCE AND IN TERMS OF PLANTING SEASON.
- LEAVING THE SURFACE OF THE DISTURBED SOIL GRADED IN A ROUGHENED CONDITION (NOT SMOOTH) CAN REDUCE THE QUANTITY AND VELOCITY OF STORM WATER RUNOFF.
- PREVENT STORM WATER RUNOFF FROM RUNNING ONTO STEEP SLOPES FROM ABOVE.
- AVOID LONG, STEEP CUT OR FILL SLOPES THAT ALLOW RUNOFF WATER OF SUFFICIENT QUANTITY OR VELOCITY TO CUT INTO AND ERODE THE SLOPE.

LIMITATIONS:
- THE SPECIFIC APPROACH TO GRADING ON A PARTICULAR SITE DEPENDS ON THE CONDITIONS OF THE SITE AND SURROUNDING LAND; ENGINEERING JUDGMENT IS REQUIRED TO DESIGN THE APPROACH BEST SUITED FOR EACH SITE.

MAINTENANCE:
- PRACTICES MAY NEED TO VARY FROM THE APPROVED PLAN IF EROSION PROBLEMS APPEAR WHEN STORM WATER RUNOFF OCCURS.

OBJECTIVES
- ☐ HOUSEKEEPING PRACTICES
- ☐ CONTAIN WASTE
- ☑ MINIMIZE DISTURBED AREAS
- ☒ STABILIZE DISTURBED AREAS
- ☒ PROTECT SLOPES/CHANNELS
- ☐ CONTROL SITE PERIMETER
- ☒ CONTROL INTERNAL EROSION

TARGETED POLLUTANTS
- ■ SEDIMENT
- ☐ NUTRIENTS
- ☐ HEAVY METALS
- ☐ TOXIC MATERIALS
- ☐ OXYGEN DEMANDING SUBSTANCES
- ☐ OIL & GREASE
- ☐ FLOATABLE MATERIALS
- ☐ BACTERIA & VIRUSES

- ■ HIGH IMPACT
- ☒ MEDIUM IMPACT
- ☐ LOW OR UNKNOWN IMPACT

IMPLEMENTATION REQUIRED
- ☒ CAPITAL COSTS
- ☐ O&M COSTS
- ☐ MAINTENANCE
- ■ TRAINING

- ■ HIGH ☒ MEDIUM ☐ LOW

GILSON ENGINEERING
Consulting Engineers & Surveyors
12401 SOUTH 450 EAST, BUILDING C, UNIT 2, DRAPER, UT 84020
PHONE: (801) 571-3414 FAX: (801) 571-9449

LICENSED PROFESSIONAL ENGINEER
03/18/2022
No. 362118
Bradley S. Gilson
STATE OF UTAH

POWDER MOUNTAIN WATER AND SEWER IMPROVEMENT DISTRICT

REV	DATE	BY	COMMENTS

REVISIONS

1" SCALE MEASURES 1" ON FULL SIZE SHEET
ADJUST FOR HALF SIZE SHEETS

DATE: FEBRUARY 2022
DRAWING NAME: BMP DETAILS
DESIGNED/DRAWN BY: JM/BP
CHECKED: ---
APPROVED: ---

BMP DETAILS
TOP OF MOUNTAIN WATER SYSTEM
POWDER MOUNTAIN WATER & SEWER IMPROVEMENT DISTRICT
WEBER COUNTY, UTAH

REVISION: A
PROJ. # POW.019
ER.103

BMP: CONSTRUCTION SEQUENCING

In sequenced construction, sites are completed in stages and completed portions are permanently stabilized before other areas are disturbed

DESCRIPTION:
CONSTRUCTION SEQUENCING REQUIRES CREATING AND FOLLOWING A WORK SCHEDULE THAT BALANCES THE TIMING OF LAND DISTURBANCE ACTIVITIES AND THE INSTALLATION OF MEASURES TO CONTROL EROSION AND SEDIMENTATION, IN ORDER TO REDUCE ON-SITE EROSION AND OFF-SITE SEDIMENTATION. STAGING AREAS CAN BE USED TO LIMIT CONTAMINATION AND EROSION.

APPROACH:
CONSTRUCTION SEQUENCING CAN BE USED TO PLAN EARTHWORK AND EROSION AND SEDIMENT CONTROL (ESC) ACTIVITIES AT SITES WHERE LAND DISTURBANCES MIGHT AFFECT WATER QUALITY IN A RECEIVING WATER BODY.

CONSTRUCTION SEQUENCING SCHEDULES SHOULD, AT A MINIMUM INCLUDE THE FOLLOWING:
- THE ESC PRACTICES THAT ARE TO BE INSTALLED
- PRINCIPAL DEVELOPMENT ACTIVITIES
- WHICH MEASURES SHOULD BE INSTALLED BEFORE OTHER ACTIVITIES ARE STARTED
- COMPATIBILITY WITH THE GENERAL CONTRACT CONSTRUCTION SCHEDULE

THE FOLLOWING ACTIVITIES AND FEATURES SHOULD BE INCLUDED (AS THEY APPLY):
- CONSTRUCTION ACCESS-ENTRANCE TO SITE, CONSTRUCTION ROUTES, AREAS DESIGNATED FOR EQUIPMENT PARKING
- SEDIMENT TRAPS AND BARRIERS-BASIN TRAPS, SEDIMENT FENCES, OUTLET PROTECTION
- RUNOFF CONVEYANCE SYSTEM-STABILIZE STREAM BANKS, STORM DRAINS, CHANNELS, INLET AND OUTLET PROTECTION, SLOPE DRAINS
- LAND CLEARING AND GRADING-SITE PREPARATION (CUTTING, FILLING, AND GRADING, SEDIMENT TRAPS, BARRIERS, DIVERSIONS, DRAINS, SURFACE ROUGHENING)
- LANDSCAPING AND FINAL STABILIZATION-TOP SOILING, TREES AND SHRUBS, PERMANENT SEEDING, MULCHING, SODDING, RIPRAP

LIMITATIONS:
- WEATHER AND OTHER UNPREDICTABLE VARIABLES MAY AFFECT CONSTRUCTION SEQUENCING SCHEDULES.

MAINTENANCE:
- THE CONSTRUCTION SEQUENCE SHOULD BE FOLLOWED THROUGHOUT THE PROJECT AND THE WRITTEN PLAN SHOULD BE MODIFIED BEFORE ANY CHANGES IN CONSTRUCTION ACTIVITIES ARE EXECUTED.

APPLICATIONS
- ☐ MANUFACTURING
- ☒ MATERIAL HANDLING
- ☐ VEHICLE MAINTENANCE
- ☒ CONSTRUCTION
- ☐ COMMERCIAL ACTIVITIES
- ☐ ROADWAYS
- ☐ WASTE CONTAINMENT
- ☐ HOUSEKEEPING PRACTICES

TARGETED POLLUTANTS
- ■ SEDIMENT
- ☒ NUTRIENTS
- ☐ HEAVY METALS
- ☐ TOXIC MATERIALS
- ☐ OXYGEN DEMANDING SUBSTANCES
- ☐ OIL & GREASE
- ☒ FLOATABLE MATERIALS
- ☐ BACTERIA & VIRUSES

- ■ HIGH IMPACT
- ☒ MEDIUM IMPACT
- ☐ LOW OR UNKNOWN IMPACT

IMPLEMENTATION REQUIRED
- ☒ CAPITAL COSTS
- ☐ O&M COSTS
- ☒ MAINTENANCE
- ☐ TRAINING

■ HIGH ☒ MEDIUM ☐ LOW

OUTDOOR STORAGE OF RAW MATERIALS

WM-008
1 OF 1

OBJECTIVES
- Manufacturing
- Material Handling
- Vehicle Maintenance
- Construction
- Commercial Activities
- Roadways
- Waste Containment
- Housekeeping Practices

TARGETED POLLUTANTS
- ☑ Sediment
- ☑ Heavy Metals
- ☑ Toxic Materials
- ☐ Oxygen Demanding Substances
- ☑ Oil and Grease
- ☑ Floatable Materials
- ☐ Bacteria and Viruses

DESCRIPTION
Prevent or reduce the discharge of pollutants to stormwater from outdoor materials and product storage areas by enclosing or covering materials, installing secondary containment, and preventing stormwater run-on.

INPLEMENTATION
Protect materials from rainfall, run-on, runoff and wind dispersal:
- Store material indoors.
- Cover the storage area with a roof.
- Cover the material with a temporary covering made of polyethylene, polypropylene, or hypalon.
- Minimize stormwater run-on by enclosing the area or building a berm around the area.
- Use a "doghouse" for storage of liquid containers.
- Parking lots or other surfaces near bulk materials should be swept periodically to remove debris blown or washed from storage area.
- < Install pellet traps at stormwater discharge points where plastic pellets are loaded and unloaded.
- Keep liquids in a designated area on a paved impervious surface within a secondary containment.
- Keep outdoor storage containers in good condition.
- Use berms and curbing.
- Use catch basin filtration inserts.

LIMITATIONS
- Space limitations may preclude storing some materials indoors.
- Some municipalities require that secondary containment areas (regardless of size) be connected to the sanitary sewer, prohibiting any hard connections to the storm drain.
- Storage sheds often must meet building and fire code requirements.

MAINTENANCE:
Berm and curbing repair and patching.

TEMPORARY AND PERMANENT SEEDING

S-011
1 OF 1

OBJECTIVES
- Housekeeping Practices
- Contain Waste
- Minimize Disturbed Areas
- Stabilize Disturbed Areas
- Protect Slopes/Channels
- Control Site Perimeter
- Control Internal Erosion

TARGETED POLLUTANTS
- ☑ Sediment
- ☐ Heavy Metals
- ☐ Toxic Materials
- ☐ Oxygen Demanding Substances
- ☐ Oil and Grease
- ☐ Floatable Materials
- ☐ Bacteria and Viruses

DEFINITION:
Temporary seeding - establishment of short term cover by application of rapidly germinating seed mix (alternatively hydroseeding may be utilized).
Permanent seeding - establishment of final term cover by application of perennial seed mix (alternatively sod may be utilized).

APPLICATION:
Disturbed areas that are at final grade and which will not be disturbed by continuing activities on site. Also areas that are not at final grade but which will be left untouched in excess of one year.

RECOMMENDED SEED MIX:
The recommended seed mix will be dependent on site specific information such as elevation, exposure, soils, water available and topography.

LIMITATIONS:
- Limited to areas that will not be subject to traffic or high usage.
- May require irrigation and fertilizer which creates potential for impacting runoff quality.
- May only be applied during appropriate planting season, temporary cover required until that time.

INSTALLATION:
- Roughen soil to a depth of 2 inches. Add fertilizer, manure, topsoil as necessary.
- Evenly distribute seed using a commonly accepted method such as; breast seeding, drilling, hydroseeding.
- Use a seed mix appropriate for soil and location that will provide rapid germination and growth. Check with County for recommended mix and application rate.
- Cover area with mulch if required due to steep slopes or unsuitable weather conditions.

MAINTENANCE:
- Provide irrigation as required to establish growth and to maintain plant cover through duration of project.
- Reseed as necessary to provide 75% coverage
- Remediate any areas damaged by erosion or traffic.
- When 75% coverage is achieved

BMP: HOUSEKEEPING

Description
Promote efficient and safe housekeeping practices (storage, use, and cleanup) when handling potentially harmful materials such as fertilizers, pesticides, cleaning solutions, paint products, automotive products, and swimming pool chemicals. Related information is provided in BMP fact sheets SC-11 Spill Prevention, Control & Cleanup and SC-34 Waste Handling & Disposal.

Approach
Pollution Prevention

Purchase only the amount of material that will be needed for foreseeable use. In most cases this will result in cost savings in both purchasing and disposal. See SC-61 Safer Alternative Products for additional information.

Be aware of new products that may do the same job with less environmental risk and for less or the equivalent cost. Total cost must be used here; this includes purchase price transportation costs, storage costs, use related costs, clean up costs and disposal costs.

Suggested Protocols
General

Keep work sites clean and orderly. Remove debris in a timely fashion. Sweep the area.

Dispose of wash water, sweepings, and sediments, properly.

Recycle or dispose of fluids properly.

Establish a daily checklist of office, yard and plant areas to confirm cleanliness and adherence to proper storage and security. Specific employees should be assigned specific inspection responsibilities and given the authority to remedy any problems found.

Post waste disposal charts in appropriate locations detailing for each waste its hazardous nature (poison, corrosive, flammable), prohibitions on its disposal (dumpster, drain, sewer) and the recommended disposal method (recycle, sewer, burn, storage, landfill).

Summarize the chosen BMPs applicable to your operation

Require a signed checklist from every user of any hazardous material detailing amount taken, amount used, amount returned and disposal of spent material.

Do a before audit of your site to establish baseline conditions and regular subsequent audits to note any changes and whether conditions are improving or deteriorating.

Keep records of water, air and solid waste quantities and quality tests and their disposition.

Maintain a mass bance of incoming, outgoing and on hand materials so you know when there are unknown losses that need to be tracked down and accounted for.

Use and reward employee suggestions related to BMPs, hazards, pollution reduction, work place safety, cost reduction, alternative materials and procedures, recycling and disposal.

Have, and review regularly, a contingency plan for spills, leaks, weather extremes etc. Make sure all employees know about it and what their role is so that it comes into force automatically.

Training

Train all employees, management, office, yard, manufacturing, field and clerical in BMPs and pollution prevention and make them accountable.

Train municipal employees who handle potentially harmful materials in good housekeeping practices.

Train personnel who use pesticides in the proper use of the pesticides. The California Department of Pesticide Regulation license pesticide dealers, certify pesticide applicators and conduct onsite inspections.

Train employees and contractors in proper techniques for spill containment and cleanup. The employee should have the tools and knowledge to immediately begin cleaning up a spill if one should occur.

Spill Response and Prevention

Refer to SC-11, Spill Prevention, Control & Cleanup.

Keep your Spill Prevention Control and Countermeasure (SPCC) plant up-to-date, and implement accordingly.

Have spill cleanup materials readily available and in a known location.

Cleanup spills immediately and use dry methods if possible.

Properly dispose of spill cleanup material.

Other Considerations

There are no major limitations to this best management practice.

There are no regulatory requirements to this BMP. Existing regulations already require municipalities to properly store, use and dispose of hazardous materials.

Requirements
Costs

Minimal cost associated with this BMP. Implementation of good housekeeping practices may result in cost savings as these procedures may reduce the need for more costly BMPs.

Maintenance

Ongoing maintenance required to keep a clean site. Level of effort is a function of site size and type of activities.

Objectives
- Cover
- Contain
- Educate
- Reduce/Minimize
- Product Substitution

Targeted Constituents
- Sediment
- Nutrients
- Trash
- Metals
- Bacteria
- Oil and Grease
- Organics
- Oxygen Demanding

GILSON ENGINEERING
Consulting Engineers & Surveyors
12401 SOUTH 450 EAST BUILDING C, UNIT 2, DRAPER, UT 84020
PHONE: (801) 571-3414 FAX: (801) 571-9449

LICENSED PROFESSIONAL ENGINEER
03/18/2022
No. 362118
Bradley S. Gilson
STATE OF UTAH

REV/DATE | BY | COMMENTS | REVISIONS

1" SCALE MEASURES 1" ON FULL SIZE SHEET
ADJUST FOR HALF SIZE SHEETS

DATE: FEBRUARY 2022
DRAWING NAME: BMP DETAILS
DESIGNED/DRAWN BY: JM/BP
CHECKED: ---
APPROVED: ---

BMP DETAILS

TOP OF MOUNTAIN WATER SYSTEM
POWDER MOUNTAIN WATER & SEWER IMPROVEMENT DISTRICT
WEBER COUNTY, UTAH

REVISION: A
PROJ. # POW.019

ER.104

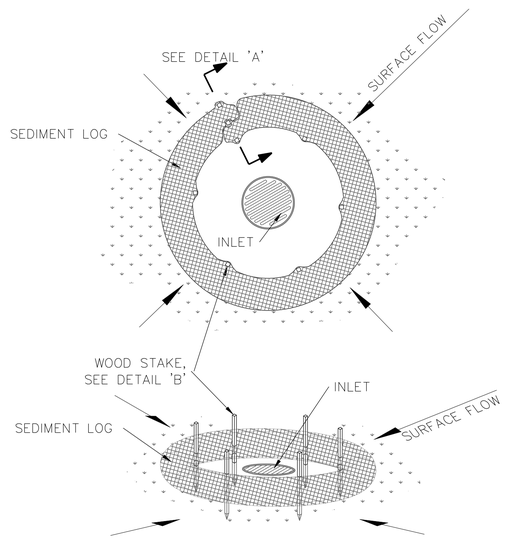

INLET

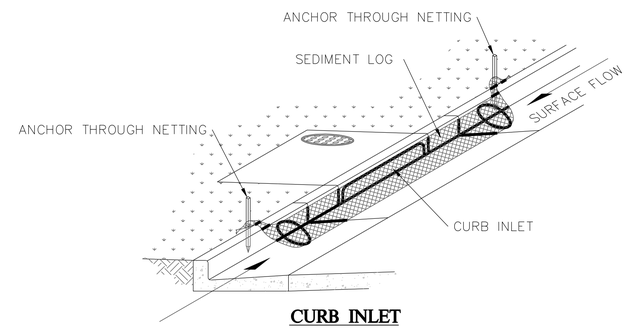

CURB INLET

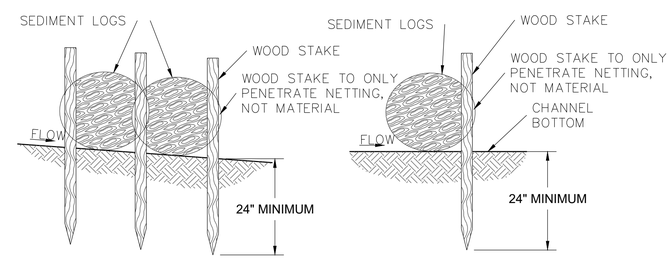

STAKING 'A' **STAKING 'B'**

INLET PROTECTION (3 / C.05)
SCALE: NTS

GILSON ENGINEERING
Consulting Engineers & Surveyors
12401 SOUTH 450 EAST BUILDING C, UNIT 2, DRAPER, UT 84020
PHONE: (801) 571-3414 FAX: (801) 571-9449

LICENSED PROFESSIONAL ENGINEER
03/18/2022
No. 362118
Bradley S. Gilson
STATE OF UTAH

POWDER MOUNTAIN WATER AND SEWER IMPROVEMENT DISTRICT

REV	DATE	BY	COMMENTS

REVISIONS

1" SCALE MEASURES 1" ON FULL SIZE SHEET
ADJUST FOR HALF SIZE SHEETS

DATE: FEBRUARY 2022
DRAWING NAME: BMP DETAILS
DESIGNED/DRAWN BY: JM/BP
CHECKED: ---
APPROVED: ---

BMP DETAILS

TOP OF MOUNTAIN WATER SYSTEM
POWDER MOUNTAIN WATER & SEWER IMPROVEMENT DISTRICT
WEBER COUNTY, UTAH

REVISION: A
PROJ. # POW.019

ER.105