SECTION 00100

INVITATION TO BID

POWDER MOUNTAIN WATER AND SEWER IMPROVEMENT DISTRICT
298 24th Street, Suite 150
Ogden, Utah 84401

Sealed BIDS for construction of the "350,000 GALLON WATER TANK PROJECT, LOCATED AT POWDER MOUNTAIN, UTAH --- PROJECT # PWM.010 - PHASE 6", will be received by the DISTRICT at the at the office of the DISTRICT ENGINEER, 12401 South 450 East, Unit C2, Draper, Utah 84020, until 2:00 PM, MARCH 30 , 2021; and then at said office publicly opened and read aloud. Due to current circumstances reading of the BIDS will be broadcast Via ZOOM Meeting (Meeting ID and Passcode; To Be Provided to all on BIDDERS LIST).

The Work includes furnishing all labor, tools, materials, equipment, transportation and services required for the construction of the above described project; and consists of the following items of work: mobilization; all required earthwork, including general, structural, and trench excavation, backfill, embankments, and compaction; rock excavation; exporting excess excavated materials; borrow for gravel base for tank, trench backfill, pipe bedding and riprap; gravel surfacing for access and perimeter roads; furnishing and installing 12-inch, 10-inch and 6-inch pressure pipe and fittings; connecting project pipes to existing pipe lines; constructing reinforced concrete water storage tank, complete, including metal work, coatings and painting; furnishing and installing plumbing system for tank; furnishing and placing erosion control mats and native grass seed; and all appurtenant work; all in accordance with Drawings and Specifications prepared by the Engineer; Gilson Engineering.

CONTRACT DOCUMENTS may be examined at the office of Gilson Engineering, 12401 South 450 East, Bldg. C-2, Draper, Utah.

CONTRACT DOCUMENTS can be reviewed and downloaded from DISTRICT (https://www.pmwsid.org/) website or provided via email request to Gilson Engineering at debbie@gilsonengineering.com.

Bid must be accompanied by a Bid Bond, Certified Check or Cashier's Check in the amount of 5% of the maximum bid price, drawn payable to the order of POWDER MOUNTAIN WATER AND SEWER IMPROVEMENT DISTRICT.

.

All Bids submitted shall be in conformance with the Instructions to Bidders which are included in the Contract Documents; and shall be guaranteed by the Bidder for a period of ninety (90) days from the date of Bid opening.

The District hereby reserves the right to reject any or all bids presented, to waive any informality in a bid, and to make award or refuse to make award in the interest of the DISTRICT.

Date:_____ By: _____.

CONTRACT DOCUMENTS
FOR
350,000 GALLON WATER TANK LOCATED AT

POWDER MOUNTAIN WATER AND SEWER IMPROVEMENT DISTRICT
POWDER MOUNTAIN, UTAH

PROJECT NO. PWM.010.20 (PHASE VI)

MARCH 2021

GILSON ENGINEERING, INC. CONSULTING ENGINEERS AND SURVEYORS

Prepared _____ James J. Milligan, P.E.

Checked _____

Approved _____ Bradley S. Gilson, P.E.

12401 South 450 East
Building C, Unit 2
Draper, Utah 84020
Phone: 801-571-9414

TABLE OF CONTENTS PAGE

00100 - Invitation To Bid 00100-1

00200 - Instructions to Bidders . . . . . 00200-1 thru 00200-4

00260 - Contractor's Qualification and Experience Affidavit . . . . . 00260-1 thru 00260-4

00410 - Bid 00410-1

00420 - Bid Schedule . . . . . 00420-1 thru 00420-7

00450 - Bid Bond . . . . . 00450-1 and 00450-2

00500 - Agreement . . . . . 00500-1 thru 00500-3

00510 - Payment Bond . . . . . 00510-1 and 00510-2

00520 - Performance Bond . . . . . 00520-1 and 00520-2

00530 - Notice of Award 00530-1

00540 - Notice to Proceed 00540-1

00560 - Change Order 00560-1

00570 - Notice of Substantial Completion 00570-1

00580 - Notice of Completion 00580-1

00700 - General Conditions
(Table of Contents Preceding)

Technical Specifications (Table of Contents Preceding)

Drawings (Enumerated in Supplemental General Conditions)

SECTION 00100

INVITATION TO BID

POWDER MOUNTAIN WATER AND SEWER IMPROVEMENT DISTRICT
298 24th Street, Suite 150
Ogden, Utah 84401

Sealed BIDS for construction of the "350,000 GALLON WATER TANK PROJECT, LOCATED AT POWDER MOUNTAIN, UTAH --- PROJECT # PWM.010 - PHASE 6", will be received by the DISTRICT at the at the office of the DISTRICT ENGINEER, 12401 South 450 East, Unit C2, Draper, Utah 84020, until 2:00 PM, MARCH 30 , 2021; and then at said office publicly opened and read aloud. Due to current circumstances reading of the BIDS will be broadcast Via ZOOM Meeting (Meeting ID and Passcode; To Be Provided to all on BIDDERS LIST).

The Work includes furnishing all labor, tools, materials, equipment, transportation and services required for the construction of the above described project; and consists of the following items of work: mobilization; all required earthwork, including general, structural, and trench excavation, backfill, embankments, and compaction; rock excavation; exporting excess excavated materials; borrow for gravel base for tank, trench backfill, pipe bedding and riprap; gravel surfacing for access and perimeter roads; furnishing and installing 12-inch, 10-inch and 6-inch pressure pipe and fittings; connecting project pipes to existing pipe lines; constructing reinforced concrete water storage tank, complete, including metal work, coatings and painting; furnishing and installing plumbing system for tank; furnishing and placing erosion control mats and native grass seed; and all appurtenant work; all in accordance with Drawings and Specifications prepared by the Engineer; Gilson Engineering.

CONTRACT DOCUMENTS may be examined at the office of Gilson Engineering, 12401 South 450 East, Bldg. C-2, Draper, Utah.

CONTRACT DOCUMENTS can be reviewed and downloaded from DISTRICT (https://www.pmwsid.org/) website or provided via email request to Gilson Engineering at debbie@gilsonengineering.com.

Bid must be accompanied by a Bid Bond, Certified Check or Cashier's Check in the amount of 5% of the maximum bid price, drawn payable to the order of POWDER MOUNTAIN WATER AND SEWER IMPROVEMENT DISTRICT.

.

All Bids submitted shall be in conformance with the Instructions to Bidders which are included in the Contract Documents; and shall be guaranteed by the Bidder for a period of ninety (90) days from the date of Bid opening.

The District hereby reserves the right to reject any or all bids presented, to waive any informality in a bid, and to make award or refuse to make award in the interest of the DISTRICT.

Date:_____ By: _____.

SECTION 00200

INSTRUCTIONS TO BIDDERS

1. DEFINITION OF TERMS.

a. Bidder. One who submits a BID for the WORK directly to the OWNER; distinct from a sub-bidder who submits a bid to a Bidder.

b. Successful Bidder. The lowest, qualified, responsible and responsive BIDDER to whom the OWNER, on the basis of the Owner's evaluation as hereinafter provided, makes an award.

c. Bidding Documents. Documents includes the INVITATION TO BID, INSTRUCTIONS TO BIDDERS, the BID Form, and the proposed Contract Documents (including all Addenda issued prior to receipt of Bids).

d. Owner. The OWNER is the Powder Mountain Water and Sewer Improvement District, located at 298 24th Street Suite 150, Ogden, Utah 84401.

e. Project Engineer. The PROJECT ENGINEER is Gilson Engineering, located at 12401 South 450 East, Building C-2, Draper, Utah 84020.

2. BIDDING DOCUMENTS. Complete sets of BIDDING DOCUMENTS may be obtained as provided in the INVITATION TO BID. These BIDDING DOCUMENTS must be used in preparing BIDS; the OWNER does not assume any responsibility for errors or misinterpretations resulting from the use of incomplete sets of BIDDING DOCUMENTS.

3. EXAMINATION OF CONTRACT DOCUMENTS AND SITE OF WORK. Before submitting a BID, each BIDDER shall:

a. carefully examine the specifications, drawings, and other Contract Documents;

b. visit the site of the Work to become familiar with local conditions that may affect costs, progress, performance, or furnishing of the Work;

c. consider federal, state and local laws, rules and regulations that may affect costs, progress, performance, or furnishing of the Work;

d. study and carefully correlate Bidder's observations with the Contract Documents; and

e. give written notice of all conflicts, errors, or discrepancies in the Contract Documents.

The failure or omission of the BIDDER to do any of the foregoing shall in no way relieve any BIDDER from any obligation in respect to his BID.

If any BIDDER, contemplating submitting a BID for the WORK, is in doubt as to the meaning of any part of the proposed Contract Documents, or finds any discrepancies therein, such BIDDER may submit to the ENGINEER a written request for interpretation thereof no later than five (5) day prior to the date set for opening of BIDS. The BIDDER submitting such request shall be responsible for its prompt and timely delivery to the ENGINEER. Any interpretation or correction of proposed Contract Documents will be made only by Addendum; and will be mailed or delivered to each prospective Bidder of record. The OWNER will not be responsible for any other explanations or interpretations of the proposed Contract Documents.

Any reports, estimates or test results provided to BIDDERS by the OWNER or the ENGINEER are not part of the Contract Documents; and the BIDDER shall make his own interpretations, estimates, inspections, or opinions concerning matters contained therein or pertaining to the completeness thereof for the purposes of bidding on the WORK. BIDDERS shall visit the site of the WORK; and shall conduct such inspections, explorations and tests as each

BIDDER deems necessary for submission of a BID. Such examinations, investigations, explorations and tests shall be

performed at the BIDDER's own expense. BIDDERS shall fill all holes, cleanup and restore the site to its former condition upon completion of any such explorations or tests. BIDDERS must satisfy themselves of the accuracy of the estimated quantities shown in the BID SCHEDULE. Inspection trips for prospective BIDDERS may be arranged by contacting the ENGINEER, phone # 801-571-9414. Submission of a BID will constitute an express representation by the BIDDER that the BIDDER has complied with every requirement of this paragraph. After the BID has been submitted, the BIDDER shall not assert that there was a misunderstanding concerning the quantities of work to be done. Without exception, the BID is premised upon performing and furnishing the WORK required by the Contract Documents and any methods or procedures required therein.

4. BID SECURITY. Each BID must be accompanied by BID Security made payable to the OWNER in an amount of five (5) percent of the BIDDER's maximum BID price; and in the form of either a BID BOND issued by a surety acceptable to the Owner, a certified check or a cashier's check. BID Security of the Successful BIDDER will be retained until such BIDDER has executed the AGREEMENT and has furnished the required Contract Security and evidence of Insurance; whereupon the BID Security will be returned. If the Successful BIDDER fails to execute and deliver the AGREEMENT, BONDS, and evidence of Insurance within five (5) days after NOTICE OF AWARD, The OWNER may annul the NOTICE OF AWARD and the BID Security of that BIDDER will be forfeited. The BID Security of all other Bidders whom the OWNER believes to have a reasonable chance of receiving the award may be retained by the OWNER until three (3) days after the effective date of the AGREEMENT. BID Security submitted with BIDS which are not competitive will be returned within ten (10) days after the date of the BID opening.

5. CONTRACT TIME AND LIQUIDATED DAMAGES. The AGREEMENT will include the requirement that the WORK be completed in One Hundred Sixty (160) calendar days after the date of the NOTICE TO PROCEED. The AGREEMENT will include a stipulation that liquidated damages will be assessed in the amount of $ 600.00 per calendar day for each calendar day after the agreed completion date that the WORK is not fully certified by the DISTRICT ENGINEER as being substantially complete as defined in the Contract Documents. After the Substantial Completion, Work must be completed within 20 calendar days or Liquidated Damages will be charged at $600.00 per calendar day.

6. FORM OF BID. All BIDS shall be made on the BID Forms included with the Bidding Documents. All blank on the BID Form must be completed in ink or typewritten. No additions, deletions, or alterations shall be made to the BID Form. Any unauthorized conditions, limitations, qualifications or provisions attached to the BID may render the BID unresponsive and may cause its rejection. No telegraphic Bid or telegraphic modification of a Bid will be considered.

BIDS by corporations must be executed in the corporate name by the president or vice-president or other authorized corporate officer, accompanied by evidence of authority to sign, and the corporate seal should be affixed thereto. BIDS by partnerships shall be executed in the partnership's name and signed by a partner having authority on behalf of the partnership. All BIDS submitted must be signed by the BIDDER or the BIDDER's authorized representative. All names should be typed or printed below the signature. The BID shall contain an acknowledgment of receipt of all ADDENDA (the numbers of which must be filled in on the Bid Form). The address and telephone number of the BIDDER must be shown for communications regarding the BID.

7. SUBMISSION OF BIDS. BIDS shall be submitted at the time and place indicated in the INVITATION TO BID. BIDS shall be enclosed in a sealed envelope addressed to POWDER MOUNTAIN WATER AND SEWER IMPROVEMENT DISTRICT; and marked on the outside with "PUMPHOUSE #1 STATION PROJECT" # PWM.010.20 - PHASE II"; and the name, address, and license number of the BIDDER. BID must be accompanied by the Bid Security and all other required documents. Only the original signed copy of the BID shall be submitted. If forwarded by mail, the sealed envelope containing the BID must be enclosed in another envelope addressed to the OWNER at PO Box 6156 Clearfield, Utah 84089-6156. Any Bids received after the scheduled closing time for receipt of BIDS will not be accepted or considered and will be returned to the BIDDER unopened.

8. MODIFICATION AND WITHDRAWAL OF BIDS. BIDS may be modified or withdrawn by the BIDDER by means of a written request, signed by the BIDDER or his duly authorized representative. Such written request must be delivered to the place stipulated in the INVITATION TO BID for receipt of BIDS prior to the opening of BIDS or authorized postponement thereof.

If, within twenty-four (24) hours after BIDS are opened, any BIDDER files a duly signed, written notice with the OWNER and promptly thereafter demonstrates to the reasonable satisfaction of the OWNER that there was a material and substantial mistake in the preparation on its BID, that BIDDER may withdraw its BID and the BID Security will be returned. Thereafter, that BIDDER will be disqualified from further bidding on the WORK to be provided under the Contract Documents.

Except as provided above, no BIDDER may withdraw a BID within sixty (60) days after the actual date of the opening thereof. Should there be reasons why the contract cannot be awarded within the specified period, the time may be extended by mutual agreement between the OWNER and the BIDDER.

9. OPENING OF BIDS. BIDS will be opened as indicated in the INVITATION TO BID and, unless obviously non-responsive, read aloud publicly. All BIDS will remain subject to acceptance for sixty (60) days after the day of the BID Opening; but the OWNER may, in its sole discretion, release any BID and return the BID Security prior to that date.

10. DETERMINATION OF BID AMOUNT. Determination of the total amount of the BID shall be based on the correct extension and addition of BID SCHEDULE items. Discrepancies in the multiplication of units of work and unit prices will be resolved in favor of the unit prices. Discrepancies between the indicated sum of any column of any figures and the correct sum thereof will be resolved in favor of the correct sum.

11. AWARD OF CONTRACT. The OWNER reserves the right to reject any and all BIDS, to waive any and all informalities not involving price, time, or changes in the WORK, and to negotiate contract terms with the Successful BIDDER; and the right to disregard all nonconforming, non-responsive, unbalanced, or conditional BIDS. The OWNER further reserves the right to reject the BID of any BIDDER if the OWNER believes it would not be in the best interest of the Project to make an award to that BIDDER, whether because that BID is non-responsive or the BIDDER is unqualified or of doubtful financial ability or fails to meet any other pertinent standards or criteria established by the OWNER.

To demonstrate qualifications to perform the work, each BIDDER must be prepared to submit, within five (5) days of the OWNER's request, written evidence, such as financial statements, previous work experience, present commitments, and other such information and data as may be required. BIDDERS must hold an appropriate, valid Contractor's license and be properly qualified to do business in the PROJECT area.

The OWNER may consider the qualifications and experience of sub-contractors, suppliers and other organizations or persons proposed for portions of the WORK. The apparent low BIDDER shall supply the names and addresses of suppliers, subcontractors and other persons for portions of the work when requested to do so by the OWNER. The OWNER may also consider the operating costs, maintenance requirements, performance data, and guarantees of major items of the materials and equipment proposed for incorporation into the WORK when such data is required to be submitted prior to the NOTICE OF AWARD.

The OWNER may conduct such investigations as the OWNER deems necessary or desirable to assist in the evaluation of any BID to establish the responsibility, qualifications and financial ability of BIDDER, proposed subcontractors, suppliers, and other persons and organizations to perform and furnish the WORK in accordance with the Contract Documents to the OWNER's satisfaction within the prescribed time.

If the Contract is to be awarded, it will be awarded to the lowest, responsible BIDDER whose evaluation by the OWNER indicates to the OWNER that the award will be in the best interest of the DISTRICT.

If the Contract is to be awarded, the OWNER will give the Successful BIDDER a NOTICE OF AWARD within sixty (60) days after the date of the BID opening, unless a longer waiting period before award is expressly provided in the INVITATION TO BID.

12. EXECUTION OF AGREEMENT. The form of AGREEMENT which the Successful BIDDER will be required to execute is included in the Contract Documents. The BIDDER to whom the AWARD OF CONTRACT is made shall, within TEN (10) calendar days after the NOTICE OF AWARD from the OWNER, execute the AGREEMENT on the form provided, secure and furnish to the OWNER all insurance and all bonds required by the Contract Documents and the signed AGREEMENT. All bonds and certificates of insurance shall be submitted to and approved by the OWNER before the Successful BIDDER may proceed with the WORK. Failure or refusal to enter into and deliver the AGREEMENT as herein provided or to comply with any of the requirements connected thereto shall be just cause for annulment of the award and the forfeiture of the BID security. If the Successful BIDDER refuses or fails to execute the AGREEMENT, the OWNER may award the Contract to the next lowest, responsible BIDDER.

13. CONTRACT SECURITY. When the Successful BIDDER delivers the executed AGREEMENT to the OWNER, it must be accompanied by the required Labor and Materials PAYMENT BOND and a PERFORMANCE BOND, each in the amount of ONE HUNDRED (100) PERCENT of the Contract Price and each on the forms provided in the Contract Documents or accepted form. These BONDS shall be issued by a surety acceptable to the Owner and

the cost of such BONDS shall be included in the BID. Attorneys-in-fact who sign BID BONDS or PAYMENT BONDS and PERFORMANCE BONDS must file with each BOND a certified and effective dated copy of their Power-of-Attorney.

14. INSURANCE. When the Successful BIDDER delivers the executed AGREEMENT to the OWNER, it must be accompanied by the required insurance as evidenced by certificates of insurance issued by a reputable insurance company acceptable to the Owner.

15. EXECUTION BY OWNER. Within TEN (10) calendar days of receipt of the signed AGREEMENT from the Successful BIDDER, together with the required Contract Security and insurance in a form acceptable to the OWNER, the OWNER shall cause its duly authorized representative to execute the AGREEMENT and the OWNER shall deliver one fully signed AGREEMENT to the Successful BIDDER. Each counterpart of the AGREEMENT shall be executed by the OWNER and the Successful BIDDER.

16. NOTICE TO PROCEED. A NOTICE TO PROCEED shall be issued within TEN (10) day of the execution of the AGREEMENT by the OWNER. Should there be reasons why the NOTICE TO PROCEED cannot be issued within such period, the time may be extended by mutual agreement between the OWNER and CONTRACTOR. If the NOTICE TO PROCEED has not been issued within the TEN (10) day period or within the period mutually agreed upon, the CONTRACTOR may terminate the AGREEMENT without further liability on the part of either party.

17. CLAIMS BY BIDDER. By submitting a BID, each BIDDER agrees to waive any claim it has or may have against the OWNER, the Engineer, and their respective employees, arising out of or in connection with the administration, evaluation or recommendations of any BID.

SECTION 00260

CONTRACTOR'S QUALIFICATION AND EXPERIENCE AFFIDAVIT

The BIDDER shall furnish all of the following information. Failure to comply with this requirement will render the BID non-responsive and will cause its rejection. Additional sheets shall be attached as required.

Award of Contract will be based upon review and evaluation of this Affidavit.

A. Contractor's name and address:

_____

_____

_____

B. Contractor's Telephone Number: _____ Fax _____

C. Contractor's Email Address: _____

D. Contractor's License: Primary Classification _____

State License No. _____

Supplemental Classification held, if any: _____

E. Number of years as a contractor in Construction Work of this type: _____

F. Names and titles of Principal Officers of Contractor's Firm:

_____ Name	_____ Title
_____ Name	_____ Title
_____ Name	_____ Title
_____ Name	_____ Title

G. Name of person who inspected site of proposed work for your firm:

Name: _____ Date of Inspection: _____

H. Name, address, and telephone number of surety company and agent who will provide the required bonds on this Contract:

_____

_____

I. List of current jobs now under construction:

Client	Telephone No.	Dollar Amount.	Type of Job
_____	_____	_____	_____
_____	_____	_____	_____
_____	_____	_____	_____
_____	_____	_____	_____
_____	_____	_____	_____
_____	_____	_____	_____

J. List two projects of this size and complexity completed within the last five years:

Client	Telephone No.	Dollar Amount.	Type of Job
_____	_____	_____	_____
_____	_____	_____	_____
_____	_____	_____	_____

K. List history of similar projects with the Powder Mountain Water and Sewer Improvement District (PMWSID):

Project	Project History	Was District Satisfied with Work?
_____	_____	_____
_____	_____	_____
_____	_____	_____

L. List History of Product to be used on the Project:

_____

_____

M. List History of service for Product to be used on the Project:

_____

_____

N. Have you ever failed to complete any work awarded to your company? If so, when, where and why?

_____

O. List your major equipment available for this Contract:

_____ _____

_____ _____

_____ _____

_____ _____

_____ _____

P. List projects that you have failed to complete on the original schedule over the past two years:

Client	Telephone No.	Dollar Amount.	Type of Job

Q. List projects that you have failed to complete on the adjusted schedule over the past two years:

Client	Telephone No.	Dollar Amount.	Type of Job

R. Submit a copy of OSHA 300 for the past two years.

S. Submit a copy of citation history from OSHA for past two years.

T. Have you had any problems with OSHA in the last two years? If so, identify the problems and specify how the problems were resolved.

U. Are you in compliance with all applicable laws and governmental regulations? _____

V. Will you complete the project on time, as specified? _____

LIST OF SUBCONTRACTORS

The BIDDER shall list below the names and business address of each subcontractor who will perform Work under this Contract in excess of five percent (0.05) of the total bid price; and shall also list the portion of the Work which will be done by such subcontractor. After the opening of proposals, no changes or substitutions will be allowed without the written approval of the Engineer. Note: Attach additional sheets if required.

	WORK TO BE PERFORMED	SUBCONTRACTOR'S NAME AND ADDRESS
1.	_____	_____
	_____	_____
2.	_____	_____
	_____	_____
3.	_____	_____
	_____	_____
4.	_____	_____
	_____	_____
5.	_____	_____
	_____	_____
6.	_____	_____
	_____	_____

Respectively Submitted:

_____	_____
Signature	Address
_____	_____
Title	Date
_____	_____
Contractor License No.	Taxpayer Identification No.

SECTION 00410

BID

Proposal of _____ (hereinafter called "BIDDER"), organized and existing under the laws of the State of _____ doing business as _____.*

To POWDER MOUNTAIN WATER AND SEWER IMPROVEMENT DISTRICT, (hereinafter called "OWNER").

Hereby proposes to perform all WORK for construction of the "350,000 GALLON WATER TANK --- PROJECT (PHASE 6) # PMW.010.19, in strict accordance with the CONTRACT DOCUMENTS and DISTRICT'S TECHNICAL SPECIFICATIONS AND DRAWINGS, within the time set forth therein, and at the prices stated herein.

By submission of this BID, each BIDDER certifies, and in the case of a joint BID each party thereto certifies as to his own organization, that this BID has been arrived at independently, without consultation, communication, or agreement as to any matter relating to this BID with any other BIDDER or with any competitor.

BIDDER hereby agrees to commence WORK under this contract on or before a date to be specified in the NOTICE TO PROCEED and to fully complete the PROJECT within ONE HUNDRED SIXTY (160) calendar days thereafter. BIDDER further agrees to pay as liquidated damages, the sum of $ 600.00 for each calendar day thereafter.

BIDDER acknowledges receipt of the following ADDENDUM:

ADDENDUM #1

* Insert "a corporation", "a partnership"' or "an individual" as applicable.

00420 BID SCHEDULE

3/10/2021

350,000 GALLON WATER TANK PROJECT (PHASE 6)

NO.	ITEM	QTY	UNIT	UNIT PRICE	BID TOTAL
6.1	MOBILIZATION	1	LUMP		
6.2	CONSTRUCT AND MAINTAIN EROSION CONTROL: BMP'S	1	LUMP		
6.3	GENERAL SITE WORK, COMPLETE INCLUDING CLEARING AND GRUBBING, GENERAL EXCAVATION, GRADING, BACKFILL, AND ALL APPURTENANT WORK	1	LUMP		
6.4	COMPLETE INVESTIGATIVE POTHOLES TO LOCATE EXISTING WATER PIPELINE, UTILITY CROSSINGS, AND OTHER MISC. UTILITIES REQUIRED, COMPLETE	6	EA		
6.5	STRUCTURAL EARTHWORK FOR CONCRETE WATER TANK, COMPLETE	1	LUMP		
6.6	ROCK EXCAVATION FOR REMOVING LARGE ROCK AND APPURTENANT ITEMS	200	CY		
6.7	FURNISH AND INSTALL EPDM MEMBRANE (45 MIL) LINER UNDER TANK, COMPLETE	5600	SQ FT		
6.8	FURNISH, PLACE, AND COMPACT GRAVEL BASE MATERIAL FOR WATER TANK, COMPLETE	250	CY		
6.9	FURNISH AND INSTALL 12-INCH DIAMETER DUCTILE IRON (CL 250) CULINARY WATER PIPE FOR TANK OVERFLOW AND DRAIN FROM TANK TO DRAIN BOX, COMPLETE	80	LF		
6.10	FURNISH AND INSTALL 12-INCH DIAMETER DUCTILE IRON (CL 250) CULINARY WATER PIPE FOR TANK SUPPLY/DISTRIBUTION, COMPLETE	20	LF		
6.11	FURNISH AND INSTALL 6-INCH DIAMETER DUCTILE IRON (CL 250) CULINARY WATER PIPE FOR TANK FLOOR DRAIN, COMPLETE	30	LF		
6.12	FURNISH AND INSTALL 12-INCH DIAMETER PVC (SDR-35) FROM DRAIN BOX TO EXISTING DRAIN BOX, COMPLETE	470	LF		
6.13	FURNISH AND INSTALL 6-INCH DIAMETER HDPE (DR 21) DRAIN PIPE , CORRUGATED WITH SMOOTH WALL INTERIOR (SOLID AND/OR PERFORATED PER PLAN) FOR TANK UNDERDRAIN, COMPLETE	440	LF		
6.14	FURNISH AND INSTALL 3-INCH DIAMETER PVC (SDR-35) FROM VALVE VAULT FLOOR DRAIN TO DRAIN BOX, COMPLETE	60	LF		
6.15	CONSTRUCT REINFORCED CONCRETE VALVE VAULT, COMPLETE	1	LUMP		
6.16	CONSTRUCT 350,000 GALLON REINFORCED CONCRETE WATER STORAGE TANK, COMPLETE	1	LUMP		
6.17	FURNISH AND INSTALL PLUMBING SYSTEM FOR NEW WATER TANK, COMPLETE	1	LUMP		
6.18	FURNISH AND INSTALL PLUMBING SYSTEM FOR VALVE VAULT, COMPLETE	1	LUMP		

BIDDER agrees to perform all the work described in the CONTRACT DOCUMENTS for the following unit prices or lump sum prices.

NOTE: BIDS shall include sales tax and all other applicable taxes and fees.

00420 BID SCHEDULE

3/10/2021

350,000 GALLON WATER TANK PROJECT (PHASE 6)

NO.	ITEM	QTY	UNIT	UNIT PRICE	BID TOTAL
6.19	FURNISH AND INSTALL ELECTRICAL SYSTEMS FOR WATER TANK AND VALVE VAULT, COMPLETE	1	LUMP		
6.20	FURNISH AND INSTALL SCADA SYSTEMS FOR NEW WATER TANK AND VALVE VAULT, COMPLETE	1	LUMP		
6.21	FURNISH AND INSTALL THREE (3); 2-INCH DIA. SCH. 40 PVC ELECTRICAL CONDUIT AND #12 CONDUCTORS, COMPLETE, IN JOINT TRENCH, FOR UNDERGROUND POWER LINES; FROM THE RMP METER PEDESTAL TO THE NEW CONTROL PANEL; INCLUDING TRENCHING AND ALL APPURTENANT WORK	480	LF		
6.22	FURNISH AND INSTALL ONE (1); 4-INCH DIA. SCH. 40 PVC ELECTRICAL CONDUIT AND #10 CONDUCTORS, COMPLETE, IN JOINT TRENCH, FOR UNDERGROUND POWER LINE FROM THE RMP METER PEDESTAL TO THE NEW CONTROL PANEL; INCLUDING TRENCHING AND ALL APPURTENANT WORK	480	LF		
6.23	FURNISH AND INSTALL ELECTRICAL JUNCTION (PULL) BOXES	4	EACH		
6.24	CONSTRUCT ELECTRICAL CONTROL PEDESTAL, COMPLETE	1	LUMP		
6.25	CONNECT NEW ELECTRICAL SYSTEM TO EXISTING ROCKY MOUNTAIN POWER SYSTEM, COMPLETE	1	LUMP		
6.26	INSTALL SCADA PEDESTAL, COMPLETE	1	LUMP		
6.27	FURNISH AND INSTALL 1-1/2-INCH DIA. SCH. 40 PVC ELECTRICAL CONDUIT AND #16 CONDUCTORS FOR CONTROL AND SCADA LINES; INCLUDING ALL REQUIRED EARTHWORK, TRENCHING, AND ALL APPURTENANT WORK	200	LF		
6.28	FURNISH AND INSTALL 4'x4' DRAIN BOX WITH GRATE, FOR TANK DRAINS, COMPLETE	2	EACH		
6.29	CONNECT NEW 12" DRAIN LINE TO EXISTING DRAIN BOX, COMPLETE	1	LUMP		
6.30	FURNISH AND PLACE LANDSCAPING BOULDERS, COMPLETE	60	EACH		
6.31	CONSTRUCT CONCRETE HEADWALL FOR 12" DRAIN AT DRAIN BOX	1	LUMP		
6.32	FURNISH AND PLACE EROSION CONTROL MATS AND NATIVE GRASS SEED, COMPLETE, ON SURFACES OF CUTS AND EMBANKMENTS	20000	SQ FT		
6.33	FURNISH AND PLACE NATIVE SEED MIX, OVER TOP OF TANK AND OTHER LEVEL DISTURBED AREAS, COMPLETE	0.25	ACRE		
				TOTAL BID	

SECTION 00500

AGREEMENT

THIS AGREEMENT, made this__ day of _____, 2021, by and between the __POWDER MOUNTAIN WATER AND SEWER IMPROVEMENT DISTRICT__, hereinafter called "OWNER" and _ _ doing business as __ _, hereinafter called "CONTRACTOR".

WITNESSETH: That for and in consideration of the payments and agreements hereinafter mentioned:

1. The CONTRACTOR will commence and complete construction of the "350,000 GALLON WATER TANK --- PROJECT # PMW.010.20 – PHASE 6".

2. The CONTRACTOR will furnish all of materials, supplies, tools, equipment, labor and other services necessary for the construction and completion of the PROJECTS described herein.

3. The CONTRACTOR will commence the WORK required by the CONTRACT DOCUMENTS within SEVEN (7) calendar days after the date of the NOTICE TO PROCEED; and will complete the same within ONE HUNDRED SIXTY (160) calendar days after the date of the NOTICE TO PROCEED; unless the period for completion is extended otherwise by the CONTRACT DOCUMENTS.

4. The CONTRACTOR agrees to perform all of the WORK described in the CONTRACT DOCUMENTS and comply with the terms therein for the sum as shown in the BID schedule.

5. The term "CONTRACT DOCUMENTS" means and includes the following:

(A) SECTION 00410 - BID
(B) SECTION 00420 - BID SCHEDULE
(C) SECTION 00450 - BID BOND
(C) SECTION 00500 – AGREEMENT
(D) SECTION 00510 – PAYMENT BOND
(E) SECTION 00520 – PERFORMANCE BOND
(K) SECTION 00530 - NOTICE OF AWARD
(L) SECTION 00540 - NOTICE TO PROCEED
(M) SECTION 00560 - CHANGE ORDER
(N) SECTION 00570 - NOTICE OF SUBSTANTIAL COMPLETION
(O) SECTION 00580 - NOTICE OF COMPLETION
(P) GENERAL CONDITIONS
(Q) SUPPLEMENTAL GENERAL CONDITIONS
(D) SPECIFICATIONS prepared and issued by GILSON ENGINEERING, Consulting Engineers, dated JANUARY, 2021.

(E) DRAWINGS prepared by Gilson Engineering, Consulting Engineers
(See enumeration in Supplemental General Conditions)

(F) ADDENDA:

No. 1 dated March 23, 2021.

6. The OWNER will pay to the CONTRACTOR, in the manner and at such times as set forth in the General Conditions, such amounts as required by the CONTRACT DOCUMENTS.

7. This Agreement shall be binding upon all parties hereto and their respective heirs, executors, administrators, successors, and assigns.

IN WITNESS WHEREOF, the parties hereto have executed, or caused to be executed by their duly authorized officials, this Agreement in five (5) copies, each of which shall be deemed an original on the date first above written.

OWNER:

_____

BY _____

NAME _____
(Please Type)

TITLE _____

(SEAL)

ATTEST:

_____

NAME _____
(Please Type)

TITLE _____

CONTRACTOR:

_____

BY _____

NAME _____
(Please Type)

ADDRESS _____

_____

(SEAL)

ATTEST:

_____

NAME _____
(Please Type)

TITLE_____

SECTION 00510 Bond Number:_____

PAYMENT BOND

CONTRACTOR (Name and Address):
_____
_____
_____

SURETY (Name and Principle Place of Business):
_____
_____
_____

OWNER (Name of Address):
_____
_____
_____

CONSTRUCTION CONTRACT
Date: _____
Amount: _____
Description (Name and Location): _____

BOND:
Date (Not earlier than Construction Contract Date): _____
Amount: _____

Modification to this Bond: ___ None ___ See Page 2

CONTRACTOR AS PRINCIPAL

Company: (Corporate Seal)
_____

Signature: _____

Name and Title: _____

SURETY

Company: (Corporate Seal)
_____

Signature: _____

Name and Title: _____

(Any additional signatures appear on Page 2)

(FOR INFORMATION ONLY -- Name, Address and Telephone)
AGENT or BROKER: _____
_____

OWNER'S REPRESENTATIVE (Architect, Engineer or other party): _____
_____

1. The Contractor and the Surety, jointly and severally, bind themselves, their heirs, executors, administrators, successors and assigns to the Owner to pay for labor, materials and equipment furnished for use in the performance of the Construction Contract, which is incorporated herein by reference.
2. With respect to the Owner, this obligation shall be null and void if the Contractor:
   2.1 Promptly makes payment, directly or indirectly, for all sums due Claimants, and
   2.2 Defends, indemnifies and holds harmless the Owner from claims, demands, liens or suits by any person or entity whose claim, demand, lien or suit is for the payment of labor, materials or equipment furnished for use in the performance of the Construction Contract, provided the Owner has promptly notified the Contractor and the Surety (at the address described in Paragraph 12) of any claims, demands, liens or suits and tendered defense of such claims, demands, liens or suits to the Contractor and the Surety, and provided there is no Owner Default.
3. With respect to Claimants, this obligation shall be null and void if the Contractor promptly makes payment, directly or indirectly, for all sums due.
4. The Surety shall have no obligation to Claimants under this Bond until:
   4.1 Claimants who are employed by or have a direct contract with the Contractor have given notice to the Surety (at the address described in Paragraph 12) and sent a copy, or notice thereof, to the Owner, stating that a claim is being made under this Bond and, with substantial accuracy, the amount of the claim.
   4.2 Claimants who do not have a direct contract with the Contractor:
      4.2.1 Have furnished written notice to the Contractor and sent a copy, or notice thereof, to the Owner, within 90 days after having last performed labor or last furnished materials or equipment included in the claim stating, with substantial accuracy, the amount of the claim and the name of the party to whom the material were furnished or supplied or for whom the labor was done or performed; and
      4.2.2 Have either received a rejection in whole or in part from the Contractor, or not received within 30 days of furnishing the above notice any communication from the Contractor by which the Contractor has indicated the claim will be paid directly or indirectly; and
      4.2.3 Not having been paid within the above 30 days, have sent a written notice to the Surety (at the address described in Paragraph 12) and sent a copy, or notice thereof, to the Owner, stating that a claim is being made under this Bond and enclosing a copy of the previous written notice furnished to the Contractor.
5. If a notice required by Paragraph 4 is given by the Owner to the Contractor or to the Surety, that is sufficient compliance.

6. When the Claimant has satisfied the conditions of Paragraph 4, the Surety shall promptly and at the Surety's expense take the following actions:
   6.1 Send an answer to the Claimant, with a copy to the Owner, within 45 days after receipt of the claim, stating the amounts that are undisputed and the basis for challenging any amounts that are disputed.
   6.2 Pay or arrange for payment of any undisputed amounts.
7. The Surety's total obligation shall not exceed the amount of this Bond, and the amount of this Bond shall be credited for any payments made in good faith by the Surety.
8. Amounts owed by the Owner to the Contractor under the Construction Contract shall be used for the performance of the Construction Contract and to satisfy claims, if any, under any Construction Performance Bond. By the Contractor furnishing and the Owner accepting this Bond, they agree that all funds earned by the Contractor in the performance of the Construction Contract are dedicated to satisfy obligations of the Contractor and the Surety under this Bond, subject to the Owner's priority to use the funds for the completion of the work.
9. The Surety shall not be liable to the Owner, Claimants or others for obligations of the Contractor that are unrelated to the Construction Contract. The Owner shall not be liable for payment of any costs or expenses of any Claimant under this Bond, and shall have under this Bond no obligation to make payments to, give notices on behalf of, or otherwise have obligations to Claimants under this Bond.
10. The Surety hereby waives notice of any change, including changes of time, to the Construction Contract or to related sub-contracts, purchase orders and other obligations.
11. No suit or action shall be commenced by a Claimant under this Bond other than in a court of competent jurisdiction in the location in which the work or part of the work is located or after the expiration of one year from the date (1) on which the Claimant gave the notice required by Subparagraph 4.1 or Clause 4.2.3, or (2) on which the last labor or service was performed by anyone or the last materials or equipment were furnished by anyone under the Construction Contract, whichever of (1) or (2) first occurs. If the provisions of this Paragraph are void or prohibited by law, the minimum period of limitation available to sureties as a defense in the jurisdiction of the suit shall be applicable.
12. Notice to the Surety, the Owner or the Contractor shall be mailed or delivered to the address shown on the signature page. Actual receipt of notice by Surety, the Owner or the Contractor, however accomplished, shall be sufficient compliance as of the date received at the address shown on the signature page.
13. When this Bond has been furnished to comply with a statutory or other legal requirement in the location where the construction was to be performed, any provision in this Bond conflicting with said statutory or legal requirement shall be deemed deleted herefrom and provisions conforming to such statutory or other legal requirement shall be deemed incorporated herein. The intent is that this Bond shall be construed as a statutory bond and not as a common law bond.
14. Upon request by any person or entity appearing to be a potential beneficiary of this Bond, the Contractor shall promptly furnish a copy of this Bond or shall permit a copy to be made.
15. DEFINITIONS:
   15.1 Claimant: An individual or entity having a direct contract with the Contractor or with a subcontractor of the Contractor to furnish labor, materials or equipment for use in the performance of the Contract. The intent of this Bond shall be to include without limitation in the terms "labor, materials or equipment" that part of water, gas, power, light, heat, oil, gasoline, telephone service or rental equipment used in the Construction Contract, architectural and engineering services required for performance of the work of the Contractor and the Contractor's subcontractors, and all other items for which a mechanic's lien may be asserted in the jurisdiction where the labor, materials or equipment were furnished.
   15.2 Construction Contract: The agreement between the Owner and the Contractor identified on the signature page, including all Contract Documents and changes thereto.
   15.3 Owner Default: Failure of the Owner, which has neither been remedied nor waived, to pay the Contractor as required by the Construction Contract or to perform and complete or comply with the other terms thereof.

MODIFICATIONS TO THIS BOND ARE AS FOLLOWS:

_____
_____
_____
_____
_____
_____

(Space is provided below for additional signatures of added parties, other than those appearing on the cover page.)

CONTRACTOR AS PRINCIPAL (Corporate Seal)	SURETY (Corporate Seal)
Company: _____	Company: _____
_____	_____
_____	_____
Signature: _____	Signature: _____
Name and Title: _____	Name and Title: _____
Address: _____	Address: _____
_____	_____
_____	_____

IMPORTANT – Surety companies executing bonds much appear on the Treasury Department's most current list (Circular 570, as amended) and be authorized to transact business in the State of UTAH.

SECTION 00520 Bond Number:_____

PERFORMANCE BOND

CONTRACTOR (Name and Address):
_____
_____
_____

SURETY (Name and Principle Place of Business):
_____
_____
_____

OWNER (Name of Address):
_____
_____
_____

CONSTRUCTION CONTRACT
Date: _____
Amount: _____
Description (Name and Location): _____

BOND:
Date (Not earlier than Construction Contract Date): _____
Amount: _____

Modification to this Bond: ___ None ___ See Page 2

CONTRACTOR AS PRINCIPAL

Company: (Corporate Seal)
_____

Signature: _____

Name and Title: _____

SURETY

Company: (Corporate Seal)
_____

Signature: _____

Name and Title: _____

(Any additional signatures appear on Page 2)

(FOR INFORMATION ONLY -- Name, Address and Telephone)
AGENT or BROKER: _____
_____

OWNER'S REPRESENTATIVE (Architect, Engineer or other party): _____
_____

1. The Contractor and the Surety, jointly and severally, bind themselves, their heirs, executors, administrators, successors and assigns to the Owner for the performance of the Construction Contract, which is incorporated herein by reference.
2. If the Contractor performs the Construction Contract, the Surety and the Contractor shall have no obligation under this Bond, except to participate in conferences as provided in Subparagraph 3.1:
3. If there is no Owner Default, the Surety's obligation under this Bond shall arise after:
   3.1 The Owner has notified the Contractor and the Surety at its address described in Paragraph 10 below that the Owner is considering declaring a Contractor Default and has requested and attempted to arrange a conference with the Contractor and the Surety to be held not later than fifteen days after receipt of such notice to discuss methods of performing the Construction Contract. If the Owner, the Contractor and the Surety agree, the Contractor shall be allowed a reasonable time to perform the Construction Contract, but such an arrangement shall not waive the Owner's right, if any, subsequently to declare a Contractor Default; and
   3.2 The Owner has declared a Contractor Default and formally terminated the Contractor's right to complete the contract. Such Contractor Default shall not be declared earlier than twenty days after the Contractor and Surety have received notice as provided in Subparagraph 3.1; and
   3.3 The Owner has agreed to pay the Balance of the Contract Price to the Surety in accordance with the terms of the Construction Contract or to a contractor selected to perform the Construction Contract in accordance with the terms of the contract with the Owner.
4. When the Owner has satisfied the conditions of Paragraph 3, the Surety shall promptly and at the Surety's expense take one of the following actions:
   4.1 Arrange for the Contractor with consent of the Owner, to perform and complete the Construction Contract; or
   4.2 Undertake to perform and complete the Construction Contract itself, through its agents or through independent contractors; or
   4.3 Obtain bids or negotiate proposals from qualified contractors acceptable to the Owner for a contract for performance and completion of the Construction Contract, arrange for a contract to be prepared for execution by the Owner and the contractor selected with the Owner's concurrence, to be secured with performance and payment bonds executed by a qualified surety equivalent to the bonds issued on the Construction Contract, and pay to the Owner the amount of damages as described in Paragraph 6 in excess of the Balance of the Contract Price incurred by the Owner resulting from the Contractor's default; or

4.4 Waive its right to perform and complete, arrange for completion, or obtain a new contractor, and with reasonable promptness under the circumstances:
4.4.1 After investigation, determine the amount for which it may be liable to the Owner and, as soon as practicable after the amount is determined, tender payment therefor to the Owner; or
4.4.2 Deny liability in whole or in part and notify the Owner citing reasons therefor.

5. If the Surety does not proceed as provided in Paragraph 4 with reasonable promptness, the Surety shall be deemed to be in default on this Bond fifteen days after receipt of an additional written notice from the Owner to the Surety demanding that the Surety performs its obligations under this Bond, and the Owner shall be entitled to enforce any remedy available to the Owner. If the Surety proceeds as provided in Subparagraph 4.4, and the Owner refuses the payment tendered or the Surety has denied liability, in whole or in part, without further notice, the Owner shall be entitled to enforce any remedy available to the Owner.
6. After the Owner has terminated the Contractor's right to complete the Construction Contract, and if the Surety elects to act under Subparagraph 4.1, 4.2 or 4.3 above, then the responsibility of the Surety to the Owner shall not be greater than those of the Contractor under the Construction Contract, and the responsibilities of the Owner to the Surety shall not be greater than those of the Owner under the Construction Contract. To the limit of the amount of this Bond, but subject to commitment by the Owner of the Balance of the Contract Price to mitigation of costs and damages on the Construction Contract, the Surety is obligated without duplication for:
6.1 The responsibilities of the Contractor for correction of defective work and completion of the Construction Contract;
6.2 Additional legal design professional and delay costs resulting from the Contractor's Default, and resulting from the actions or failure to act of the Surety under Paragraph 4; and
6.3 Liquidated damages, or if no liquidated damages are specified in the Construction Contract, actual damages caused by delayed performance or non-performance of the Contractor.
7. The Surety shall not be liable to the Owner or others for obligations of the Contractor that are unrelated to the Construction Contract and the Balance of the Contract Price shall not be reduced or set off on account of any such unrelated obligations. No right of action shall accrue on this Bond to any person or entity other than the Owner or its heirs, executors, administrators or successors.
8. The Surety hereby waives notice of any change, including changes of time, to the Construction Contract or to related sub-contracts, purchase orders and other obligations.
9. Any proceeding, legal or equitable, under this Bond may be instituted in any court of competent jurisdiction in the location in which the work or part of the work is located and shall be instituted within two years after Contractor Default or within two years after the Contractor ceased working or within two years after the Surety refuses or fails to perform its obligations under this Bond, whichever occurs first. If the provisions of this Paragraph are void or prohibited by law, the minimum period of limitation available to sureties as a defense in the jurisdiction of the suit shall be applicable.
10. Notice to the Surety, the Owner or the Contractor shall be mailed or delivered to the address shown on the signature page.
11. When this Bond has been furnished to comply with a statutory or other legal requirement in the location where the construction was to be performed, any provision in this Bond conflicting with said statutory or legal requirement shall be deemed deleted herefrom and provisions conforming to such statutory or other legal requirement shall be deemed incorporated herein. The intent is that this Bond shall be construed as a statutory bond and not as a common law bond.
12. DEFINITIONS:
12.1 Balance of the Contact Price: The total amount payable by the Owner to the Contractor under the Construction Contract after all proper adjustments have been made, including allowance to the Contractor of any amounts received or to be received by the Owner in settlement of insurance or other claims for damages to which the Contractor is entitled, reduced by all valid and proper payments made to or on behalf of the Contractor under the Construction Contract.
12.2 Construction Contract: The agreement between the Owner and the Contractor identified on the signature page, including all Contract Documents and changes thereto.
12.3 Contractor Default: Failure of the Contractor, which has neither been remedied nor waived, to perform or otherwise to comply with the terms of the Construction Contract.
12.4 Owner Default: Failure of the Owner, which has neither been remedied nor waived, to pay the Contractor as required by the Construction Contract or to perform and complete or comply with the other terms thereof.

MODIFICATIONS TO THIS BOND ARE AS FOLLOWS:

_____
_____
_____
_____
_____
_____

(Space is provided below for additional signatures of added parties, other than those appearing on the cover page.)

CONTRACTOR AS PRINCIPAL (Corporate Seal)	SURETY (Corporate Seal)
Company: _____	Company: _____
_____	_____
_____	_____
Signature: _____	Signature: _____
Name and Title: _____	Name and Title: _____
Address: _____	Address: _____
_____	_____

SECTION 00530

NOTICE OF AWARD

TO:

PROJECT DESCRIPTION:

350,000 GALLON WATER TANK: The Work includes furnishing all labor, tools, materials, equipment, transportation and services required for the construction of the above described project; and consists of the following items of work: mobilization; all required earthwork, including general, structural, and trench excavation, backfill, embankments, and compaction; rock excavation; exporting excess excavated materials; borrow for gravel base for tank, trench backfill, pipe bedding and riprap; gravel surfacing for access and perimeter roads; furnishing and installing 12-inch, 10-inch and 6-inch pressure pipe and fittings; connecting project pipes to existing pipe lines; constructing reinforced concrete water storage tank, complete, including metal work, coatings and painting; furnishing and installing plumbing system for tank; furnishing and placing erosion control mats and native grass seed; and all appurtenant work; all in accordance with Drawings and Specifications prepared by the Engineer; Gilson Engineering.

The OWNER has considered the BID submitted by you for the above-described WORK in response to its INVITATION TO BID, dated _____, and INSTRUCTIONS TO BIDDERS.

You are hereby notified that your BID has been accepted for the WORK in the amount of $_____.

You are required by the INSTRUCTIONS TO BIDDERS to execute the AGREEMENT and furnish the required CONTRACTORS PERFORMANCE BOND, PAYMENT BOND and certificates of insurance within ten (10) calendar days from the date of this Notice to you.

If you fail to execute said AGREEMENT and to furnish said BONDS within ten (10) days from the date of this Notice, said OWNER will be entitled to consider all your rights arising out of the OWNERS acceptance of your BID as abandoned and as a forfeiture of your BID BOND. The OWNER will be entitled to such other rights as may be granted by law.

You are required to return an acknowledged copy of this NOTICE OF AWARD to the OWNER.

Dated this ___ day of _____, 20__,

_____

BY: _____

TITLE:_____

ACCEPTANCE OF NOTICE

Receipt of the above NOTICE OF AWARD is hereby acknowledged by _____.
on this _____ day of _____, 20__.

_____

BY: _____

TITLE: _____

SECTION 00540

NOTICE TO PROCEED

TO:

PROJECT DESCRIPTION:

350,000 GALLON WATER TANK: The Work includes furnishing all labor, tools, materials, equipment, transportation and services required for the construction of the above described project; and consists of the following items of work: mobilization; all required earthwork, including general, structural, and trench excavation, backfill, embankments, and compaction; rock excavation; exporting excess excavated materials; borrow for gravel base for tank, trench backfill, pipe bedding and riprap; gravel surfacing for access and perimeter roads; furnishing and installing 12-inch, 10-inch and 6-inch pressure pipe and fittings; connecting project pipes to existing pipe lines; constructing reinforced concrete water storage tank, complete, including metal work, coatings and painting; furnishing and installing plumbing system for tank; furnishing and placing erosion control mats and native grass seed; and all appurtenant work; all in accordance with Drawings and Specifications prepared by the Engineer; Gilson Engineering.

You are hereby notified to commence WORK on this PROJECT in accordance with the AGREEMENT, dated ________________________, 20___, on or before ________________________________, 20___; and you are to fully complete the WORK within ________________________ calendar days thereafter. The date of completion of all WORK is therefore __________________________, 20___.

Receipt of the above NOTICE TO PROCEED is hereby acknowledged on this ___________ day of _________________________, 20___.

____

BY: ____

TITLE: _______________________________________

\- -

ACCEPTANCE OF NOTICE

Receipt of the above NOTICE TO PROCEED is hereby acknowledged on this ___________ day of _________________________, 20___.

BY: _______________________________________

TITLE: ____________________________________

NOTICE TO PROCEED

SECTION 00560

DATE

CHANGE ORDER NO.

PROJECT:

CONTRACTOR:

You are hereby requested to comply with the following changes from the contract plans and specifications.

Item No. (1)	DESCRIPTION OF CHANGES: quantities, units, prices, schedule, etc. (2)	Decrease (3)	Increase (4)
	Total of Decreases:		
	Total of Increases:		
	Net contract change		

The sum of $ is added to the total contract price. The total adjusted contract price to date is $

This document shall become an amendment to the contract and all provisions of the contract will apply hereby.

Accepted by Contractor:

Date:

Contractor

Recommended by Inspector:

Date:

Inspector

Recommended by Engineer:

Date:

GILSON ENGINEERING, INC.

Approved by Owner:

Date:

District/Client

SECTION 00570
CERTIFICATE OF SUBSTANTIAL COMPLETION

PROJECT:

DATE OF ISSUANCE:

OWNER:

ENGINEER: Gilson Engineering, Inc.
12401 South 450 East C2
Draper, Utah 84020

Contract Nº:

CONTRACTOR:

CONTRACT FOR:

CONTRACT DATE:

This Certificate of Substantial Completion applies to all Work under the Contract Documents or the following parts thereof:

PER SPECIFICATIONS

To:_____
Owner

And To_____
Contractor

The Work to which this Certificate applies has been inspected by authorized representatives of OWNER, CONTRACTOR AND ENGINEER, and that Work is hereby declared to be substantially complete in accordance with the Contract Documents on:

_____
DATE OF SUBSTANTIAL COMPLETION

A tentative list of items to be completed or corrected is attached hereto. This list may not be all-inclusive, and the failure to include an item in it does not alter the responsibility of CONTRACTOR to complete all the Work in accordance with the Contract documents. The items in the tentative list shall be completed or corrected by the CONTRACTOR within ***30*** days of the above date of Substantial Completion.

The responsibilities between OWNER and CONTRACTOR for security, operation, safety, maintenance, heat, utilities, insurance and warranties shall be as follows:

RESPONSIBILITIES

OWNER: SECURITY, OPERATION, MAINTENANCE, HEAT, UTILITIES, AND INSURANCE

CONTRACTOR: INSURANCE, WARRANTY, AND SAFETY .

The following work must be completed:

This certificate does not constitute an acceptance of Work not in accordance with the contract documents nor is it a release of Contractor's obligation to complete the work in accordance with the contract documents.

Executed by the ENGINEER on _____

Gilson Engineering, Inc.
ENGINEER

By _____

CONTRACTOR accepts this certificate of Substantial Completion on _____, 20 .

_____
CONTRACTOR

By _____

OWNER accepts this certificate of Substantial Completion on _____, 20 .

_____
OWNER

By _____

SECTION 00580
NOTICE OF COMPLETION
DATE:

PROJECT:

TO:

CONTRACTOR:

You are hearby notified, in accordance with the Contract Documents including all changes and amendments, and no outstanding claims exist, that the WORK on this project is complete.

_____
OWNER

By _____

Date _____

Receipt of the above NOTICE OF COMPLETION if hereby acknowledged on

this _____ day of _____,20____.

_____
CONTRACTOR

By _____

Date _____

SECTION 00700

GENERAL CONDITIONS

TABLE OF CONTENTS

Article Number	Title	Page
1.	DEFINITIONS AND TERMINOLOGY	
	A. Definitions	4
	B. Terminology	6
2.	PRELIMINARY MATTERS	
	A. Delivery of Bonds and Evidence of Insurance	7
	B. Copies of Documents	7
	C. Commencements of Contract Time; Notice to Proceed	7
	D. Starting the Project	7
	E. Time for Completion and Liquidated Damages	8
	F. Before Starting Construction	8
	G. Preconstruction Conference	8
	H. Finalizing Schedules	8
	I. Progress Meetings	9
3.	CONTRACT DOCUMENTS: INTENT, AMENDING, REUSE	
	A. Intent	9
	B. Reference Standards	9
	C. Reporting and Resolving Discrepancies	9
	D. Amending and Supplementing Contract Documents	10
	E. Reuse of Documents	10
	F. Electronic Data	10
4.	AVAILABILITY OF LANDS; SUBSURFACE AND PHYSICAL CONDITIONS; HAZARDOUS ENVIRONMENTAL CONDITONS; REFERENCE POINTS	
	A. Availability of Lands	11
	B. Subsurface and Physical Conditions	11
	C. Differing Subsurface or Physical Conditions	11
	D. Underground Facilities	12
	E. Reference Points	13
	F. Hazardous Environmental Condition at Site	13
5.	BONDS AND INSURANCE	
	A. Performance, Payment and Other Bonds	14
	B. Licensed Sureties and Insurers	15
	C. Certificates of Insurance	15
	D. Contractor's Liability Insurance	15
	E. Owner's Liability Insurance	16
	F. Property Insurance	16
	G. Waiver of Rights	17
	H. Receipt and Application of Insurance Proceeds	17
	I. Acceptance of Bonds and Insurance; Option to Replace	17
	J. Partial Utilization, Acknowledgment of Property Insurer	18
6.	CONTRACTOR'S RESPONSIBILITIES	
	A. Supervision and Superintendence	18
	B. Labor; Working Hours	18
	C. Services, Materials, and Equipment	18
	D. Progress Schedule	18
	E. Substitutes and "Or-Equals"	19
	F. Concerning Subcontractors, Suppliers, and Others	20
	G. Patent Fees and Royalties	21
	H. Permits	21
	I. Laws and Regulations	21
	J. Taxes	21
	K. Use of Site and Other Areas	21
	L. Record Documents	22
	M. Safety and Protection	22

Article Number | Title | Page

N. Safety Representative 22
O. Hazard Communication Programs 23
P. Emergencies 23
Q. Shop Drawings and Samples 23
R. Continuing the Work 24
S. Contractor's General Warranty and Guarantee 24
T. Indemnification 25
U. Delegation of Professional Design Services 25

7. OTHER WORK AT THE SITE
A. Related Work at Site 26
B. Coordination 26
C. Legal Relationships 26

8. OWNER'S RESPONSIBILITIES
A. Communication to Contractor 26
B. Replacement of Engineer 27
C. Furnish Data 27
D. Pay When Due 27
E. Lands and Easements; Reports and Tests 27
F. Insurance 27
G. Change Orders 27
H. Inspections, Tests and Approvals 27
I. Limitations on Owner's Responsibilities 27
J. Undisclosed Hazardous Environmental Condition 27
K. Evidence of Financial Arrangements 27

9. ENGINEER'S STATUS DURING CONSTRUCTION
A. Owner's Representative 28
B. Visits to Site 28
C. Project Representative 28
D. Authorized Variations in Work 28
E. Rejecting Defective Work 28
F. Shop Drawings, Change Orders and Payments 28
G. Determination of Unit Price Work 29
H. Decisions on Requirements of Contract Documents and Acceptability of Work 29
I. Limitations on Engineer's Authority and Responsibilities 29

10. CHANGES IN THE WORK; CLAIMS
A. Authorized Changes in the Work 30
B. Unauthorized Changes in the Work 30
C. Execution of Change Orders 30
D. Notification to Surety 30
E. Claims 30

11. COST OF THE WORK; ALLOWANCES; UNIT PRICE WORK
A. Cost of the Work 31
B. Allowances 32
C. Unit Price Work 33

12. CHANGE OF CONTRACT PRICE; CHANGE OF CONTRACT TIME
A. Change of Contract Price 33
B. Change of Contract Times 34
C. Delays 34

13. TESTS AND INSPECTIONS; CORRECTION, REMOVAL OR ACCEPTANCE OF DEFECTIVE WORK
A. Notice of Defects 34
B. Access to Work 34
C. Tests and Inspections 35
D. Uncovering Work 35
E. Owner May Stop the Work 35
F. Correction or Removal of Defective Work 36
G. Correction Period 36

Article Number | Title | Page

H. Acceptance of Defective Work 36
I. Owner May Correct Defective Work 37

14. PAYMENTS TO CONTRACTOR AND COMPLETION
A. Schedule of Values 37
B. Progress Payments 37
C. Contractor's Warranty of Title 39
D. Substantial Completion 39
E. Partial Utilization 39
F. Final Inspection 40
G. Final Payment 40
H. Final Completion Delayed 40
I. Waiver of Claims 41

15. SUSPENSION OF WORK AND TERMINATION
A. Owner May Suspend Work 41
B. Owner May Terminate For Cause 41
C. Owner May Terminate For Convenience 42
D. Contractor May Stop Work or Terminate 42

16. DISPUTE RESOLUTION
A. Methods and Procedures 42

17. MISCELLANEOUS
A. Giving Notice 43
B. Computation of Times 43
C. Cumulative Remedies 43
D. Survival of Obligations 43
E. Controlling Law 43
F. Headings 43

SECTION 00700

GENERAL CONDITIONS

ARTICLE 1 — DEFINITIONS AND TERMINOLOGY

A. DEFINITIONS. Wherever used in these GENERAL CONDITIONS or in the other CONTRACT DOCUMENTS, the terms listed below will have the meanings indicated, which are applicable to both the singular and plural thereof:

1.1. ADDENDA -- Written or graphic instruments issued prior to the opening of BIDS which clarify, correct or change the BIDDING requirements or the CONTRACT DOCUMENTS, including SPECIFICATIONS and DRAWINGS.

1.2. AGREEMENT -- The written agreement between the OWNER and CONTRACTOR covering the WORK to be performed; other CONTRACT DOCUMENTS are attached to the AGREEMENT and made a part thereof as provided therein.

1.3. APPLICATION FOR PAYMENT -- Form accepted by the ENGINEER which is to be used by the CONTRACTOR in requesting progress or final payments; and which is to be accompanied by such supporting documentation as is required by the CONTRACT DOCUMENTS.

1.4. ASBESTOS -- Any material that contains more than one percent asbestos and is friable or is releasing asbestos fibers into the air above current action levels established by the United States Occupational Safety and Health Administration.

1.5. BID -- Offer or proposal of BIDDER submitted on the prescribed form setting forth prices for the WORK to be performed.

1.6. BIDDER -- Any person, firm or corporation submitting a BID for the WORK.

1.7. BIDDING DOCUMENTS -- The Invitation to Bid, Instructions to Bidders, Additional Invitation to Bidders, the BID form, and the proposed CONTRACT DOCUMENTS (including all ADDENDA issued prior to receipt of BIDS).

1.8. BIDDING REQUIREMENTS -- Invitation to Bid, Instructions to Bidders, Additional Instructions to Bidders and the BID form.

1.9. BONDS -- Bid, Performance and Payment Bonds and other instruments of security; furnished by the CONTRACTOR and his surety in accordance with the CONTRACT DOCUMENTS.

1.10. CHANGE ORDER -- A document recommended by the ENGINEER, which is signed by the CONTRACTOR and OWNER and authorizes an addition, deletion or revision in the WORK, or an adjustment in the CONTRACT PRICE or CONTRACT TIME, issued on or after the Effective Date of the AGREEMENT.

1.11. CONTRACT DOCUMENTS -- The AGREEMENT, ADDENDA (which pertain to the CONTRACT DOCUMENTS), CONTRACTOR's BID (including documentation accompanying the BID and any post-Bid documentation submitted prior to the NOTICE OF AWARD) when attached as an exhibit to the AGREEMENT, the BONDS, the NOTICE TO PROCEED, these GENERAL CONDITIONS, the SUPPLEMENTAL GENERAL CONDITIONS, the SPECIFICATIONS and the DRAWINGS, the same are more specifically identified in the AGREEMENT, together with all Written Amendments, Change Orders, Work Change Directives, Field Orders and ENGINEER's written interpretations and clarifications issued pursuant to paragraphs 3.5, 3.6.1, and 3.6.3 on or after the Effective Date of the AGREEMENT.

1.11.1. Shop Drawing submittals approved pursuant to paragraphs 6.26 and 6.27 and the reports and drawings referred to in paragraph 4.2.1 are not CONTRACT DOCUMENTS.

1.12. CONTRACT PRICE -- The moneys payable by the OWNER to the CONTRACTOR for completion of the WORK in accordance with the CONTRACT DOCUMENTS as stated in the AGREEMENT (subject to the provisions of paragraph 11.9.1 in the case of Unit Price Work).

1.13. CONTRACT TIMES -- The number of days (computed as provided in paragraph 17.2) or the dates stated in the AGREEMENT: (i) to achieve Substantial Completion, and (ii) to complete the WORK so that it is ready for final payment as evidenced by the ENGINEER's written recommendation of final payment in accordance with paragraph 14.13.

1.14. CONTRACTOR -- The person, firm or corporation with whom the OWNER has entered into the Agreement.

1.15. DEFECTIVE -- An adjective which when modifying the word WORK refers to the WORK that is unsatisfactory, faulty of deficient, in that it does not conform to the CONTRACT DOCUMENTS; or does not meet the requirements of any inspection, reference standard, test or approval referred to in the CONTRACT DOCUMENTS; or has been damaged prior to the ENGINEER's recommendation of final payment (unless responsibility for the protection thereof has been assumed by the OWNER at Substantial Completion in accordance with paragraph 14.8 or 14.10)

1.16. DRAWINGS -- Drawings which show scope, extent and character of the WORK to be furnished and performed by the CONTRACTOR; and which have been prepared or approved by the ENGINEER and referred to in the CONTRACT DOCUMENTS.

1.16.1. Shop drawings are not Drawings as so defined.

1.17. EFFECTIVE DATE OF THE AGREEMENT -- Date indicated in the AGREEMENT on which it becomes effective, but if no such date is indicated it means the date on which the AGREEMENT is signed and delivered by the last of the two parties to sign and deliver.

1.18. ENGINEER -- The person, firm or corporation named as such in the AGREEMENT.

1.19. ENGINEER'S CONSULTANT -- A person, firm or corporation having a contract with the ENGINEER to furnish services as the ENGINEER's independent professional associate or consultant with respect to the Project and who is identified as such in the Supplementary Conditions.

1.20. FIELD ORDER -- A written order issued by the ENGINEER which orders minor changes in the WORK in accordance with paragraph 9.5, but which does not involve a change in CONTRACT PRICE or CONTRACT TIME.

1.21. GENERAL REQUIREMENTS -- Section 00600 of the Specifications.

1.22. HAZARDOUS WASTE -- The term Hazardous Waste shall have the meaning provided in Section 1004 of the Solid Waste Disposal Act (42 USC Section 6903) as amended from time to time.

1.23. INSPECTOR -- The authorized representative of the OWNER or ENGINEER who is assigned to observe the work on the PROJECT.

1.24. LAWS AND REGULATIONS; LAWS OR REGULATIONS -- Any and all applicable laws, rules, regulations, ordinances, codes and orders of any and all governmental bodies, agencies, authorities and courts having jurisdiction.

1.25. LIENS -- Liens, charges, security interests or encumbrances upon real property or personal property.

1.26. MILESTONES -- A principal event specified in the Contract Documents relating to an intermediate completion date or time prior to Substantial Completion of all the Work.

1.27. NOTICE OF AWARD -- The written notice by the OWNER to the apparent successful BIDDER stating that upon compliance by the apparent successful BIDDER with the conditions precedent enumerated therein, within the time specified, the OWNER will sign and deliver the AGREEMENT.

1.28. NOTICE TO PROCEED -- A written notice given by the OWNER to the CONTRACTOR (with a copy to the ENGINEER) fixing the date on which the CONTRACT TIME will commence to run and on which the CONTRACTOR shall start to perform the CONTRACTOR's obligations under the CONTRACT DOCUMENTS.

1.29. NOTICE OF SUBSTANTIAL COMPLETION -- A written notice from the OWNER to the CONTRACTOR that the WORK on the PROJECT is substantially complete.

1.30. NOTICE OF COMPLETION -- A written notice from the OWNER to the CONTRACTOR that the WORK on the PROJECT is complete.

1.31. OWNER -- The public body or authority, corporation, association, firm or person with whom the CONTRACTOR has entered into the AGREEMENT and for whom the WORK is to be provided.

1.32. PARTIAL UTILIZATION -- Use by the OWNER of a substantially completed part of the WORK for the purpose for which it is intended (or a related purpose) prior to SUBSTANTIAL COMPLETION of all the WORK.

1.33. PCBs – Polychlorinated biphenyls.

1.34. PETROLEUM -- Petroleum, including crude oil or any fraction thereof which is liquid at standard conditions of temperature and pressure (60 degrees Fahrenheit and 14.7 pounds per square inch absolute), such as oil, petroleum, fuel oil, oil sludge, oil refuse, gasoline, kerosene, and oil mixed with other non-Hazardous Wastes and crude oils.

1.35. PROJECT -- The total construction of which the WORK to be provided under the CONTRACT DOCUMENTS may be the whole, or a part as indicated elsewhere in the CONTRACT DOCUMENTS.

1.36. RADIOACTIVE MATERIAL -- Source, special nuclear, or by-product material as defined by the Atomic Energy Act of 1954

(42 USC Section 2011 et seq.) as amended from time to time.

1.37. RESIDENT PROJECT REPRESENTATIVE -- The authorized representative of the OWNER or ENGINEER who may be assigned to the site or any part thereof.

1.38. SAMPLES -- Physical examples of materials, equipment, or workmanship that are representative of some portion of the WORK and which establish the standards by which such portion of the WORK will be judged.

1.39. SHOP DRAWINGS -- All drawings, diagrams, illustrations, schedules and other data or information which are specifically prepared or assembled by or for the CONTRACTOR and submitted by the CONTRACTOR to illustrate how specific portions of the WORK shall be fabricated or installed.

1.40. SPECIFICATIONS -- Those portions of the CONTRACT DOCUMENTS consisting of written technical descriptions of materials, equipment, construction systems, standards and workmanship as applied to the WORK and certain administrative details applicable thereto.

1.41. SUBCONTRACTOR -- An individual, firm or corporation having a direct contract with the CONTRACTOR or with any other SUBCONTRACTOR for the performance of a part of the WORK at the site.

1.42. SUBSTANTIAL COMPLETION -- The WORK (or a specified part thereof) has progressed to the point where, in the opinion of ENGINEER, as evidenced by the ENGINEER's definitive certificate of SUBSTANTIAL COMPLETION, it is sufficiently complete, in accordance with the CONTRACT DOCUMENTS, so that the WORK (or specified part) can be utilized for the purposes for which it is intended; or if no such certificate is issued, when the WORK is complete and ready for final payment as evidenced by the ENGINEER's written recommendation of final payment in accordance with paragraph 14.13. The terms "substantially complete" and "substantially completed" as applied to all or part of the WORK refer to SUBSTANTIAL COMPLETION thereof.

1.43. SUPPLEMENTAL GENERAL CONDITIONS -- The part of the CONTRACT DOCUMENTS which amends or supplements these GENERAL CONDITIONS.

1.44. SUPPLIER -- A manufacturer, fabricator, supplier, distributor, material man or vendor having a direct contract with the CONTRACTOR or with any Subcontractor to furnish materials or equipment to be incorporated in the WORK by the CONTRACTOR or any Subcontractor.

1.45. UNDERGROUND FACILITIES -- All pipelines, conduits, ducts, cables, wires, manholes, vaults, tanks, tunnels or other such facilities or attachments, and any encasements containing such facilities which have been installed underground to furnish any of the following services or materials: electricity, gases, steam, liquid petroleum products, telephone or other communications, cable television, sewage and drainage removal, traffic or other control systems or water.

1.46. UNIT PRICE WORK -- WORK to be paid for on the basis of unit prices.

1.47. WORK - The entire completed construction or the various separately identifiable parts thereof required to be furnished under the CONTRACT DOCUMENTS. The WORK includes and is the result of performing or furnishing labor and furnishing and incorporating materials and equipment into the construction, and performing or furnishing services and furnishing documents, all as required by the CONTRACT DOCUMENTS.

1.48. WORK CHANGE DIRECTIVE -- A written directive to the CONTRACTOR, issued on or after the Effective Date of the AGREEMENT and signed by the OWNER and recommended by the ENGINEER, ordering an addition, deletion or revision in the WORK, or responding to differing or unforeseen physical conditions under which the WORK is to be performed as provided in paragraph 4.2 or 4.3 or to emergencies under paragraph 6.23. A WORK CHANGE DIRECTIVE may not change the CONTRACT PRICE or the CONTRACT TIME, but is evidence that the parties expect that the change directed or documented by a WORK CHANGE DIRECTIVE will be incorporated in a subsequently issued CHANGE ORDER following negotiations by the parties as to its effect, if any, on the CONTRACT PRICE or CONTRACT TIME, as provided in paragraph 10.2.

1.49. WRITTEN AMENDMENT -- A written amendment of the CONTRACT DOCUMENTS, signed by the OWNER and CONTRACTOR on or after the Effective Date of the AGREEMENT and normally dealing with the non-engineering or non-technical rather than strictly construction-related aspects of the CONTRACT DOCUMENTS.

1.50. WRITTEN NOTICE -- A written notice to any party of the AGREEMENT relative to any part of this AGREEMENT, in writing and considered delivered and the service thereof completed, when posted by certified or registered mail to the said party at his last given address, or delivered in person to said party or his authorized representative on the WORK.

B. TERMINOLOGY.

1.51. INTENT OF CERTAIN TERMS OR ADJECTIVES -- The Contract Documents include the terms “as allowed”, “as approved”, “as ordered”, “as directed”, or terms of like effect or import to authorize an exercise of professional judgment by the ENGINEER. In addition, the adjectives “reasonable”, “suitable”, “acceptable”, “proper”, “satisfactory”, or adjectives of like effect or import are used to describe an action or determination of the ENGINEER as to the Work. It is intended that such exercise of

profession judgment, action or determination will be solely to evaluate, in general, the Work for compliance with the requirements of and information in the Contract Documents and conformance with the design concept of the completed Project as a functioning whole as shown or indicated in the Contract Documents (unless there is a specific statement indicating otherwise). The use of any such term or adjective is not intended to and shall not be effective to assign to the ENGINEER any duty or authority to supervise or

direct the performance of the Work, or any duty or authority to undertake responsibility contrary to the provisions of Paragraph 9.13 or any other provisions of the Contract Documents.

1.52. DAY -- The word “day” means a calendar day of 24 hours measured from midnight to the next midnight.

1.53. DEFECTIVE -- The word “defective”, when modifying the word “Work”, refers to Work that is unsatisfactory, faulty, or deficient in that it:

1.53.1. does not conform to the Contract Documents; or

1.53.2. does not meet the requirements of any applicable inspection, reference standard, test, or approved referred to in the Contract Documents; or

1.53.3. has been damaged prior to the ENGINEER’s recommendation of final payment (unless responsibility for the protection thereof has been assumed by the OWNER at Substantial Completion in accordance with Paragraphs 14.9 and 14.10).

1.54. FURNISH, INSTALL, PERFORM, PROVIDE.

1.54.1. The word “furnish”, when used in connection with services, materials, or equipment, shall mean to supply and deliver said services, materials, or equipment to the Site (or some other specified location) ready for use or installation, and in usable or operable condition.

1.54.2. The word “install”, when used in connection with services, materials, or equipment, shall mean to put into use or place in final position said services, materials, or equipment complete and ready for intended use.

1.54.3. The words “perform” or “provide”, when used in connection with services, materials, or equipment, shall mean to furnish and install said services, materials, or equipment complete and ready for intended use.

1.54.4. When “furnish”, “install”, “perform”, or “provide” is not used in connection with services, materials, or equipment in a context clearly requiring an obligation of the CONTRACTOR, “provide” is implied.

1.55. Unless stated otherwise in the Contract Documents, words or phrases which have a well-known technical or construction industry or trade meaning are used in the Contract Documents in accordance with such recognized meaning.

ARTICLE 2 --- PRELIMINARY MATTERS.

A. DELIVERY OF BONDS AND EVIDENCE OF INSURANCE:

2.01.1. When the CONTRACTOR delivers executed counterparts of the AGREEMENT to the OWNER, the CONTRACTOR shall also deliver to the OWNER such BONDS as CONTRACTOR may be required to furnish in accordance with paragraph 5.1.

2.01.2. Before any Work at the Site is started, the CONTRACTOR and OWNER shall each deliver to the other, with copies to each additional insured indentified in the Supplemental General Conditions, certificates of insurance (and other evidence of insurance which either of them or any additional insured may reasonably request) which the CONTRACTOR and OWNER respectively are required to purchase and maintain in accordance with Article 5.

B. COPIES OF DOCUMENTS:

2.02. The OWNER shall furnish to the CONTRACTOR two copies of the CONTRACT DOCUMENTS (unless otherwise specified in the SUPPLEMENTAL GENERAL CONDITIONS) as are necessary for the execution of the WORK. Additional copies will be furnished, upon request, at the cost of reproduction.

C. COMMENCEMENT OF CONTRACT TIME; NOTICE TO PROCEED:

2.03. The CONTRACT TIME will commence to run on the day indicated in the NOTICE TO PROCEED. A NOTICE TO PROCEED may be given at any time within thirty days after the Effective Date of the AGREEMENT. In no event will the CONTRACT TIME commence to run later than the sixty days after the day of the BID opening or the thirtieth day after the Effective Date of the AGREEMENT, whichever date is earlier.

D. STARTING THE PROJECT:

2.04. The CONTRACTOR shall start to perform the WORK on the date when the CONTRACT TIME commences to run, but no WORK shall be done at the site prior to the date on which the CONTRACT TIME commences to run.

E. TIME FOR COMPLETION AND LIQUIDATED DAMAGES:

2.05.1. The date of beginning and the time for completion of the WORK are essential conditions of the CONTRACT DOCUMENTS and the WORK embraced shall be commenced on a date specified in the NOTICE TO PROCEED.

2.05.2. The CONTRACTOR will proceed with the WORK at such rate of progress to insure full completion within the CONTRACT TIME. It is expressly understood and agreed, by and between the CONTRACTOR and the OWNER, that the

CONTRACT TIME for the completion of the WORK described herein is a reasonable time, taking into consideration the average climatic and economic conditions and other factors prevailing in the locality of the WORK.

2.05.3. If the CONTRACTOR shall fail to complete the WORK within the CONTRACT TIME, or extension of time granted by the OWNER, then the contractor will pay to the OWNER the amount for liquidated damages as specified in the BID for each calendar day that the CONTRACTOR shall be in default after the time stipulated in the CONTRACT DOCUMENTS.

2.05.4. The CONTRACTOR shall not be charged with liquidated damages or any excess cost when the delay in completion of the WORK is due to the following and the CONTRACTOR has promptly given WRITTEN NOTICE of such delay to the OWNER or ENGINEER.

a. To any preference, priority or allocation order duly issued by the OWNER.

b. To unforeseeable causes beyond the control and without the fault or negligence of the CONTRACTOR, including but not restricted to, acts of God or of the public enemy, acts of the OWNER, acts of other CONTRACTOR in the performance of a contract with the OWNER, fires, floods, epidemics, quarantine restrictions, strikes, freight embargoes, and abnormal and unforeseeable weather; and

c. To any delays of SUBCONTRACTORS occasioned by any of the causes specified in paragraphs 2.8.1 and 2.8.2 of this article.

F. BEFORE STARTING CONSTRUCTION:

2.06.1. Before undertaking each part of the WORK, the CONTRACTOR shall carefully study and compare the CONTRACT DOCUMENTS and check and verify pertinent figures shown thereon and all applicable field measurements. The CONTRACTOR shall promptly report in writing to the ENGINEER any conflict, error, ambiguity or discrepancy which the CONTRACTOR may discover and shall obtain a written interpretation or clarification from the ENGINEER before proceeding with any WORK affected thereby; however, the CONTRACTOR shall not be liable to the OWNER or ENGINEER for failure to report any conflict, error, ambiguity or discrepancy in the CONTRACT DOCUMENTS, unless the CONTRACTOR knew or reasonably should have known thereof.

2.06.2. Within ten days after the Effective Date of the AGREEMENT (unless otherwise specified in the General Requirements), the CONTRACTOR shall submit to the ENGINEER for review:

a. a preliminary progress schedule indicating the times (numbers of days or dates) for starting and completing the various stages of the WORK, including any Milestones specified in the CONTRACT DOCUMENTS;

b. a preliminary schedule of SHOP DRAWING and Sample submittals which will list each required submittal and the times for submitting, reviewing and processing such submittal;

c. a preliminary schedule of values for all of the WORK which will include quantities and prices of items aggregating the CONTRACT PRICE and will subdivide the WORK into component parts in sufficient detail to serve as the basis for progress payments during construction. Such prices will include an appropriate amount of overhead and profit applicable to each item of the WORK.

G. PRECONSTRUCTION CONFERENCE:

2.07. Within twenty days after the Effective Date of the AGREEMENT, but before the CONTRACTOR starts the WORK at the site, a conference attended by the CONTRACTOR, ENGINEER, OWNER and others as appropriate will be held to establish a working understanding among the parties as to the WORK; and to discuss the schedules referred to in paragraph 2.6, procedures for handling SHOP DRAWINGS and other submittals, and for processing APPLICATIONS FOR PAYMENT, and maintaining

required records. The preconstruction conference shall be as described in Section 01300, ADMINISTRATIVE REQUIREMENTS.

H. FINALIZING SCHEDULES:

2.08. Unless otherwise provided in the CONTRACT DOCUMENTS, at least ten days before submission of the first APPLICATION FOR PAYMENT a conference attended by the CONTRACTOR, ENGINEER and others as appropriate will be held to review for acceptability to the ENGINEER as provided below the schedules submitted in accordance with paragraph 2.6 and Section 01300. The CONTRACTOR shall have an additional ten days to make corrections and adjustments and to complete and re-submit the schedules. No progress payment shall be made to the CONTRACTOR until the schedules are submitted to and acceptable to the ENGINEER, as provided below. The progress schedule will be acceptable to the ENGINEER as providing an orderly progression of the WORK to completion within any specified Milestones and the CONTRACT TIME, but such acceptance will neither impose on the ENGINEER responsibility for the sequencing, scheduling or progress of the WORK nor interfere with or relieve the CONTRACTOR from the CONTRACTOR's full responsibility therefore. The CONTRACTOR's schedule of SHOP DRAWING and Sample submissions will be acceptable to the ENGINEER as providing a workable arrangement for reviewing and processing the required submissions. The CONTRACTOR's schedule of values will be acceptable to the ENGINEER as to form and substance.

I. PROGRESS MEETINGS:

2.09. Progress meeting shall be scheduled by the CONTRACTOR as described in Section 01300.

ARTICLE 3 --- CONTRACT DOCUMENTS: INTENT, AMENDING, REUSE.

A. INTENT:

3.01.1. The CONTRACT DOCUMENTS comprise the entire agreement between the OWNER and the CONTRACTOR concerning the WORK. The CONTRACT DOCUMENTS are complementary; what is called for by one is as binding as if called for by all. The CONTRACT DOCUMENTS will be construed in accordance with the law of the place of the Project.

3.01.2. It is the intent of the CONTRACT DOCUMENTS (including technical specifications and project drawings) to describe a functionally complete PROJECT (or part thereof) to be constructed in accordance with the CONTRACT DOCUMENTS. Any WORK, materials or equipment that may reasonably be inferred from the CONTRACT DOCUMENTS or from prevailing custom or trade usage as being required to produce the intended result will be furnished and performed whether or not specifically called for, at no additional cost to the OWNER. When words or phrases which have a well-known technical or construction industry or trade meaning are used to describe the WORK, materials or equipment, such words or phrases shall be interpreted in accordance with that meaning.

3.01.3. Clarifications and interpretations of the CONTRACT DOCUMENTS shall be issued by the ENGINEER as provided in Article 9.

B. REFERENCE STANDARDS

3.02. Standards, Specifications, Codes, Laws, and Regulations.

3.02.1. Reference to standards, specifications, manuals or codes of any technical society, organization or association, or to the LAWS or REGULATIONS of any governmental authority, whether such reference be specific or by implication, shall mean the latest standard, specification, manual, code or LAWS or REGULATIONS in effect at the time of the opening of BIDS (or, on the Effective Date of the AGREEMENT if there were no BIDS); except as may be otherwise specifically stated in the CONTRACT DOCUMENTS.

3.02.2. No provision of any such standard, specification, manual, code or any instruction of a Supplier shall be effective to change the duties and responsibilities of the OWNER, CONTRACTOR or ENGINEER, or any of their subcontractors, consultants, agents or employees from those set forth in the CONTRACT DOCUMENTS. No such provision or instruction shall be effective to assign to the OWNER, ENGINEER, or any of their related consultants, agents or employees, any duty or authority to supervise or direct the performance of the WORK, or any duty or authority to undertake responsibility inconsistent with the provisions of the CONTRACT DOCUMENTS.

C. REPORTING AND RESOLVING DISCREPANCIES

3.03.1 Reporting Discrepancies.

a. Contractor's Review of Contract Documents Before Starting Work: Before undertaking each part of the Work, the CONTRACTOR shall carefully study and compare the CONTRACT DOCUMENTS and check and verify pertinent figures therein and all applicable field measurements. The CONTRACTOR shall promptly report in writing to the ENGINEER any conflict, error,

ambiguity, or discrepancy which the CONTRACTOR may discover and shall obtain a written interpretation or clarification from the ENGINEER before proceeding with any WORK affected thereby.

b. Contractor's Review of Contract Documents During Performance of Work: If, during the performance of the WORK, the CONTRACTOR discovers a conflict, error, ambiguity or discrepancy within the CONTRACT DOCUMENTS or between the CONTRACT DOCUMENTS and any provision of any such Law or Regulation applicable to the performance of the WORK or of any standard, specification, manual or code or of any instruction of any Supplier, the CONTRACTOR shall promptly report it to the ENGINEER in writing. The CONTRACTOR shall not proceed with the WORK affected thereby (except in an emergency as required by Article 6) until an amendment or supplement to the CONTRACT DOCUMENTS has been issued by one of the methods indicated in Article 3.

c. The CONTRACTOR shall not be liable to the OWNER or ENGINEER for failure to report any conflict, error, ambiguity or discrepancy in the CONTRACT DOCUMENTS unless the CONTRACTOR knew or reasonably should have known thereof.

3.03.2. Resolving Discrepancies.

a. Except as otherwise specifically stated in the CONTRACT DOCUMENTS or as may be provided by amendment or supplement thereto issued by one of the methods indicated in Article 3, the provisions of the CONTRACT DOCUMENTS shall take precedence in resolving any conflict, error, ambiguity or discrepancy between the provisions of the CONTRACT DOCUMENTS, and:

(1) the provisions of any such standard, specification, manual, code or instruction (whether or not specifically incorporated by reference in the CONTRACT DOCUMENTS); or

(2) the provisions of any Laws or Regulations applicable to the performance of the Work (unless such an interpretation of the provisions of the CONTRACT DOCUMENTS would result in violation of such Law or Regulation).

D. AMENDING AND SUPPLEMENTING CONTRACT DOCUMENTS:

3.04.1. The CONTRACT DOCUMENTS may be amended to provide for additions, deletions and revisions in the WORK or to modify the terms and conditions thereof by either a Change Order or a Written Change Directive.

3.04.2. The requirements of the CONTRACT DOCUMENTS may be supplemented, and minor variations and deviations in the WORK may be authorized, in one or more of the following ways:

a. a Field Order (subject to the provisions of to Article 9);

b. ENGINEER's acceptance of a SHOP DRAWING or sample (subject of the provisions of Article 6); or

c. ENGINEER's written interpretation or clarification (pursuant to paragraph 9.4); or

d. additional instructions and detail drawings, as necessary to carry out the WORK in accordance with the requirements of the CONTRACT DOCUMENTS. The additional drawings and instruction thus supplied will become a part of the CONTRACT DOCUMENTS. The CONTRACTOR shall carry out the WORK in accordance with the additional detail drawings and instruction.

E. REUSE OF DOCUMENTS:

3.05.1. The CONTRACTOR, and any Subcontractor or Supplier or other individual or entity performing or furnishing any of the WORK under a direct or indirect contract with the CONTRACTOR, shall not:

a. have or acquire any title to or ownership rights in any of the DRAWINGS, SPECIFICATIONS or other documents (or copies of any thereof) prepared by or bearing the seal of the ENGINEER or the ENGINEER's consultants, including electronic media editions; or

b. reuse any of such DRAWINGS, SPECIFICATIONS, or other documents or copies on extensions of the Project or any other project without written consent of OWNER and ENGINEER and specific written verification or adaption by the ENGINEER.

3.05.2. The prohibition of this Paragraph B will survive final payment, or termination of the CONTRACT. Nothing herein shall preclude the CONTRACTOR from retaining copies of the CONTRACT DOCUMENTS for record purposes.

F. ELECTRONIC DATA

3.06.1. Copies of data furnished by the OWNER or ENGINEER to the CONTRACTOR or CONTRACTOR to OWNER or ENGINEER that may be relied upon are limited to the printed copies (also known as hard copies). Files in electronic media format or text, data, graphics, or other types are furnished only for the convenience of the receiving party. Any conclusion or information obtained or derived from such electronic files will be at the user's sole risk. If there is a discrepancy between the electronic files and the hard copies, the hard copies govern.

3.06.2. Because data stored in electronic media format can deteriorate or be modified inadvertently or otherwise without authorization of the data's creator, the party receiving electronic files agrees that it will perform acceptance tests or procedures within 60 days, after which the receiving party shall be deemed to have accepted the data thus transferred. Any errors detected within the 60-day acceptance period will be corrected by the transferring party.

3.06.3. When transferring documents in electronic media format, the transferring party makes not representations as to long term compatibility, usability, or readability of documents resulting from the use of software application packages, operating systems, or computer hardware differing from those used by the data's creator.

ARTICLE 4 --- AVAILABILITY OF LANDS; SUBSURFACE AND PHYSICAL CONDITIONS; HAZARDOUS ENVIRONMENTAL CONDITIONS; REFERENCE POINTS

A. AVAILABILITY OF LANDS:

4.01.1. The OWNER shall furnish the lands upon which the WORK is to be performed, rights-of-way and easements for access thereto, and such other lands which are designated for the use of the CONTRACTOR, as indicated in the CONTRACT DOCUMENTS. Easements for permanent structures or permanent changes in existing facilities will be obtained and paid for by the OWNER, unless otherwise provided in the CONTRACT DOCUMENTS.

a. The OWNER shall provide the CONTRACTOR with information which delineates and describes the lands owned, and easements and rights-of-way acquired on the lands upon which the WORK is to be performed.

b. The OWNER shall notify the CONTRACTOR of any encumbrances or restrictions not of general application but specifically related to use of lands so furnished with which the CONTRACTOR will have to comply in performing the WORK.

c. Easements for permanent structures or permanent changes in existing facilities will be obtained and paid for by the OWNER, unless otherwise provided in the CONTRACT DOCUMENTS.

d. If the CONTRACTOR and OWNER are unable to agree on entitlement to or on the amount or extent, if any, of any adjustments in the CONTRACT PRICE or CONTRACT TIME or both, as a result of any delay in the OWNER's furnishing these lands, rights-of-way, easements, or parts thereof, the CONTRACTOR may make a claim therefore as provided in Article 11 and 12.

4.01.2. Upon reasonable written request, the OWNER shall furnish the CONTRACTOR with a current statement of record legal title and legal description of the lands upon which the Work is to be performed and the OWNER's interest therein as necessary for giving notice of or filing a mechanic's or construction lien against such lands in accordance with applicable Laws and Regulations.

4.01.3. The CONTRACTOR shall provide, at his own expense and without liability to the OWNER, for all additional lands and access thereto that may be required for temporary construction facilities or storage of materials and equipment.

B. SUBSURFACE AND PHYSICAL CONDITIONS:

4.02.1. Reports and Drawings. Reference is made to the Supplemental General Conditions for identification of:

a. Those reports of explorations and tests of subsurface conditions at or contiguous to the site that have been utilized by the ENGINEER in preparing the CONTRACT DOCUMENTS; and

b. Those drawings of physical conditions in or relating to existing surface or subsurface structures at or contiguous to the site (except Underground Facilities) that have been utilized by the ENGINEER in preparing the CONTRACT DOCUMENTS.

4.02.2. Limited Reliance by CONTRACTOR on Technical Data Authorized: The CONTRACTOR may rely upon the general accuracy of the "technical data" contained in such reports and drawings, but such reports and drawings are not CONTRACT DOCUMENTS. Such "technical data" is identified in the Supplemental General Conditions. Except for such reliance on such "technical data", the CONTRACTOR may not rely upon or make any claim against the OWNER, ENGINEER or any of the ENGINEER's consultants with respect to:

a. the completeness of such reports and drawings for the CONTRACTOR's purposes, including, but not limited to, any aspects of the means, methods, techniques, sequences and procedures of construction to be employed by the CONTRACTOR and safety precautions and programs incident thereto; or

b. other data, interpretations, opinions and information contained in such reports or shown or indicated in such drawings; or

c. any CONTRACTOR interpretation of or conclusion drawn from any "technical data" or any such data, interpretations, opinions, or information.

C. DIFFERING SUBSURFACE OR PHYSICAL CONDITIONS

4.03.1. Notice of Differing Subsurface or Physical Conditions: If the CONTRACTOR believes that any subsurface or physical condition at or contiguous to the site that is uncovered or revealed either:

a. is of such a nature as to establish that any “technical data” on which the CONTRACTOR is entitled to rely as provided in paragraphs 4.02 is materially inaccurate; or

b. is of such a nature as to require a change in the CONTRACT DOCUMENTS; or

c. differs materially from that shown or indicated in the CONTRACT DOCUMENTS; or

d. is of an unusual nature, and differs materially from conditions ordinarily encountered and generally recognized as inherent in work of the character provided for in the CONTRACT DOCUMENTS; then

e. the CONTRACTOR shall, promptly after becoming aware thereof and before further disturbing the subsurface or physical conditions affected thereby or performing any WORK in connection therewith (except in an emergency as permitted by Article 6), notify the OWNER and ENGINEER in writing about such conditions. The CONTRACTOR shall not further disturb such conditions or perform any WORK in connection therewith (except as aforesaid) until receipt of written order to do so.

4.03.2. ENGINEER's Review. After receipt of written notice as required above, the ENGINEER will promptly review the pertinent conditions, determine the necessity of the OWNER’s obtaining additional explorations or tests with respect thereto and advise the OWNER in writing (with a copy to the CONTRACTOR) of the ENGINEER's findings and conclusions.

4.03.3. Possible Contract Document Change. If the ENGINEER concludes that a change in the CONTRACT DOCUMENTS is required as a result of a condition that meets one or more of the categories in paragraphs 4.03, a WORK CHANGE DIRECTIVE or a CHANGE ORDER will be issued as provided in Article 10 to reflect and document the consequences of such change.

4.03.4. Possible Price and Time Adjustments.

a. An equitable adjustment in the CONTRACT PRICE or CONTRACT TIME, or both, will be allowed to the extent that the existence of such uncovered or revealed condition causes an increase or decrease in the CONTRACTOR’s cost of, or time required for performance of, the WORK; subject, however, to the following:

(1) such condition must meet any one or more of the categories described in paragraphs 4.03.1; and

(2) a change in the CONTRACT DOCUMENTS pursuant to paragraph 4.03.3 will not be an automatic authorization of nor a condition precedent to entitlement to any such adjustment; and

(3) with respect to Work that is paid for on a Unit Price Basis, any adjustment in the CONTRACT PRICE will be subject to the provisions of Articles 9 and 11.

b. The CONTRACTOR shall not be entitled to any adjustment in the CONTRACT PRICE or TIME if:

(1) the CONTRACTOR knew of the existence of such conditions at the time the CONTRACTOR made a final commitment to the OWNER in respect of CONTRACT PRICE and CONTRACT TIME by the submission of a bid or becoming bound under a negotiated contract; or

(2) the existence of such conditions could reasonably have been discovered or revealed as a result of any examination, investigation, exploration, test or study of the site and contiguous areas required by the BIDDING Requirements or the CONTRACT DOCUMENTS to be conducted by or for the CONTRACTOR prior to the CONTRACTOR’s making such final commitment; or

(3) the CONTRACTOR failed to give the written notice within the time and as required by this paragraph.

c. If the OWNER and CONTRACTOR are unable to agree on entitlement to or as to the amount or extent, of any, of any adjustment in the CONTRACT PRICE or CONTRACT TIME, or both, a claim may be made therefore as provided in Articles 11 and 12. However, the OWNER, ENGINEER, and any of ENGINEER’s consultants shall not be liable to the CONTRACTOR for any claims, costs, losses or damages (including but not limited to all fees and charges of engineers, attorneys, and other professionals and all court or arbitration or other dispute resolution costs) sustained by the CONTRACTOR on or in connection with any other project or anticipated project.

D. UNDERGROUND FACILITIES

4.04.1. Shown or Indicated. The information and data shown or indicated in the CONTRACT DOCUMENTS with respect to existing Underground Facilities at or contiguous to the site is based on information and data furnished to the OWNER or ENGINEER by the owners of such Underground Facilities or by others. Unless it is otherwise expressly provided in the Supplemental General Conditions:

a. the OWNER and ENGINEER shall not be responsible for the accuracy or completeness of any such information or data; and

b. The cost of all of the following will be included in the CONTRACT PRICE and the CONTRACTOR shall have full responsibility for:

(1) reviewing and checking all such information and data,
(2) locating all Underground Facilities shown or indicated in the CONTRACT DOCUMENTS,
(3) coordination of the WORK with the owners of such Underground Facilities during construction, and
(4) the safety and protection of all such Underground Facilities and repairing any damage thereto resulting from the WORK.

4.04.2. Not Shown or Indicated:

a. If an Underground Facility is uncovered or revealed at or contiguous to the site which was not shown or indicated in the CONTRACT DOCUMENTS, the CONTRACTOR shall promptly after becoming aware thereof and before further disturbing conditions affected thereby or performing any WORK in connection therewith (except in an emergency as permitted by Article 6), identify the owner of such Underground Facility and give written notice thereof to that owner and to the OWNER and ENGINEER. The ENGINEER will promptly review the Underground Facility to determine the extent, if any, to which a change is required in the CONTRACT DOCUMENTS to reflect and document the consequences of the existence of the Underground Facility. During such time, the CONTRACTOR shall be responsible for the safety and protection of such Underground Facility.

b. If the ENGINEER concludes that a change in the CONTRACT DOCUMENTS is required, a Work Change Directive or a Change Order will be issued as provided in Article 10 to reflect and document such consequences. An equitable adjustment shall be made in the CONTRACT PRICE or CONTRACT TIME, or both, to the extent that they are attributable to the existence or location of any Underground Facility that was not shown or indicated with reasonable accuracy in the CONTRACT DOCUMENTS and the CONTRACTOR did not know of and could not reasonably have been expected to be aware of or to have anticipated. If the OWNER and CONTRACTOR are unable to agree on entitlement to or the amount or extent, if any, of any such adjustment in CONTRACT PRICE or CONTRACT TIME, the OWNER or CONTRACTOR may make a claim therefore as provided in Articles 11 and 12. However, the OWNER, ENGINEER, and ENGINEER's Consultants shall not be liable to the CONTRACTOR for any claims, costs, losses, or damages incurred or sustained by the CONTRACTOR on or in connection with any other project or anticipated project.

E. REFERENCE POINTS.

4.05, The OWNER shall provide engineering surveys to establish reference points for construction which in the ENGINEER's judgment are necessary to enable the CONTRACTOR to proceed with the WORK. The CONTRACTOR shall be responsible for laying out the WORK (unless otherwise specified in the General Requirements), shall protect and preserve the established reference points and shall make no changes or relocations without the prior written approval of the OWNER. The CONTRACTOR shall report to the ENGINEER whenever any reference point or property monument is lost or destroyed or requires relocation because of necessary changes in grades or locations, and shall be responsible for the accurate replacement or relocation of such reference points and property monuments by professionally qualified personnel.

F. HAZARDOUS ENVIRONMENTAL CONDITION AT SITE

4.06.1. Reports and Drawings: Reference is made to the Supplemental General Conditions for the identification of those reports and drawings relating to a Hazardous Environmental Condition identified at the Site, if any, that have been utilized by the ENGINEER in the preparation of the CONTRACT DOCUMENTS.

4.06.2. Limited Reliance by CONTRACTOR on Technical Data Authorized: The CONTRACTOR may rely upon the general accuracy of the "technical data" contained in such reports and drawings, but such reports and drawings are not CONTRACT DOCUMENTS. Such "technical data" is identified in the Supplemental General Conditions. Except for such reliance on such "technical data", the CONTRACTOR may not rely upon or make any claim against the OWNER, ENGINEER or any of the ENGINEER's consultants with respect to:

a. the completeness of such reports and drawings for the CONTRACTOR's purposes, including, but not limited to, any aspects of the means, methods, techniques, sequences and procedures of construction to be employed by the CONTRACTOR and safety precautions and programs incident thereto; or

b. other data, interpretations, opinions and information contained in such reports or shown or indicated in such drawings; or

c. any CONTRACTOR interpretation of or conclusion drawn from any "technical data" or any such data, interpretations, opinions, or information.

4.06.3. The CONTRACTOR shall not be responsible for any Hazardous Environmental Condition uncovered or revealed at the Work Site which was not shown or indicated in the Drawings and Specification or indentified in the CONTRACT DOCUMENTS to be within the scope of the Work. The CONTRACTOR shall be responsible for a Hazardous Environmental Condition created with any materials brought to the Site by the CONTRACTOR, Subcontractors, Suppliers, or anyone else for whom the CONTRACTOR is

responsible.

4.06.4. If the CONTRACTOR encounters a Hazardous Environmental Condition or if the CONTRACTOR or anyone for whom the CONTRACTOR is responsible creates a Hazardous Environmental Condition, the CONTRACTOR shall immediately: (i) secure or otherwise isolate such condition; (ii) stop all work in connection with such hazardous condition and in any area affected thereby (except in an emergency as required by Article 6; and (iii) notify the OWNER and ENGINEER (and promptly thereafter confirm such notice in writing).

a. The OWNER shall promptly consult with the ENGINEER concerning the necessity for the OWNER to retain a qualified expert to evaluate such hazardous condition or take corrective action, if any.

4.06.5. The CONTRACTOR shall not be required to resume work in connection with such hazardous condition or in any such affected area until after the OWNER has obtained any required permits related thereto and deliver to the CONTRACTOR special written notice: (i) specifying that such condition and any affected area is or has been rendered safe for the resumption of Work, or (ii) specifying any special conditions under which such Work may be resumed safely.

a. If the OWNER and CONTRACTOR cannot agree as to entitlement to or the amount or extent of an adjustment, if any, in the CONTRACT PRICE or CONTRACT TIMES as a result of such Work stoppage or such special conditions under which Work is agreed by the CONTRACTOR to be resumed, either party may make a claim therefore as provided in Articles 11 and 12.

4.06.6. If after receipt of such special written notice the CONTRACTOR does not agree to resume such Work based on a reasonable belief it is unsafe, or does not agree to resume such Work under such special conditions, then the OWNER may order such portion of the Work that is in connection with such hazardous condition or in such affected area to be deleted from the Work.

a. If the OWNER and CONTRACTOR cannot agree as to entitlement to or the amount or extent of an adjustment, if any, in the CONTRACT PRICE or CONTRACT TIMES as a result of deleting such portion of the Work, then either party may make a claim therefore as provided in Articles 11 and 12.

b. The OWNER may have such deleted portion of the Work performed by the OWNER's own forces or others in accordance with Article 7.

4.06.7. To the fullest extent permitted by Laws and Regulations, the OWNER shall indemnify and hold harmless the CONTRACTOR, Subcontractors, ENGINEER, ENGINEER's Consultants and the officers, directors, employees, agents, other consultants and subcontractors of each and any of them from and against all claims, costs, losses and damages (including but not limited to all fees and charges of engineers, attorneys, and other professionals and all court or arbitration or other dispute resolution costs) arising out of or relating to a Hazardous Environmental Condition, provided that such Condition: (i) was not shown or indicated in the Drawings or Specifications or identified in the CONTRACT DOCUMENTS to be included within the scope of the Work, and (ii) was not created by the CONTRACTOR or by anyone for whom the CONTRACTOR is responsible. Nothing in this Paragraph shall obligate the OWNER to indemnify any individual or entity from and against the consequences of that individual's or entity's own negligence.

4.06.8. To the fullest extent permitted by Laws and Regulations, the CONTRACTOR shall indemnify and hold harmless the OWNER and ENGINEER, and the officers, directors, partners, employees, agents, consultants, and subcontractors of each and any of them from and against all claims, costs, losses, and damages (including but not limited to all fees and charges of engineers, attorneys, and other professionals and all court or arbitration or other dispute resolution costs) arising out of or relating to a Hazardous Environmental Condition created by the CONTRACTOR or by anyone for whom the CONTRACTOR is responsible. . Nothing in this Paragraph shall obligate the CONTRACTOR to indemnify any individual or entity from and against the consequences of that individual's or entity's own negligence.

4.06.9. The provisions of Paragraphs B, C and D do not apply to a Hazardous Environmental uncovered or revealed at the Work Site.

ARTICLE 5 — BONDS AND INSURANCE.

A. PERFORMANCE, PAYMENT AND OTHER BONDS:

5.01.1. The CONTRACTOR shall furnish PERFORMANCE and PAYMENT BONDS, each in an amount at least equal to the CONTRACT PRICE as security for the faithful performance and payment of all CONTRACTOR's obligations under the CONTRACT DOCUMENTS. These BONDS shall remain in effect at least until one year after the date when final payment becomes due, except as otherwise provided by LAW or REGULATION or by the CONTRACT DOCUMENTS. The CONTRACTOR shall also furnish such other Bonds as are required by the Supplemental General Conditions.

5.01.2. All BONDS shall be in the forms prescribed by the CONTRACT DOCUMENTS, except as provided by LAWS or REGULATIONS, and be executed by such sureties as are named in the current list of "Companies Holding Certificates of Authority as Acceptable Sureties on Federal Bonds and as Acceptable Reinsuring Companies" as published in Circular 570 (amended) by the

Audit Staff, Bureau of Government Financial Operations, U.S. Treasury Department. All BONDS signed by an agent must be accompanied by a certified copy of such agent's authority to act.

5.01.3. If the surety on any BOND furnished by the CONTRACTOR is declared a bankrupt or becomes insolvent or its right to do business is terminated in any state where any part of the Project is located or it ceases to meet the requirements of paragraph 5.01.2, the CONTRACTOR shall promptly notify the OWNER and ENGINEER and shall, within 20 days after the event giving rise to such notification, provide another bond and surety, both of which shall comply with the requirements of Paragraph 5.01.2 and Paragraph B, and shall be acceptable to the OWNER.

B. LICENSED SURETIES AND INSURERS

5.02. All BONDS and insurance required by the CONTRACT DOCUMENTS to be purchased and maintained by the OWNER or CONTRACTOR shall be obtained from surety or insurance companies that are duly licensed or authorized in the jurisdiction in which the Project is located to issue the BONDS or insurance policies for the limits and coverages so required.
Such surety and insurance companies shall also meet such additional requirements and qualifications as may be provided in the Supplemental General Conditions.

C. CERTIFICATES OF INSURANCE

5.03.1. The CONTRACTOR shall deliver to the OWNER, with copies to each additional insured identified in the Supplemental General Conditions, certificates of insurance (and other evidence of insurance requested by the OWNER or any other additional insured) which the CONTRACTOR is required to purchase and maintain in accordance with Article 5.

5.03.2. The OWNER shall deliver to the CONTRACTOR, with copies to each additional insured identified in the Supplemental Conditions, certificates of insurance (and other evidence of insurance requested by the CONTRACTOR or any other additional insured) which the OWNER is required to purchase and maintain in accordance with Article 5.

D. CONTRACTOR'S LIABILITY INSURANCE:

5.04.1. The CONTRACTOR shall purchase and maintain such comprehensive general liability and other insurance as is appropriate for the WORK being performed and furnished and as will provide protection from claims set forth below which may arise out of or result from the CONTRACTOR's performance and furnishing of the WORK and CONTRACTOR's other obligations under the CONTRACT DOCUMENTS, whether it is to be performed or furnished by the CONTRACTOR, any Subcontractor or Supplier, or by anyone directly or indirectly employed by any of them to perform or furnish any of the WORK, or by anyone for whose acts any of them may be liable:

a. Claims under workers' compensation, disability benefits and other similar employee benefit acts;

b. Claims for damages because of bodily injury, occupational sickness or disease, or death of the CONTRACTOR's employees;

c. Claims for damages because of bodily injury, sickness or disease, or death of any person other than the CONTRACTOR's employees;

d. Claims for damages insured by customary personal injury liability coverage which are sustained: (i) by any person as a result of an offense directly or indirectly related to the employment of such person by the CONTRACTOR; or (ii) by any other person for any other reason;

e. Claims for damages, other than to the WORK itself, because of injury to or destruction of tangible property wherever located, including loss of use resulting there from; and

f. Claims for damages because of bodily injury or death of any person or property damage arising out of the ownership, maintenance or use of any motor vehicle.

5.04.2. The policies of insurance so required by paragraph 5.04 to be purchased and maintained shall:

a. with respect to insurance required by paragraphs 5.04, include as additional insured (subject to any customary exclusion in respect of professional liability) the OWNER, ENGINEER, and any other persons or entities identified in the Supplemental General Conditions, all of whom shall be listed as additional insured, and include coverage for the respective officers, directors, partners, employees, agents, consultants and subcontractors of each and any of all such additional insured, and the insurance afforded to these additional insured shall provide primary coverage for all claims covered thereby;

b. include at least the specific coverages and be written for not less than the limits of liability provided in the Supplemental General Conditions or required by Laws and Regulations, whichever is greater;

c. include completed operations insurance;

d. include contractual liability insurance covering the CONTRACTOR's indemnity obligations under applicable portions of Article 6;

e. contain a provision or endorsement that the coverage afforded will not be cancelled, materially changed or renewal refused until at least 30 days prior written notice has been given to the OWNER and CONTRACTOR and to each other additional insured identified in the Supplemental General Conditions to whom a certificate of insurance has been issued (and the certificates of insurance furnished by the CONTRACTOR pursuant to Article 5 will so provide);

f. remain in effect in effect at least until final payment and at all times thereafter when the CONTRACTOR may be correcting, removing or replacing defective WORK in accordance with Article 13; and

g. with respect to completed operations insurance, and any insurance coverage written on a claims-made basis, remain in effect for at least two years after final payment.

(1) the CONTRACTOR shall furnish the OWNER and each other additional insured identified in the Supplemental General Conditions to whom a certificate of insurance has been issued evidence, satisfactory to the OWNER and any such additional insured, of continuation of such insurance at final payment and one year thereafter.

E. OWNER'S LIABILITY INSURANCE:

5.05. In addition to the insurance required to be provided by the CONTRACTOR under paragraph 5.04, the OWNER, at the OWNER's option, may purchase and maintain at the OWNER's expense the OWNER's own liability insurance as will protect the OWNER against claims which may arise from operations under the CONTRACT DOCUMENTS.

F. PROPERTY INSURANCE:

5.06.1. Unless otherwise provided in the Supplemental General Conditions, the OWNER shall purchase and maintain property insurance upon the WORK at the site in the amount of the full replacement cost thereof (subject to such deductible amounts as may be provided in the Supplemental General Conditions or required by LAWS and REGULATIONS). This insurance shall:

a. include the interests of the OWNER, CONTRACTOR, Subcontractors, ENGINEER and ENGINEER's consultants and any other persons or entities identified in the Supplemental General Conditions, each of whom is deemed to have an insurable interest and shall be listed as an insured or additional issued;

b. be written on a Builder's Risk "all risk" or open peril or special causes of loss policy form that shall at least include insurance for physical loss and damage to the Work, temporary buildings, false work and Work in transit and shall insure against at least the following perils or causes of loss: fire, lightning, extended coverage, theft, vandalism and malicious mischief, earthquake, collapse, debris removal, demolition occasioned by enforcement of Laws and Regulations, water damage (other than caused by flood), and such other perils as may be specifically required by the Supplementary General Conditions;

c. include expenses incurred in the repair or replacement of any insured property (including but not limited to fees and charges of engineers and architects);

d. cover materials and equipment stored at the site or at another location that was agreed to in writing by the OWNER prior to being incorporated in the Work, provided that such materials and equipment have been included in an Application for Payment recommended by the ENGINEER;

e. allow for partial utilization of the Work by the OWNER;

f. include testing and startup; and

g. be maintained in effect until final payment is made unless otherwise agreed to in writing by the OWNER, CONTRACTOR and ENGINEER with 30 days written notice to each other additional insured to whom a certificate of insurance has been issued.

5.06.2. The OWNER shall purchase and maintain such boiler and machinery insurance or additional property insurance as may be required by the Supplemental General Conditions or LAWS and REGULATIONS which will include the interests of the OWNER, CONTRACTOR, Subcontractors, ENGINEER and ENGINEER's consultants and any other persons or entities identified in the Supplemental Conditions, each of whom is deemed to have an insurable interest and shall be listed as insured or additional insured.

5.06.3. All the policies of insurance (and the certificates or other evidence thereof) required to be purchased and maintained by the OWNER in accordance with applicable portions of Article 5 will contain a provision or endorsement that the coverage afforded will not be cancelled or materially changed or renewal refused until at least thirty days' prior written notice has been given to the OWNER and CONTRACTOR and to each other additional insured to whom a certificate of insurance has been issued and will contain waiver provisions in accordance with applicable portions of Article 5.

5.06.4. The OWNER shall not be responsible for purchasing and maintaining any property insurance to protect the interests of the CONTRACTOR, Subcontractors or others in the WORK to the extent of any deductible amounts that are provided in the Supplementary Conditions. The risk of loss within such identified deductible amount, will be borne by the CONTRACTOR, Subcontractors or others suffering any such loss and if any of them wishes property insurance coverage within the limits of such amounts, each may purchase and maintain it at the purchaser's own expense.

5.06.5. If the CONTRACTOR requests in writing that other special insurance be included in the property insurance policies, provided under applicable portions of Article 5, the OWNER shall, if possible, include such insurance, and the cost thereof will be charged to the CONTRACTOR by appropriate CHANGE ORDER. Prior to commencement of the WORK at the site, the OWNER shall in writing advise the CONTRACTOR whether or not such other insurance has been procured by the OWNER.

G. WAIVER OF RIGHTS

5.07.1. The OWNER and CONTRACTOR intend that all policies purchased in accordance with applicable portions of Article 5 will protect the OWNER, CONTRACTOR, Subcontractors, ENGINEER, ENGINEER's Consultants and all other persons or entities identified in the Supplemental Conditions to be listed as insured or additional insured in such policies and will provide primary coverage for all losses and damages caused by the perils covered thereby. All such policies shall contain provisions to the effect that in the event of payment of any loss or damage the insurers will have no rights of recovery against any of the insured or additional insured there under. The OWNER and CONTRACTOR waive all rights against each other and their respective officers, directors, employees and agents for all losses and damages caused by, arising out of or resulting from any of the perils covered by such policies and any other property insurance applicable to the Work; and, in addition, waive all such rights against Subcontractors, ENGINEER, ENGINEER's Consultants and all other persons or entities identified in the Supplemental Conditions to be listed as insured or additional insured under such policies for losses and damages so caused. None of the above waivers shall extend to the rights that any party making such waiver may have to the proceeds of insurance held by the OWNER as trustee or otherwise payable under any policy so issued.

5.07.2. The OWNER waives all rights against the CONTRACTOR, Subcontractors, ENGINEER, ENGINEER's Consultants and the officers, directors, employees and agents of any of them, for:

a. loss due to business interruption, loss of use or other consequential loss extending beyond direct physical loss or

damage to the OWNER's property of the Work caused by , arising out of or resulting from fire or other peril, whether or not insured by the OWNER; and

b. loss or damage to the completed Project or part thereof caused by, arising out of or resulting from fire or other insured peril covered by any property insurance maintained on the completed Project or part thereof by the OWNER during partial utilization pursuant to paragraph 14.10, after substantial completion pursuant to paragraph 14.8 or after final payment pursuant to paragraph 14.13.

5.07.3. Any insurance policy maintained by the OWNER covering any loss, damage or consequential loss referred to in applicable portions of Article 5 shall contain provisions to the effect that in the event of payment of any such loss, damage or consequential loss the insurers will have no rights of recovery against any of the CONTRACTOR, Subcontractors, ENGINEER, ENGINEER's Consultants and the officers, directors, employees and agents of any of them.

H. RECEIPT AND APPLICATION OF PROCEEDS:

5.08.1. Any insured loss under the policies of insurance required by paragraphs 5.7 and 5.8 will be adjusted with the OWNER and made payable to the OWNER as fiduciary for the insured, as their interests may appear, subject to the requirements of any applicable mortgage clause and of paragraph 5.13. The OWNER shall deposit in a separate account any money so received, and shall distribute it in accordance with such agreement as the parties in interest may reach. If no other special agreement is reached the damaged WORK shall be repaired or replaced, the moneys so received applied on account thereof and the WORK and the cost thereof covered by an appropriate CHANGE ORDER.

5.08.2. The OWNER as fiduciary shall have power to adjust and settle any loss with the insurers unless one of the parties in interest shall object in writing within fifteen days after the occurrence of loss to the OWNER's exercise of this power. If such objection be made, the OWNER as fiduciary shall make settlement with the insurers in accordance with such agreement as the parties in interest may reach. If no such agreement among the parties in interest is reached, the OWNER as fiduciary shall adjust

and settle the loss with the insurers and, if required in writing by any party in interest, the OWNER as fiduciary shall give bond for the proper performance of such duties.

I. ACCEPTANCE OF BONDS AND INSURANCE; OPTION TO REPLACE:

5.09. If either party (the OWNER or CONTRACTOR) has any objection to the coverage afforded by or other provisions of the Bonds or insurance required to be purchased and maintained by the other party in accordance with Article 5 on the basis of non-conformance with the CONTRACT DOCUMENTS, the objecting party shall so notify the other party in writing within ten days after receipt of the certificates (or other evidence requested) required by paragraph 2.7. the OWNER and CONTRACTOR shall each provide to the other such additional information in respect of insurance provided as the other may reasonably request. If either party does not purchase or maintain all of the Bonds and insurance required of such party by the CONTRACT DOCUMENTS, such party shall notify the other party in writing of such failure to purchase prior to the start of Work, or of such failure to maintain prior to any change in the required coverage. Without prejudice to any other right or remedy, the other party may elect to obtain equivalent Bonds or insurance to protect such other party's interests at the expense of the party who was required to provide such coverage, and a Change Order shall be issued to adjust the Contract Price accordingly.

J. PARTIAL UTILIZATION, ACKNOWLEDGMENT OF PROPERTY INSURANCE:

5.10. If the OWNER finds it necessary to occupy or use a portion or portions of the WORK prior to SUBSTANTIAL COMPLETION of all the WORK, such use or occupancy may be accomplished in accordance with paragraph 14.10; provided that no such use or occupancy shall commence before the insurers providing the property insurance have acknowledged notice thereof and in writing effected any changes in coverage necessitated thereby. The insurers providing the property insurance shall consent by endorsement on the policy or policies, but the property insurance shall not be cancelled or permitted to lapse on account of any such partial use or occupancy.

ARTICLE 6 --- CONTRACTOR'S RESPONSIBILITIES.

A. SUPERVISION AND SUPERINTENDENCE:

6.01.1. The CONTRACTOR shall supervise, inspect and direct the WORK competently and efficiently, devoting such attention thereto and applying such skills and expertise as may be necessary to perform the WORK in accordance with the CONTRACT DOCUMENTS. The CONTRACTOR shall be solely responsible for the means, methods, techniques, sequences and procedures of construction. The CONTRACTOR shall not be responsible for the negligence of OWNER or ENGINEER in the design or specifications of a specific means, method, technique, sequence or procedure of construction which is shown or indicated in and expressly required by the CONTRACT DOCUMENTS.

6.01.2. The CONTRACTOR shall be responsible to see that the completed WORK complies accurately with the CONTRACT DOCUMENTS.

6.01.3. At all times during its progress of the Work, the CONTRACTOR shall assign a competent resident superintendent, who shall not be replaced without written notice to the OWNER and ENGINEER, except under extra-ordinary circumstances. The superintendent will be the CONTRACTOR's representative at the site and shall have authority to act on behalf of the CONTRACTOR. All communications given to or received from the superintendent shall be binding on the CONTRACTOR.

B. LABOR; WORKING HOURS

6.02.1. The CONTRACTOR shall provide competent, suitably qualified personnel to survey and lay out the Work and perform construction as required by the CONTRACT DOCUMENTS. The CONTRACTOR shall at all times maintain good discipline and order at the Work site.

6.02..2. Except as otherwise required for the safety or protection of persons or the Work or property at the Work site or adjacent thereto, and except as otherwise stated in the CONTRACT DOCUMENTS, all Work at the site shall be performed during regular working hours. The CONTRACTOR will not permit the performance of Work on a Saturday, Sunday, or any legal holiday without the OWNER's written consent (which will not be unreasonably withheld) given after prior written notice to the ENGINEER.

C. SERVICES, MATERIALS, AND EQUIPMENT

6.03.1. Unless otherwise specified in the General Requirements, the CONTRACTOR shall furnish and assume full responsibility for all services, materials, equipment, labor, transportation, construction equipment and machinery, tools, appliances, fuel, power, light, heat, telephone, water, sanitary facilities, temporary facilities and all other facilities and incidentals necessary for the performance, testing, start-up and completion of the WORK.

6.03.2. All materials and equipment incorporated into the Work shall be as specified or, if not specified, shall be of good quality and new, except as otherwise provided in the CONTRACT DOCUMENTS. All special warranties and guarantees required by the Specifications shall expressly run to the benefit of the OWNER. If required by the ENGINEER, the CONTRACTOR shall

furnish satisfactory evidence (including reports of required tests) as to the source, kind and quality of materials and equipment.

6.03.3. All materials and equipment shall be stored, applied, installed, connected, erected, protected, used, cleaned and conditioned in accordance with instructions of applicable Supplier, except as otherwise provided in the CONTRACT DOCUMENTS.

D. PROGRESS SCHEDULE:

6.04.1. The CONTRACTOR shall adhere to the progress schedule established in accordance with paragraph 2.9 as it may be adjusted from time to time as provided below:

a. The CONTRACTOR shall submit to the ENGINEER for acceptance (to the extent indicated in paragraph 2.9) proposed adjustments in the Progress Schedule that will not change the Contract Times (or Milestones). Such adjustments will conform generally to the Progress Schedule then in effect and additionally will comply with any provisions of the General Requirements applicable thereto.

b. Proposed adjustments in the Progress Schedule that will change the Contract Times (or Milestones) shall be submitted in accordance with the requirements of Article 12. Adjustments In Contract Times may only be made by a Change Order in accordance with Article 12.

E. SUBSTITUTES OR "OR-EQUAL" ITEMS:

6.05.1. Whenever an item of material or equipment is specified or described in the CONTRACT DOCUMENTS by using the name of a proprietary item or the name of a particular Supplier, the specification or description is intended to establish the type, function, appearance, and quality required. Unless the specification or description contains or is followed by words reading that no like, equivalent or “or-equal” item or no substitution is permitted, other items of material or equipment or material or equipment of other Suppliers may be accepted by the ENGINEER under the following circumstances described below:

a. “Or-Equal” Items: If in the ENGINEER’s sole discretion an item of material or equipment proposed by the CONTRACTOR is functionally equal to that named and sufficiently similar so that no change in related Work will be required, it may be considered by the ENGINEER as an “or-equal” item, in which case review and approval of the proposed item may, in the ENGINEER’S sole discretion, be accomplished without compliance with some or all of the requirements for acceptance of proposed substitute items. For the purposes of this paragraph, a proposed item of material or equipment will be considered functionally equal to an item named if:

(1) in the exercise of reasonable judgment the ENGINEER determines that:

(a) it is at least equal in materials of construction, quality, durability, appearance, strength and design characteristics;

(b) it will reliably perform at least equally well the function and achieve the results imposed by the design concept of the completed project as a functioning whole;

(c) it has a proven record of performance and availability of responsive service; and

(2) the CONTRACTOR certifies that, if approved and incorporated into the Work:

(a) there will be no increase in cost to the OWNER or increase in Contract Times; and

(b) it will conform substantially to the detailed requirements of the item named in the CONTRACT DOCUMENTS.

b. Substitute Items:

(1) If in the ENGINEER’s sole discretion an item of material or equipment proposed by the CONTRACTOR does not qualify as an “or-equal” item under paragraph “a” above, it will be considered a proposed substitute item.

(2) The CONTRACTOR shall submit sufficient information as provided below to allow the ENGINEER to determine that the item of material or equipment proposed is essentially equivalent to that named and an acceptable substitute therefore. Requests for review of proposed substitute items of material or equipment will not be accepted by the ENGINEER from anyone other than the CONTRACTOR.

(3) The requirements for review by the ENGINEER will be as set forth in the applicable portions of the General Requirements and as the ENGINEER may decide is appropriate under the circumstances.

(4) If the CONTRACTOR wishes to furnish or use a substitute item of material or equipment, the CONTRACTOR shall make written application to the ENGINEER for review of a proposed substitute item of material or equipment that the CONTRACTOR seeks to furnish or use. The application:

(a) shall certify that the proposed substitute item will:

(i) perform adequately the functions and achieve the results called for by the general design;

(ii) be similar in substance to that specified; and

(iii) be suited to the same use as that specified.

(b) will state:

(i) the extent, if any, to which the use of the proposed substitute item will prejudice the CONTRACTOR’s achievement of Substantial Completion on time;

(ii) whether or not acceptance of the substitute for use in the WORK will require a change in any of the CONTRACT DOCUMENTS (or in the provisions of any other direct contract with the OWNER for work on the Project) to adapt the

design to the proposed substitute item;

(iii) whether or not incorporation or use of the substitute item in connection with the WORK is subject to payment of any license fee or royalty.

(c) will identify:

(i) all variations of the proposed substitute from that specified; and

(ii) available engineering, sales, maintenance, repair and replacement service.

(d) and shall contain an itemized estimate of all costs or credits that will result directly or indirectly from use of such substitute item, including costs of redesign and claims of other contractors affected by the resulting change, all of which shall be considered by the ENGINEER in evaluating the proposed substitute.

(5) The ENGINEER may require the CONTRACTOR to furnish additional data about the proposed substitute item.

6.05.2. Substitute Construction Methods or Procedures: If a specific means, method, technique, sequence or procedure of construction is expressly required by the CONTRACT DOCUMENTS, the CONTRACTOR may furnish or utilize a substitute means, method, technique, sequence or procedure of construction acceptable to the ENGINEER. The CONTRACTOR shall submit sufficient information to allow the ENGINEER, in the ENGINEER's sole discretion, to determine that the substitute proposed is equivalent to that expressly called for by the CONTRACT DOCUMENTS. The requirements for review by the ENGINEER will be similar to those provided in paragraph 6.05.1.b.

6.05.3. Engineer's Evaluation: The ENGINEER will be allowed a reasonable time within which to evaluate each proposal or submittal made pursuant to applicable portions of Article 6. The ENGINEER will be the sole judge of acceptability. No "or-equal" or substitute will be ordered, installed or utilized until the ENGINEER's review is complete, which will be evidenced by either a CHANGE ORDER for a substitute or an approved SHOP DRAWING for an "or equal". The ENGINEER will advise the CONTRACTOR in writing of any negative determination.

6.05.4. Special Guarantee: The OWNER may require the CONTRACTOR to furnish at the CONTRACTOR's expense a special performance guarantee or other surety with respect to any substitute.

6.05.5. Engineer's Cost Reimbursement: The ENGINEER will record the ENGINEER's costs in evaluating a substitute proposed or submitted by the CONTRACTOR pursuant to applicable portions of Article 6. Whether or not the ENGINEER accepts a substitute item so proposed or submitted by the CONTRACTOR, the CONTRACTOR shall reimburse the OWNER for the charges of the ENGINEER for making changes in the CONTRACT DOCUMENTS (or in the provisions of any other direct contract with the OWNER) resulting from the acceptance of each proposed substitute item.

F. CONCERNING SUBCONTRACTORS, SUPPLIERS AND OTHERS:

6.06.1. The CONTRACTOR shall not employ any Subcontractor, Supplier or other person or organization (including those acceptable to the OWNER and ENGINEER as indicated in Article 6), whether initially or as a replacement, against whom the OWNER or ENGINEER may have reasonable objection. The CONTRACTOR shall not be required to employ any Subcontractor, Supplier or other person or organization to furnish or perform any of the WORK against whom the CONTRACTOR has reasonable objection.

6.06.2. If the Supplemental General Conditions require the identity of certain Subcontractors, Suppliers or other persons or organizations (including those who are to furnish the principal items of materials and equipment) to be submitted to the OWNER in advance for acceptance by the OWNER and ENGINEER by a specified date prior to the Effective Date of the AGREEMENT, and if the CONTRACTOR has submitted a list thereof in accordance with the Supplemental General Conditions, the OWNER or ENGINEER's acceptance (either in writing or by failing to make written objection thereto by the date indicated for acceptance or objection in the bidding documents or the CONTRACT DOCUMENTS) of any such Subcontractor, Supplier or other person or organization so identified may be revoked on the basis of reasonable objection after due investigation. The CONTRACTOR shall submit an acceptable substitute for the rejected Subcontractor, Supplier, or other individual on entity, and the CONTRACT PRICE will be adjusted by the difference in the cost occasioned by such substitution and an appropriate CHANGE ORDER will be issued. No acceptance by the OWNER or ENGINEER of any such Subcontractor, Supplier or other person or organization shall constitute a waiver or any right of the OWNER or ENGINEER to reject defective WORK.

6.06.3. The CONTRACTOR shall be fully responsible to the OWNER and ENGINEER for all acts and omissions of the Subcontractors, Suppliers and other persons and organizations performing or furnishing any of the WORK just as the CONTRACTOR is responsible for the CONTRACTOR's own acts and omissions. Nothing in the CONTRACT DOCUMENTS:

a. shall create for the benefit of any such Subcontractor, Supplier or other person or organization any contractual relationship between the OWNER or ENGINEER and any such Subcontractor, Supplier or other person or organization; nor

b. shall create any obligation on the part of the OWNER or ENGINEER to pay or to see to the payment of any moneys due any such Subcontractor, Supplier or other person or organization except as may otherwise be required by LAWS and REGULATIONS.

6.06.4. The CONTRACTOR shall be solely responsible for scheduling and coordinating the Work of Subcontractors, Suppliers and other persons and organizations performing or furnishing any of the Work under a direct or indirect contract with the

CONTRACTOR.

6.06.5 The CONTRACTOR shall require all Subcontractors, Suppliers and such other persons and organizations performing and furnishing any of the Work to communicate with the ENGINEER through the CONTRACTOR.

6.06.6. The divisions and sections of the Specifications and the identifications of any DRAWING shall not control the CONTRACTOR in dividing the WORK among Subcontractors or Suppliers or delineating the WORK to be performed by any specific trade.

6.06.7. All WORK performed for the CONTRACTOR by a Subcontractor or Supplier will be pursuant to an appropriate agreement between the CONTRACTOR and the Subcontractor or Supplier which specifically binds the Subcontractor or Supplier to the applicable terms and conditions of the CONTRACT DOCUMENTS for the benefit of the OWNER and ENGINEER. Whenever any such agreement is with a Subcontractor or Supplier who is listed as an additional insured on the property insurance provided in applicable portions of Article 5, the agreement between the CONTRACTOR and the Subcontractor or Supplier will contain provisions whereby the Subcontractor or Supplier waives all rights against the OWNER, CONTRACTOR, ENGINEER, ENGINEER's Consultants and all other additional insured for all losses and damages caused by, arising out of or resulting from any of the perils covered by such policies and any other property insurance applicable to the Work. If the insurers on any such policies require separate waiver forms to be signed by any Subcontractor or Supplier, the CONTRACTOR will obtain the same.

G. PATENT FEES AND ROYALTIES:

6.07.1. The CONTRACTOR shall pay all license fees and royalties and assume all costs incident to the use in the performance of the WORK or the incorporation in the WORK of any invention, design, process, product or device which is the subject of patent rights or copyrights held by others. If a particular invention, design, process, product or device is specified in the CONTRACT DOCUMENTS for use in the performance of the WORK and if to the actual knowledge of the OWNER or ENGINEER its use is subject to patent rights or copyrights calling for the payment of any license fee or royalty to others, the existence of such rights shall be disclosed by the OWNER in the CONTRACT DOCUMENTS.

6.07.2. To the fullest extent permitted by Laws and Regulations, the CONTRACTOR shall indemnify and hold harmless the OWNER, ENGINEER, ENGINEER's Consultants and the officers, directors, employees, agents and other consultants of each and any of them from and against all claims, costs, losses and damages (including but not limited to all fees and charges of engineers, attorneys, and other professionals and all court or arbitration or other dispute resolution costs) arising out of or resulting from any infringement of patent rights or copyrights incident to the use in the performance of the WORK or resulting from the incorporation in the WORK of any invention, design, process, product or device not specified in the CONTRACT DOCUMENTS.

H. PERMITS:

6.08. Unless otherwise provided in the Supplemental General Conditions, the CONTRACTOR shall obtain and pay for all construction permits and licenses. The OWNER shall assist the CONTRACTOR, when necessary, in obtaining such permits and licenses. The CONTRACTOR shall pay all governmental charges and inspection fees necessary for the prosecution of the WORK, which are applicable at the time of opening of BIDS, or, if there are no BIDS, on the Effective Date of the AGREEMENT. The OWNER shall pay all charges of utility owners for connections for providing permanent service to the WORK.

I. LAWS AND REGULATIONS:

6.09.1 The CONTRACTOR shall give all notices and comply with all Laws and Regulations applicable to the performance of the Work. Except where otherwise expressly required by applicable Laws and Regulations, neither the OWNER nor ENGINEER shall be responsible for monitoring the CONTRACTOR's compliance with any Laws or Regulations.

6.09.2 If the CONTRACTOR performs any Work knowing or having reason to know that it is contrary to Laws or Regulations, the CONTRACTOR shall bear all claims, costs, losses and damages (including but not limited to all fees and charges of engineers, attorneys, and other professionals and all court or arbitration or other dispute resolution costs) arising out of or relating to such Work. However, it shall not be the CONTRACTOR's primary responsibility to make certain that the Specifications and Drawings are in accordance with Laws and Regulations, but this shall not relieve the CONTRACTOR of CONTRACTOR's obligations under Article 3.

6.09.3. Changes in Laws or Regulations not known at the time of the opening of Bids (or, on the Effective Date of the Agreement if there were no Bids) having an effect on the cost or time of performance of the Work shall be the subject of an adjustment in the Contract Price or Contract Times. If the OWNER and CONTRACTOR are unable to agree on entitlement to or on the amount or extent, if any, of any such adjustment, a Claim may be made therefore as provide in Article 10.

J. TAXES:

6.10. The CONTRACTOR will pay all sales, consumer, use and other similar taxes required to be paid by the CONTRACTOR in accordance with the Laws and Regulations of the place of the Project which are applicable during the performance of the WORK.

K. USE OF WORK SITE AND OTHER AREAS:

6.11.1. Limitations on the Use of the Work Site and Other Areas:

a. The CONTRACTOR shall confine construction equipment, the storage of materials and equipment, and the operations of workers to the Work site and other areas identified in and permitted by the Contract Documents and as permitted by Laws and Regulations, and shall not unreasonably encumber the Work site and other areas with construction equipment or other materials or equipment. The CONTRACTOR shall assume full responsibility for any damage to any such land or area, or to the owner or occupant thereof, or of any adjacent land or areas, resulting from the performance of the Work.

b. Should any claim be made by any such owner or occupant because of the performance of the Work, the CONTRACTOR shall promptly settle with such other party by negotiation or otherwise resolve the claim by arbitration or other dispute resolution proceeding or at law.

c. The CONTRACTOR shall, to the fullest extent permitted by Laws and Regulations, indemnify and hold harmless the OWNER, ENGINEER, ENGINEER's Consultant and anyone directly or indirectly employed by any of them from and against all

claims, costs, losses and damages (including but not limited to all fees and charges of engineers, attorneys, and other professionals and all court or arbitration or other dispute resolution costs) arising out of or relating to any claim or action, legal or equitable, brought by any such owner or occupant against the OWNER, ENGINEER or any other party indemnified hereunder to the extent caused by or based upon the CONTRACTOR's performance of the Work.

6.11.2. Removal of Debris During Performance of the Work.

a. During the progress of the Work, the CONTRACTOR shall keep the Work site and other areas free from accumulations of waste materials, rubbish and other debris. Removal and disposal of such waste materials, rubbish, and other debris shall conform to applicable Laws and Regulations.

b. Cleaning: Prior to Substantial Completion of the Work, the CONTRACTOR shall clean the Work site and other areas and make it ready for utilization by the OWNER. At the completion of the Work, the CONTRACTOR shall remove from the Work site and other areas all waste materials, rubbish and debris as well as all tools, appliances, construction equipment, and machinery, and surplus materials; and shall restore to original condition all property not designated for alteration by the Contract Documents.

6.11.3. The CONTRACTOR shall not load nor permit any part of any structure to be loaded in any manner that will endanger the structure, nor shall the CONTRACTOR subject any part of the Work or adjacent property to stresses or pressures that will endanger it.

L. RECORD DOCUMENTS:

6.12. The CONTRACTOR shall maintain in a safe place at the Work site one record copy of all Drawings, Specifications, Addenda, Written Amendments, Change Orders, Work Change Directives, Field Orders and written interpretations and clarifications (issued pursuant to Article 9) in good order and annotated to show all changes made during construction. These record documents, together with all approved samples and a counterpart of all approved Shop Drawings, will be available to the ENGINEER for reference. Upon completion of the Work, these record documents, samples and Shop Drawings will be delivered to the ENGINEER for the OWNER.

M. SAFETY AND PROTECTION:

6.13.1. The CONTRACTOR shall be responsible for initiating, maintaining and supervising all safety precautions and

programs in connection with the Work. The CONTRACTOR shall take all necessary precautions for the safety of, and shall provide the necessary protection to prevent damage, injury or loss to:

a. all persons on the Work site or who may be affected by the Work;

b. all the Work and materials and equipment to be incorporated therein, whether in storage on or off the site; and

c. other property at the site or adjacent thereto, including trees, shrubs, lawns, walks, pavements, roadways, structures, utilities and underground facilities not designated for removal, relocation or replacement in the course of construction.

6.13.2. The CONTRACTOR shall comply with all applicable Laws and Regulations of any public body having jurisdiction for the safety of persons or property, or to protect ion of persons or property from damage, injury or loss; and shall erect and maintain all necessary safeguards for such safety and protection. The CONTRACTOR shall notify owners of adjacent property and of underground facilities and utility owners where prosecution of the Work may affect them, and shall cooperate with them in the

protection, removal, relocation and replacement of their property.

6.13.3. All damage, injury or loss to any property referred to in this paragraph M caused, directly or indirectly, in whole or in part, by the CONTRACTOR, any Subcontractor, Supplier or any other person or organization directly or indirectly employed by any of them to perform or furnish any of the Work or anyone for whose acts any of them may be liable, shall be remedied by the CONTRACTOR (except damage or loss attributable to the fault of the Drawings or Specifications or the acts or omissions of the OWNER or ENGINEER or ENGINEER's Consultant or anyone employed by any of them or anyone for whose acts either of them may be liable, and not attributable, directly or indirectly, in whole or in part, to the fault or negligence of the CONTRACTOR or any Subcontractor, Supplier or other person or organization directly or indirectly employed by any of them).

6.13.4. The CONTRACTOR's duties and responsibilities for the safety and protection of the Work shall continue until such time as all the Work is completed and the ENGINEER has issued a notice to the OWNER and CONTRACTOR in accordance with Article 14 that the Work is acceptable (except as otherwise expressly provided in connection with Substantial Completion).

N. SAFETY REPRESENTATIVE:

6.14. The CONTRACTOR shall designate a qualified and experienced safety representative at the Work site whose duties and responsibilities shall be the prevention of accidents and the maintaining and supervising of safety precautions and programs.

O. HAZARD COMMUNICATION PROGRAMS:

6.15. The CONTRACTOR shall be responsible for coordinating any exchange of material safety data sheets or other hazard communication information required to be made available to or exchanged between or among employers at the Work site in accordance with Laws and Regulations.

P. EMERGENCIES:

6.16. In emergencies affecting the safety or protection of persons or the Work or property at the Work site or adjacent thereto, the CONTRACTOR, without special instruction or authorization from the ENGINEER or OWNER, is obliged to act to prevent threatened damage, injury or loss. The CONTRACTOR shall give the ENGINEER prompt written notice if the CONTRACTOR believes that any significant changes in the Work or variations from the Contract Documents have been caused thereby or are required as a result thereof. If the ENGINEER determines that a change in the Contract Documents is required because of the action taken by the CONTRACTOR in response to an emergency, a Work Change Directive or Change Order will be issued to document the consequences of such action.

Q. SHOP DRAWINGS AND SAMPLES:

6.17.1 The CONTRACTOR shall submit Shop Drawings and samples to the ENGINEER for review and acceptance in accordance with the accepted schedule of Shop Drawings and Sample submittals (as required in Article 2). Each submittal will be identified as the ENGINEER may require.

a. Shop Drawings.
(1) Submit number of copies specified in the General Requirements.
(2) Data shown on Shop Drawings will be complete with respect to quantities, dimensions, specified performance and design criteria, materials and similar data to show the ENGINEER the services, materials and equipment the CONTRACTOR proposes to provide and to enable the ENGINEER to review the information for the limited purposes required by Article 6.

b. Samples. The CONTRACTOR shall also submit Samples to the ENGINEER for review and acceptance in accordance with the accepted schedule of Shop Drawings and Sample submittals.
(1) Submit number of Samples as specified in the Specifications.
(2) Clearly identified each sample as to material, Supplier, pertinent data such as catalog numbers and the use for which intended and other data as the ENGINEER may require to enable the ENGINEER to review the submittal for the limited purposes required by Article 6.

6.17.2. Where a Shop Drawing or Sample is required by the CONTRACT DOCUMENTS or the Schedule or Submittals, any related Work performed prior to the ENGINEER's review and acceptance of the pertinent submittal will be at the sole expense and responsibility of the CONTRACTOR.

6.17.3. Submittal Procedures:

a. Before submitting each Shop Drawing or Sample, the CONTRACTOR shall have determined and verified:
(1) all field measurements, quantities, dimensions, specified performance criteria, installation requirements, materials, catalog numbers and similar information with respect thereto;
(2) the suitability of all materials with respect to intended use, fabrication, shipping, handling, storage, assembly and installation pertaining to the performance of the Work;

(3) all information relative to the CONTRACTOR's sole responsibilities in respect of means, methods, techniques, sequences and procedures of construction and safety precautions and programs incident thereto; and

(4) shall also have reviewed and coordinated each Shop Drawing or Sample with other Shop Drawings and Samples and with the requirements of the Work and the Contract Documents.

b. Each submittal will bear a stamp or specific written indication that the CONTRACTOR has satisfied the CONTRACTOR's obligations under the Contract Documents with respect to the CONTRACTOR's review and approval of that submittal.

c. With each submission, the CONTRACTOR shall give the ENGINEER specific written notice of such variations, if any, that the Shop Drawings or Samples submitted may have from the requirements of the Contract Documents. This notice shall be both a written communication separate from the Shop Drawing's or Sample submittal; and, in addition, by a specific notation made on each Shop Drawing and Sample submitted to the ENGINEER for review and acceptance of each such variation.

6.17.4. ENGINEER's REVIEW.

a. The ENGINEER will provide timely review of Shop Drawings and Samples in accordance with the schedule of Shop Drawings and Sample submittals accepted by the ENGINEER. The ENGINEER's review and acceptance will be only to determine if the items covered by the submittals will, after installation or incorporation in the Work, conform to the information given in the Contract Documents and be compatible with the design concept of the completed Project as a functioning whole as indicated by the Contract Documents.

b. The ENGINEER's review and acceptance will not extend to means, methods, techniques, sequences or procedures of constructions (except where a particular means, method, technique, sequence or procedure of construction is specifically and expressly called for by the Contract Documents) or to safety precautions or programs incident thereto. The review and acceptance of a separate item as such will not indicate acceptance of the assembly in which the item functions. The CONTRACTOR shall make corrections required by the ENGINEER, and shall return the required number of corrected copies of Shop Drawings and submit as required new Samples for review and acceptance. The CONTRACTOR shall direct specific attention in writing to revisions other than the corrections called for by the ENGINEER on previous submittals.

c. The ENGINEER's review and acceptance of Shop Drawings or Samples shall not relieve the CONTRACTOR from responsibility for any variation from the requirements of the Contract Documents unless the CONTRACTOR has complied with the requirements of applicable portions of Article 6 and in writing called the ENGINEER's attention to each such variation at the time of submission; and the ENGINEER has given written acceptance of each such variation by a specific written notation thereof incorporated in or accompanying the Shop Drawings or Sample acceptance; nor will any acceptance by the ENGINEER relieve the CONTRACTOR from responsibility for complying with the requirements of applicable portions of Article 6.

d. Where a Shop Drawing or Sample is required by the Contract Documents, any related Work performed prior to the ENGINEERS's review and acceptance of the pertinent submittal will be at the sole expense and responsibility of the CONTRACTOR.

6.17.5. Resubmittal Procedures.

a. The CONTRACTOR shall make corrections required by the ENGINEER and shall return the required number of corrected copies of the Shop Drawings and submit, as required, new Samples for review and acceptance. The CONTRACTOR shall direct specific attention in writing to revisions other than the corrections called for by the ENGINEER on previous submittals.

R. CONTINUING THE WORK:

6.18. The CONTRACTOR shall carry on the Work and adhere to the progress schedule during all disputes or disagreements with the OWNER. No Work shall be delayed or postponed pending resolution of any disputes or disagreements, except as permitted by Article 15 or as the CONTRACTOR and OWNER may otherwise agree in writing.

S. CONTRACTOR'S GENERAL WARRANTY AND GUARANTEE:

6.19.1. The CONTRACTOR warrants and guarantees to the OWNER, ENGINEER and ENGINEER's Consultants that all Work will be in accordance with the Contract Documents and will not be defective. The ENGINEER and its related entities shall be entitled to rely on representation of the CONTRACTOR's warranty and guarantee.

6.19.2. The CONTRACTOR's warranty and guarantee hereunder excludes defects or damage caused by:

a. abuse, modification or improper maintenance or operation by persons other than the CONTRACTOR, Subcontractors, Suppliers, or other individual or entity for whom the CONTRACTOR is responsible; or

b. normal wear and tear under normal usage.

6.19.3. The CONTRACTOR's obligation to perform and complete the Work in accordance with the Contract Documents shall be absolute. None of the following will constitute an acceptance of the Work that is not in accordance with the Contract Documents or a release of the CONTRACTOR's obligation to perform the Work in accordance with the Contract Documents:

a. observations by the ENGINEER;

b. recommendation by the ENGINEER or payment by the OWNER of any progress or final payment;

c. issuance of a certificate of Substantial Completion by the ENGINEER or any payment related thereto by the OWNER;

d. use or occupancy of the Work or any part thereof by the OWNER;

e. any review and acceptance of a Shop Drawing or Sample submittal or the issuance of a notice of acceptability by the ENGINEER;

f. any inspection, test of approval by others; or

g. any correction of defective Work by the OWNER.

T. INDEMNIFICATION:

6.20.1. To the fullest extent permitted by Laws and Regulations, the CONTRACTOR shall indemnify and hold harmless the OWNER, ENGINEER, and ENGINEER's Consultants and the officers, directors, employees, agents and other consultants of each and any of them from and against all claims, costs, losses, and damages (including but not limited to fees and charges of engineers, architects, attorneys and other professionals and all court and arbitration or other dispute resolution costs) arising out of or relating to the performance of the Work, provided that any such claim, cost, loss or damage is attributable to bodily injury, sickness, disease or death, or to injury to or destruction of tangible property (other than the Work itself), including the loss of use resulting there from, but only to the extent caused by any negligent act or omission of the CONTRACTOR, any subcontractor, any Supplier, any person or organization directly or indirectly employed by any of them to perform any of the Work or anyone for whose acts any of them may be liable.

6.20.2. In any and all claims against the OWNER or ENGINEER or any of their respective consultants, agents, officers, directors or employees by any employee (or the survivor or personal representative of such employee) of the CONTRACTOR, any subcontractor, any Supplier, any person or organization directly or indirectly employed by any of them to perform any of the Work, or anyone for whose acts any of them may be liable, the indemnification obligation under applicable portions of Article paragraph 6 shall not be limited in any way by any limitation on the amount or type of damages, compensation or benefits payable by or for the CONTRACTOR or any such subcontractor, Supplier or other person or organization under the workers' compensation acts, disability benefit acts or other employee benefit acts.

6.20.3. The indemnification obligations of the CONTRACTOR under applicable portions of Article 6 shall not extend to the liability of the ENGINEER and ENGINEER's consultants, officers, directors, employees, agents, consultants and subcontractors arising out of:

a. the preparation or approval of, or the failure to prepare or approve, maps, Drawings, opinions, reports, surveys, Change Orders, designs, or Specifications; or

b. giving directions or instructions, or failing to give them, if that is the primary cause of the injury or damage.

U. DELEGATION OF PROFESSIONAL DESIGN SERVICES

6.21.1. The CONTRACTOR will not be required to provide professional design services unless such services are specifically required by the CONTRACT DOCUMENTS for a portion of the Work or unless such services are required to carry out the CONTRACTOR's responsibilities for construction means, methods, techniques, sequences and procedures. The CONTRACTOR shall not be required to provide professional services in violation of applicable law.

6.21.2.. If professional design services or certifications by a design professional related to systems, materials or equipment are specifically required of the CONTRACTOR by the CONTRACT DOCUMENTS, the OWNER and ENGINEER will specify all performance and design criteria that such services must satisfy. The CONTRACTOR shall cause such services or certifications to be provided by a properly licensed professional, whose signature and seal shall appear on all drawings, calculations, specifications, certifications, Shop Drawings and other submittals prepared by such professional. Shop Drawings and other submittals related to the Work designed or certified by such professional, if prepared by others, shall bear such professional's written approval when submitted to the ENGINEER.

6.21.3. The OWNER and ENGINEER shall be entitled to rely upon the adequacy, accuracy and completeness of the services, certifications or approvals performed by such design professionals, provided the OWNER and ENGINEER have specified to the CONTRACTOR all performance and design criteria that such services must satisfy.

6.21.4. Pursuant to this Paragraph 6.21, the ENGINEER's review and acceptance of design calculations and design drawings will be only for the limited purpose of checking for conformance with performance and design criteria given and the design concept expressed in the CONTRACT DOCUMENTS. The ENGINEER's review and acceptance of Shop Drawings and other submittals (except design calculations and design drawings) will be only for the purpose stated in Paragraph 6.17.

6.21.5. The CONTRACTOR shall not be responsible for the adequacy of the performance or design criteria required by the CONTRACT DOCUMENTS.

ARTICLE 7 --- OTHER WORK

A. RELATED WORK AT SITE:

7.01.1 The OWNER may perform other work related to the Project at the Site by the OWNER's own forces, or via other direct contracts therefore which shall contain General Conditions similar to these, or have other work performed by utility owners. If the fact that such other work is to be performed was not noted in the Contract Documents, then:

a. written notice thereof will be given to the CONTRACTOR prior to starting any such other work; and

b. if the OWNER and CONTRACTOR are unable to agree on entitlement to or on the amount or extent, if any, of any adjustment in the Contract Price or Contract Times that should be allowed as a result of such other work, a Claim may be made therefore as provided in Articles 10.

7.01.2. The CONTRACTOR shall afford each other contractor who is a party to such a direct contract, each utility owner and the OWNER, if the OWNER is performing other work with the OWNER's employees, proper and safe access to the Work site, and a reasonable opportunity for the introduction and storage of materials and equipment and the execution of such work, and shall properly coordinate the Work with theirs. Unless otherwise provided in the Contractor Documents, the CONTRACTOR shall do all cutting, fitting and patching of the Work that may be required to properly connect or otherwise make its several parts come together and properly integrate with such other work. The CONTRACTOR shall not endanger any work of others by cutting, excavating or otherwise altering their work and will only cut or alter their work with the written consent of the ENGINEER and the others whose work will be affected. The duties and responsibilities of the CONTRACTOR under this paragraph are for the benefit of such utility owners and other contractors to the extend that there are comparable provisions for the benefit of the CONTRACTOR in said direct contracts between the OWNER and such utility owners and other contractors.

7.01.3. If the proper execution or results of any part of the CONTRACTOR's Work depends upon work performed by others under this Article 7, the CONTRACTOR shall inspect such other work and promptly report to the ENGINEER in writing any delays, defects or deficiencies in such other work that render it unavailable or unsuitable for the proper execution and results of the CONTRACTOR's Work. The CONTRACTORS's failure so to report will constitute an acceptances of such other work as fit and proper for integration with the CONTRACTOR's Work, except for latent or non-apparent defects and deficiencies in such other work.

B. COORDINATION:

7.02.1. If the OWNER intends to contract with others for the performance of other work on the Project at the site, the following will be set forth in the Supplemental General Conditions:

a. the individual or entity who will have authority and responsibility for coordination of the activities among the various prime contractors will be identified;

b. the specific matters to be covered by such authority and responsibility will be itemized; and

c. the extent of such authority and responsibilities will be provided.

7.02.2. Unless otherwise provided in the Supplemental General Conditions, the OWNER shall have sole authority and

responsibility in respect of such coordination.

C. LEGAL RELATIONSHIPS.

7.03.1. Paragraphs 7.A and 7.B are not applicable for utilities not under the control of the OWNER.

7.03.2. Each other direct contract of the OWNER under Paragraph 7.A shall provide that the other contractor is liable to the OWNER and the CONTRACTOR for the reasonable direct delay and disruption cost incurred by the CONTRACTOR as a result of the other contractor's actions or inactions.

7.03.3. The CONTRACTOR shall be liable to the OWNER and any other contractor for the reasonable direct delay and disruption costs incurred by such other contractor as a result of the CONTRACTOR's action or inaction.

ARTICLE 8 — OWNER'S RESPONSIBILITIES.

A. COMMUNICATIONS TO CONTRACTOR

8.01. Except as otherwise provided in these General Conditions, the OWNER shall issue all communications to the CONTRACTOR through the ENGINEER.

B. REPLACEMENT OF ENGINEER

8.02. In case of termination of the employment of the ENGINEER, the OWNER shall appoint an engineer to whom the CONTRACTOR makes no reasonable objection, whose status under the Contract Documents shall be that of the former ENGINEER.

C. FURNISH DATA

8.03. The OWNER shall promptly furnish the data required of the OWNER under the Contract Documents.

D. PAY WHEN DUE

8.04. The OWNER shall make payments to the CONTRACTOR when they are due as provided in Article 14.

E. LANDS AND EASEMENTS; REPORTS AND TESTS

8.05. The OWNER's duties in respect of providing lands and easements and providing engineering surveys to establish reference points are set forth in applicable portions of Article 4. Article 4 refers to the OWNER's identifying and making available to the CONTRACTOR copies of reports of explorations and tests of subsurface conditions at the site and drawings of physical conditions in or relating to existing surface or subsurface structures at or contiguous to the Work site that have been utilized by the ENGINEER in preparing the Contract Documents.

F. INSURANCE

8.06. The OWNER's responsibilities, if any, in respect to purchasing and maintaining liability and property insurance are set forth in Article 5.

G. CHANGE ORDERS

8.07. The OWNER is obligated to execute Change Orders as indicated in Article 10.

H. INSPECTIONS, TESTS, AND APPROVALS

8.08. The OWNER's responsibility in respect of certain inspections, tests and approvals is set forth in Article 13.

I. LIMITATIONS ON OWNER'S RESPONSIBILITIES

8.09 The OWNER shall not supervise, direct or have control or authority over, nor be responsible for, the CONTRACTOR's means, methods, techniques, sequences or procedures of construction or the safety precautions and programs incident thereto, or for any failure of the CONTRACTOR to comply with Laws and Regulations applicable to the furnishing or performance of the Work. The OWNER will not be responsible for the CONTRACTOR's failure to perform or furnish the Work in accordance with the Contract Documents.

J. UNDISCLOSED HAZARDOUS ENVIRONMENTAL CONDITION

8.10. The OWNER's responsibility in respect of undisclosed Hazardous Environmental Condition is set forth is Article 4.

K. EVIDENCE OF FINANCIAL ARRANGEMENTS

8.11. If and to the extent the OWNER has agreed to furnish the CONTRACTOR reasonable evidence that financial arrangements have been made to satisfy the OWNER's obligations under the Contract Documents, the OWNER's responsibility in respect thereof will be as set forth in the Supplemental General Conditions.

ARTICLE 9 — ENGINEER'S STATUS DURING CONSTRUCTION.

A. OWNER'S REPRESENTATIVE:

9.01. The ENGINEER will be the OWNER's representative during the construction period. The duties and responsibilities and the limitations of authority of the ENGINEER, as the OWNER's representative during construction, are set forth in the Contract Documents and will not be changed without written consent of the OWNER and the ENGINEER.

B. VISITS TO SITE:

9.02.1. The ENGINEER will make visits to the Work site at intervals appropriate to the various stages of construction as the ENGINEER deems necessary in order to observe as an experienced and qualified design professional the progress that has been made and the quality of the various aspects of the CONTRACTOR's executed Work. Based on information obtained during such visits and observations, the ENGINEER, for the benefit of the OWNER, will determine, in general, if the Work is proceeding in accordance with the Contract Documents. The ENGINEER will not be required to make exhaustive or continuous inspections on the Work site to check the quality or quantity of the Work. The ENGINEER's efforts will be directed toward providing for the OWNER a greater degree of confidence that the completed Work will conform generally to the Contract Documents. On the basis of such visits and on-site observations, the ENGINEER will keep the OWNER informed of the progress of the Work and will endeavor to guard the OWNER against defective Work.

9.02.2. The ENGINEER's visits and on-site observations are subject to all the limitations on the ENGINEER's authority and responsibility set forth in paragraph 9.B.09. Particularly, but without limitation, during or as a result of the ENGINEER's on-site visits or observations of the CONTRACTOR's Work, the ENGINEER will not supervise, direct, control or have authority over or be responsible for the CONTRACTOR's means, methods, techniques, sequences or procedures of construction, or the safety precautions and programs incident thereto, or for any failure of the CONTRACTOR to comply with Laws and Regulations applicable to the furnishing or performance of the Work.

C. PROJECT REPRESENTATION:

9.03. If the OWNER and ENGINEER agree, the ENGINEER will furnish a Resident Project Representative to assist the ENGINEER in providing more continuous observation of the Work. The authority and responsibilities of any such Resident Project Representative and assistants will be as provided in the Supplemental General Conditions, and limitations on the responsibilities thereof will be as provided in Paragraph 9.B.09. If the OWNER designates another representative or agent to represent the OWNER at the Work site who is not the ENGINEER's Consultant, agent or employee, the responsibilities and limitations thereon of such other individual or entity will be as provided in the Supplemental General Conditions.

D. AUTHORIZED VARIATIONS IN WORK:

9.04. The ENGINEER may authorize minor variations in the Work from the requirements of the Contract Documents which do not involve an adjustment in the Contract Price or the Contract Time and are compatible with the design concept of the completed Project as a functioning whole as indicated by the Contract Documents. These may be accomplished by a Field Order and will be binding on the OWNER and also on the CONTRACTOR who shall perform the Work involved promptly. If the OWNER or the CONTRACTOR believes that a Field Order justifies an adjustment in the Contract Price or Contract Time, or both, and the parties

are unable to agree on entitlement to or on the amount or extent, if any, of such adjustment, the OWNER or CONTRACTOR may make a Claim therefore as provided in Article 10.

E. REJECTING DEFECTIVE WORK:

9.05. The ENGINEER will have authority to disapprove or reject Work which the ENGINEER believes to be defective, or that the ENGINEER believes will not produce a completed Project that conforms to the Contract Documents or that will prejudice the integrity of the design concept of the completed Project as a functioning whole as indicated by the Contract Documents. The ENGINEER will also have authority to require special inspection or testing of the Work as provided in Article 13, whether or not the Work is fabricated, installed or completed.

F. SHOP DRAWINGS, CHANGE ORDERS AND PAYMENTS:

9.06.1. In connection with the ENGINEER's authority, and limitations thereof, as to Shop Drawings and Samples, see Article 6.

9.06.2. In connection with the ENGINEER's authority, and limitations thereof, as to design calculations and design drawings submitted in response to a delegation of professional design services, if any, see applicable paragraphs of Article 6.

9.06.3.. In connection with the ENGINEER's authority as to Change Orders, see Articles 10, 11 and 12.

9.06.4. In connection with the ENGINEER's authority as to Applications for Payment, see Article 14.

G. DETERMINATIONS FOR UNIT PRICE WORK:

9.07. The ENGINEER will determine the actual quantities and classifications of Unit Price Work performed by the CONTRACTOR. The ENGINEER will review with the CONTRACTOR the ENGINEER's preliminary determinations on such matters before rendering a written decision thereon (by recommendation of an Application for Payment or otherwise). The ENGINEER's written decisions thereon will be final and binding (except as modified by the ENGINEER to reflect changed factual conditions or more accurate data) upon the OWNER and CONTRACTOR, subject to the provisions of Article 10.

H. DECISIONS ON REQUIREMENTS OF CONTRACT DOCUMENTS AND ACCEPTABILITY OF WORK:

9.08.1. The ENGINEER will be the initial interpreter of the requirements of the Contract Documents and judge of the acceptability of the Work there under. All matters in question and other matters between the OWNER and CONTRACTOR arising prior to the date of final payment is due relating to the acceptability of the Work, and the interpretation of the requirements of the CONTRACT DOCUMENTS pertaining to the performance of the Work, will be referred initially to the ENGINEER in writing within 30 days of the event giving rise to the question.

9.08.2. The ENGINEER will, with reasonable promptness, render a written decision on the issue referred. If the OWNER or CONTRACTOR believe that any such decision entitles them to an adjustment in the Contract Price or Contract Time, or both, a Claim may be made under the applicable portion of Article 10. The date of the ENGINEER's decision shall be the date of the event giving rise to the issues referenced for the purposes of Article 10.

9.08.3 The ENGINEER's written decision on the issue referred will be final and binding upon the OWNER and CONTRACTOR, subject to the provisions of Article 10.

9.08.4. When functioning as interpreter and judge under this paragraphs 9.08, the ENGINEER will not show partiality to the OWNER or CONTRACTOR and will not be liable in connection with any interpretation or decision rendered in good faith in such capacity.

I. LIMITATIONS ON ENGINEER'S AUTHORITY AND RESPONSIBILITIES:

9.09.1. Neither the ENGINEER's authority or responsibility under this Article 9 or under any other provision of the Contract Documents nor any decision made by the ENGINEER in good faith either to exercise or not exercise such authority or responsibility or the undertaking, exercise or performance of any authority or responsibility of the ENGINEER shall create, impose or give rise to any duty owed by the ENGINEER to the CONTRACTOR, any Subcontractor, any Supplier, any other individual or entity, or to any surety for or employee or agent of any of them.

9.09.2. The ENGINEER will not supervise, direct, control or have authority over or be responsible for the CONTRACTOR's means, methods, techniques, sequences or procedures of construction, or the safety precautions and programs incident thereto, or for any failure of the CONTRACTOR to comply with Laws and Regulations applicable to the furnishing or performance of the Work. The ENGINEER will not be responsible for the CONTRACTOR's failure to perform or furnish the Work in accordance with the Contract Documents.

9.09.3. The ENGINEER will not be responsible for the acts or omissions of the CONTRACTOR or of any Subcontractor, any Supplier, or of any other individual or entity performing or furnishing any of the Work.

9.09.4. The ENGINEER's review of the final Application for Payment any accompanying documentation and all maintenance and operation instructions, schedules , guarantees, bonds and certificates of inspection, tests and approvals and other documentation required to be delivered by Article 14 will only be to determine generally that their content complies with the requirements of, and in the case of certificates of inspections, tests and approvals that the results certified indicate compliance with, the Contract Documents.

9.09.5. The limitations upon authority and responsibility set forth in this paragraph 9.09 shall also apply to the ENGINEER's Consultants, Resident Project Representative, and assistants, if any.

ARTICLE 10 --- CHANGES IN THE WORK; CLAIMS

A. AUTHORIZED CHANGES IN THE WORK

10.01.1. Without invalidating the Contract and without notice to any surety, the OWNER may, at any time or from time to time, order additions, deletions or revisions in the Work by a Change Order, or a Work Change Directive. Upon receipt of any such document, the CONTRACTOR shall promptly proceed with the Work involved which will be performed under the applicable conditions of the Contract Documents (except as otherwise specifically provided).

10.01.2. If the OWNER and CONTRACTOR are unable to agree on entitlement to, or on the amount or extent, if any, of an adjustment in the Contract Price or Contract Times, or both, that should be allowed as a result of Work Change Directive, a claim may be made therefore as provided in this Article 10.

B. UNAUTHORIZED CHANGES IN THE WORK

10.02. The CONTRACTOR shall not be entitled to an increase in the Contract Price or an extension of the Contract Times with respect to any Work performed that is not required by the Contract Documents as amended, modified and supplemented as provided in Article 3, except in the case of an emergency as provided in Article 6 or in the case of uncovering Work as provided in Article 13.

C. EXECUTION OF CHANGE ORDERS

10.03.1. The OWNER and CONTRACTOR shall execute appropriate Change Orders recommended by the ENGINEER covering:

a. changes in the Work, which are: (i) ordered by the OWNER pursuant to paragraph 10.A; (ii) required because of acceptance of defective Work under Article 13 or the OWNER's correcting defective Work under Article 13; or (iii) agreed to by the parties;

b. changes in the Contract Price or Contract Times which are agreed to by the parties, including any undisputed sum or amount of time for Work actually performed in accordance with a Work Change Directive; and

c. changes in the Contract Price or Contract Times which embody the substance of any written decision rendered by the ENGINEER pursuant to applicable portion of Paragraph 10.E; provided that, in lieu of executing any such Change Order, an appeal may be taken from any such decision in accordance with the provisions of the Contract Documents and applicable Laws and Regulations, but during any such appeal, the CONTRACTOR shall carry on the Work and adhere to the Progress Schedule as provided in Article 6.

D. NOTIFICATION TO SURETY

10.04. If notice of any change affecting the general scope of the Work or the provisions of the Contract Documents (including,

but not limited to, Contract Price or Contract Times) is required by the provisions of any Bond to be given to a surety, the giving of any such notice will be the CONTRACTOR's responsibility. The amount of each applicable Bond will be adjusted to reflect the effect of any such change.

E. CLAIMS

10.05.1. ENGINEER's Decision Required: All Claims, except those waived pursuant to Article 14, shall be referred to the ENGINEER for decision. A decision by the ENGINEER shall be required as a condition precedent to any exercise by OWNER or CONTRACTOR of any rights or remedies either may otherwise have under the Contract Documents or by Laws and Regulations in respect of such Claims.

10.05.2. Notice: Written notice stating the general nature of each Claim, shall be delivered by the claimant to the ENGINEER and the other party to the Contract promptly (but in no event later than 30 days) after the start of the event giving rise thereto. The responsibility to substantiate a Claim shall rest with the party making the Claim. Notice of the amount or extent of the Claim, with supporting data shall be delivered to the ENGINEER and the other party to the Contract within 60 days after the start of such event (unless the ENGINEER allows additional time for claimant to submit additional or more accurate data in support of such Claim). A Claim for an adjustment in Contract Price shall be prepared in accordance with the provisions of Article 12. A Claim for an adjustment in Contract Time shall be prepared in accordance with the provisions of Article 12. Each Claim shall be accompanied by the claimant's written statement that the adjustment claimed is the entire adjustment to which the claimant believes it is entitled as a result of said event. The opposing party shall submit any response to the ENGINEER and the claimant within 30 days after receipt of the claimant's last submittal (unless the ENGINEER allows additional time).

10.05.3. ENGINNEER'S Action: The ENGINEER will review each Claim and, within 30 days after receipt of the last submittal of the claimant or the last submittal of the opposing party, if any, take one of the following actions in writing:

a. deny the Claim in whole or in part,

b. approve the Claim, or

c. notify the parties that the ENGINEER is unable to resolve the Claim if, in the ENGINEER's sole discretion, it would be inappropriate for the ENGINEER to do so. For purposes of further resolution of the Claim, such notice shall be deemed a denial.

10.05.3. In the event that ENGINEER does not take action on a Claim within said 30 days, the Claim shall be deemed denied.

10.05.4. The ENGINEER's written actions or denial pursuant to this Paragraph 10.05 will be final and binding upon the OWNER and CONTRACTOR, unless the OWNER or CONTRACTOR invoke the dispute resolution procedure set forth in Article 16 within 30 days of such action or denial.

10.05.5 No Claim for an adjustment in Contract Price or Contract Times will be valid if not submitted in accordance with this Paragraph 10.05.

ARTICLE 11 --- COST OF THE WORK; ALLOWANCES; UNIT PRICE WORK

A. COST OF THE WORK

11.01.1 Costs Included: The term Cost of the Work means the sum of all costs, except those excluded in Paragraph 11.01.2, necessarily incurred and paid by the CONTRACTOR in the proper performance of the Work. When the value of any Work covered by a Change Order or when a Claim for an adjustment in Contract Price is determined on the basis of Cost of the Work, the costs to be reimbursed to the CONTRACTOR will be only those additional or incremental costs required because of the change in the Work or because of the event giving rise to the Claim. Except as otherwise may be agreed to in writing by the OWNER, such costs shall be in amounts no higher than those prevailing in the locality of the Project, shall include only the following items, and shall not include any of the costs itemized in Paragraph 11.01.2.

a. Payroll costs for employees in the direct employ of the CONTRACTOR in the performance of the Work under schedules of job classifications agreed upon by the OWNER and CONTRACTOR. Such employees shall include, without limitation, superintendents, foremen, and other personnel employed full time at the Work Site. Payroll costs for employees not employed full time on the Work shall be apportioned on the basis of their time spent on the Work. Payroll costs shall include, but not be limited to, salaries and wages plus the cost of fringe benefits, which shall include social security contributions, unemployment, excise, and payroll taxes, workers' compensation, health and retirement benefits, bonuses, sick leave, vacation and holiday pay applicable

thereto. The expenses of performing Work outside of regular working hours, on Saturday, Sunday, or legal holidays, shall be included in the above to the extent authorized by the OWNER.

b. Cost of all materials and equipment furnished and incorporated in the Work, including costs of transportation and storage thereof, and Suppliers' field services required in connection therewith. All cash discounts shall accrue to the CONTRACTOR unless the OWNER deposits funds with the CONTRACTOR with which to make payments, in which case the cash discounts shall accrue to the OWNER. All trade discounts, rebates and refunds and returns from sale of surplus materials and equipment shall accrue to Owner, and Contractor shall make provisions so that they may be obtained.

c. Payments made by the CONTRACTOR to Subcontractors for Work performed by Subcontractors. If required by the OWNER, the CONTRACTOR shall obtain competitive bids from subcontractors acceptable to the OWNER and CONTRACTOR and shall deliver such bids to the OWNER, who will then determine, with the advice of the ENGINEER, which bids, if any, will be acceptable. If any subcontract provides that the Subcontractor is to be paid on the basis of Cost of the Work plus a fee, the Subcontractor's Cost of the Work and fee shall be determined in the same manner as Contractor's Cost of the Work and fee as provided in this Article 11.

d. Costs of special consultants (including but not limited to Engineers, architects, testing laboratories, surveyors, attorneys, and accountants) employed for services specifically related to the Work.

e. Supplemental costs including the following:

(1) The proportion of necessary transportation, travel, and subsistence expenses of Contractor's employees incurred in discharge of duties connected with the Work.

(2) Cost, including transportation and maintenance, of all materials, supplies, equipment, machinery, appliances, office, and temporary facilities at the Work Site, and hand tools not owned by the workers, which are consumed in the performance of the Work, and cost, less market value, of such items used but not consumed which remain the property of the CONTRACTOR.

(3) Rentals of all construction equipment and machinery, and the parts thereof whether rented from the CONTRACTOR or others in accordance with rental agreements approved by the OWNER with the advice of the ENGINEER, and the costs of transportation, loading, unloading, assembly, dismantling, and removal thereof. All such costs shall be in accordance with the terms of said rental agreements. The rental of any such equipment, machinery, or parts shall cease when the use thereof is no longer necessary for the Work.

(4) Sales, consumer, use, and other similar taxes related to the Work, and for which the CONTRACTOR is liable, imposed by Laws and Regulations.

(5) Deposits lost for causes other than negligence of the CONTRACTOR, any Subcontractor, or anyone directly or indirectly employed by any of them or for whose acts any of them may be liable, and royalty payments and fees for permits and licenses.

(6) Losses and damages (and related expenses) caused by damage to the Work, not compensated by insurance or otherwise, sustained by the CONTRACTOR in connection with the performance of the Work (except losses and damages within the deductible amounts of property insurance established in accordance with applicable portions of Article 5), provided such losses and damages have resulted from causes other than the negligence of the CONTRACTOR, any Subcontractor, or anyone directly or indirectly employed by any of them or for whose acts any of them may be liable. Such losses shall include settlements made with the written consent and approval of the OWNER. No such losses, damages, and expenses shall be included in the Cost of the Work for the purpose of determining CONTRACTOR's fee.

(7) The cost of utilities, fuel, and sanitary facilities at the Work Site.

(8) Minor expenses such as telegrams, long distance telephone calls, telephone service at the Work Site, expresses, and similar petty cash items in connection with the Work.

(9) The costs of premiums for all bonds and insurance the CONTRACTOR is required by the CONTRACT DOCUMENTS to purchase and maintain.

11.01.2. Costs Excluded: The term Cost of the Work shall not include any of the following items:

a. Payroll costs and other compensation of the CONTRACTOR's officers, executives, principals (of partnerships and sole proprietorships), general managers, safety managers, engineers, architects, estimators, attorneys, auditors, accountants, purchasing and contracting agents, expediters, timekeepers, clerks, and other personnel employed by the CONTRACTOR, whether at the Work Site or in the CONTRACTOR's principal or branch office for general administration of the Work and not specifically included in the agreed upon schedule of job classifications referred to or specifically covered by applicable portions of Article 11, all of which are to be considered administrative costs covered by the CONTRACTOR's fee.

b. Expenses of the CONTRACTOR's principal and branch offices other than the CONTRACTOR's office at the Work Site.

c. Any part of the CONTRACTOR's capital expenses, including interest on the CONTRACTOR's capital employed for the Work and charges against the CONTRACTOR for delinquent payments.

d. Costs due to the negligence of the CONTRACTOR, any Subcontractor, or anyone directly or indirectly employed by any of them or for whose acts any of them may be liable, including but not limited to, the correction of defective Work, disposal of

materials or equipment wrongly supplied, and making good any damage to property.

e. Other overhead or general expense costs of any kind and the costs of any item not specifically and expressly included in applicable portions of Article 11.

11.01.3. CONTRACTOR's Fee: When all the Work is performed on the basis of cost-plus, the CONTRACTOR's fee shall be determined as set forth in the Agreement. When the value of any Work covered by a Change Order or when a Claim for an adjustment in Contract Price is determined on the basis of Cost of the Work, the CONTRACTOR's fee shall be determined as set forth in applicable portions of Article 12.

11.01.4. Documentation: Whenever the Cost of the Work for any purpose is to be determined pursuant to Paragraphs 11.01.1 and 11.01.2, the CONTRACTOR will establish and maintain records thereof in accordance with generally accepted accounting practices and submit in a form acceptable to the ENGINEER an itemized cost breakdown together with supporting data.

B. ALLOWANCES

11.02.1. It is understood that the CONTRACTOR has included in the Contract Price all allowances so named in the Contract Documents and shall cause the Work so covered to be performed for such sums and by such persons or entities as may be acceptable to the OWNER and ENGINEER.

11.02.2. Cash Allowances

a. The CONTRACTOR agrees that:
(1) the cash allowances include the cost to the CONTRACTOR (less any applicable trade discounts) of materials and equipment required by the allowances to be delivered at the Work Site, and all applicable taxes; and
(2) the CONTRACTOR's costs for unloading and handling on the Work Site, labor, installation , overhead, profit, and other expenses contemplated for the cash allowances have been included in the Contract Price and not in the allowances, and no demand for additional payment on account of any of the foregoing will be valid.

11.02.3. Contingency Allowance

a. The CONTRACTOR agrees that a contingency allowance, if any, is for the sole use of the OWNER to cover unanticipated costs.

11.02.4. Prior to final payment, an appropriate Change Order will be issued as recommended by the ENGINEER to reflect actual amounts due the CONTRACTOR on account of the Work covered by allowances, and the Contract Price shall be correspondingly adjusted.

C. UNIT PRICE WORK

11.03.1. Where the Contract Documents provide that all or part of the Work is to be Unit Price Work, initially the Contract Price will be deemed to include for all Unit Price Work an amount equal to the sum of the unit price for each separately identified item of Unit Price Work times the estimated quantity of each item as indicated in the Agreement.

11.03.2. The estimated quantities of items of Unit Price Work are not guaranteed and are solely for the purpose of comparison of Bids and determining an initial Contract Price. Determinations of the actual quantities and classifications of Unit Price Work performed by the CONTRACTOR will be made by the ENGINEER subject to the provisions of Article 9.

11.03.3. Each unit price will be deemed to include an amount considered by the CONTRACTOR to be adequate to cover the CONTRACTOR's overhead and profit for each separately identified item.

11.03.4. The OWNER or CONTRACTOR may make a Claim for an adjustment in the Contract Price in accordance with applicable portions of Article 10 if:

a. the quantity of any item of Unit Price Work performed by the CONTRACTOR differs materially and significantly from the estimated quantity of such item indicated in the Agreement; and

b. there is no corresponding adjustment with respect any other item of Work; and

c. the CONTRACTOR believes that the CONTRACTOR is entitled to an increase in Contract Price as a result of having incurred additional expense or the OWNER believes that the OWNER is entitled to a decrease in Contract Price and the parties are unable to agree as to the amount of any such increase or decrease.

ARTICLE 12 --- CHANGE OF CONTRACT PRICE

A. CHANGE OF CONTRACT PRICE:

12.01.1. The Contract Price may only be changed by a Change Order. Any claim for an adjustment in the Contract Price shall be based on a written notice submitted by the party making the claim to the ENGINEER and the other party to the Contract in accordance with the provisions of Article 10.

12.01.2. The value of any Work covered by a Change Order or of any claim for an adjustment in the Contract Price will be determined as follows:

a. Where the Work involved is covered by unit prices contained in the Contract Documents, by application of such unit prices to the quantities of the items involved (subject to the provisions of applicable portions of Article11); or

b. Where the Work involved is not covered by unit prices contained in the Contract Documents, by mutually agreed lump sum (which may include an allowance for overhead and profit not necessarily in accordance with Paragraph 12.01.3).

c. Where the Work involved is not covered by unit prices contained in the Contract Documents and agreement to a lump sum is not reached under this paragraph 12.01.2, on the basis of the Cost of the Work (determined as provided in applicable portion of Article 11) plus a CONTRACTOR's fee for overhead and profit (determined as provided in paragraphs 12.01.3).

12.01.3. CONTRACTOR's Fee: The CONTRACTOR's fee for overhead and profit shall be determined as follows:

a. a mutually acceptable fixed fee; or

b. if a fixed fee is not agreed upon, then a fee based on the following percentages of the various portions of the Cost of the Work:

(1) for costs incurred under Paragraphs 11.01.1.a and 11.01.1.b, the CONTRACTOR's fee shall be 15 percent;
(2) for costs incurred under Paragraph 11.01.1.c, the CONTRACTOR's fee shall be five percent;
(3) where one or more tiers of subcontractors are on the basis of Cost of the Work plus a fee and no fixed fee is agreed upon, the intent of Paragraph 12.01.3.b.(1) is that the Subcontractor who actually performs the Work, at whatever tier, will be paid a fee a 15 percent of the costs incurred by such Subcontractor under Paragraph 11.01.1.a and 11.01.1.b and that any higher tier Subcontractor and CONTRACTOR will each be paid a fee of five percent of the amount paid to the next lower tier Subcontractor;
(4) no fee shall be payable on the basis of costs itemized under Paragraphs 11.01.1.d, 11.01.1.e and 11.01.2;
(5) the amount of credit to be allowed by the CONTRACTOR to the OWNER for any change which results in a net decrease in cost will be the amount of the actual net decrease in cost plus a deduction in the CONTRACTOR's fee by an amount equal to five percent of such net decrease; and
(6) when both additions and credits are involved in any one change, the adjustment in the CONTRACTOR's fee shall be computed on the basis of the net change in accordance with Paragraphs 12.01.3.b.(1) through 12.01.3.b.(5), inclusive.

B. CHANGE OF CONTRACT TIMES

12.02.1. The Contract Times may only be changed by a Change Order. Any Claim for an adjustment in the Contract Times shall be based on written notice submitted by the party making the Claim to the ENGINEER and the other party to the Contract in accordance with the provisions of Paragraph 10.E.

12.02.2. Any adjustment of the Contract Times covered by a Change Order or any Claim for an adjustment in the Contract Times will be determined in accordance with the provisions of this Article 12.

C. DELAYS

12.03.1. Where the CONTRACTOR is prevented from completing any part of the Work within the Contract Times due to delay beyond the control of the CONTRACTOR, the Contract Times will be extended in an amount equal to the time lost due to such delay if a claim is made therefore as provided in paragraph 12.02.1. Delays beyond the control of the CONTRACTOR shall include, but not be limited to, acts or neglect by the OWNER, acts or neglect of utility owners or other contractors performing other work as contemplated by Article 7, fires, floods, epidemics, abnormal weather conditions or acts of God.

12.03.2. If the OWNER, ENGINEER, or other contractors or utility owners performing other work for the OWNER as contemplated by Article 7, or anyone for whom the OWNER is responsible, delays, disrupts, or interferes with the performance or progress of the Work, then the CONTRACTOR shall be entitled to an equitable adjustment in the Contract Price or the Contract Times, or both, the CONTRACTOR's entitlement to an adjustment of the Contract Times is conditioned on such adjustment being essential to the CONTRACTOR's ability to complete the Work within the Contract Times.

12.03.3. If the CONTRACTOR is delayed in the performance or progress of the Work by fire, flood, epidemic, abnormal weather conditions, acts of God, acts or failures to act of utility owners not under the control of the OWNER, or other causes not the

fault of and beyond control of the OWNER and CONTRACTOR, then the CONTRACTOR shall be entitled to an equitable adjustment in Contract Times, if such adjustment is essential to the CONTRACTOR's ability to complete the Work within the Contract Times. Such an adjustment shall be the CONTRACTOR's sole and exclusive remedy for the delays described in this paragraph 12.03.3.

12.03.4. The OWNER, ENGINEER and the related entities of each of them shall not be liable to the CONTRACTOR for any claims, costs, losses, or damages (including but not limited to all fees and charges of engineers, attorneys, and other professionals and all court or arbitration or other dispute resolution costs) sustained by the CONTRACTOR on or in connection with any other project or anticipated project.

12.03.5. The CONTRACTOR shall not be entitled to an adjustment in Contract Price or Contract Times for delays within the control of the CONTRACTOR. Delays attributable to and within the control of a Subcontractor or Supplier shall be deemed to be delays within the control of the CONTRACTOR.

ARTICLE 13 --- TESTS AND INSPECTIONS; CORRECTION, REMOVAL OR ACCEPTANCE OF DEFECTIVE WORK

A. NOTICE OF DEFECTS:

13.01. Prompt notice of all defective Work of which the OWNER or ENGINEER have actual knowledge will be given to the CONTRACTOR. All defective Work may be rejected, corrected or accepted as provided in this Article 13.

B. ACCESS TO WORK:

13.02. The OWNER, ENGINEER, ENGINEER's Consultants, other representatives and personnel of the OWNER, independent testing laboratories and governmental agencies with jurisdictional interests will have access to the Work site and the Work at reasonable times for their observation, inspecting and testing. The CONTRACTOR shall provide them proper and safe conditions for such access and advise them of the CONTRACTOR's site safety procedures and programs so that they may comply therewith as applicable.

C. TESTS AND INSPECTIONS:

13.03.1. The CONTRACTOR shall give the ENGINEER timely notice of readiness of the Work for all required inspections, tests or approvals, and shall cooperate with inspection and testing personnel to facilitate required inspections or tests.

13.03.2. The OWNER shall employ and pay for the services of an independent testing laboratory to perform all inspections, tests or approvals required by the Contract Documents except:

a. for inspections, tests or approvals covered by paragraph 13.03.3 and 13.03.4 below;

b. that costs incurred in connection with tests or inspections conducted pursuant to paragraph 13.04.2 shall be paid as provided in said paragraph 13.04.3; and

c. as otherwise specifically provided in the Contract Documents.

13.03.3. If Laws and Regulations of any public body having jurisdiction require any Work (or part thereof) specifically to be inspected, tested or approved by an employee or other representative of such public body, the CONTRACTOR shall assume full responsibility for arranging and obtaining such inspections, tests or approvals, pay all costs in connection therewith, and furnish the ENGINEER the required certificates of inspection, or approval.

13.03.4. The CONTRACTOR shall be responsible for arranging and obtaining and shall pay all costs in connections with any inspections, tests or approval required in connection with the OWNER's or ENGINEER's acceptance of materials or equipment to be incorporated in the Work; or acceptance of materials, mix designs, or equipment submitted for approval prior to the CONTRACTOR's purchase thereof for incorporation in the Work. Such inspections, tests, or approvals shall be performed by organizations acceptable to the OWNER and ENGINEER.

13.03.5. If any Work (or the work of others) that is to be inspected, tested or approved is covered by the CONTRACTOR without written concurrence of the ENGINEER, it must, if requested by the ENGINEER, be uncovered for observation.

13.03.6. Uncovering Work as provided in paragraph 13.03.5 shall be at the CONTRACTOR's expense, unless the CONTRACTOR has given the ENGINEER timely notice of the CONTRACTOR's intention to cover the same and the ENGINEER has not acted with reasonable promptness in response to such notice.

D. UNCOVERING WORK:

13.04.1. If any Work is covered contrary to the written request of the ENGINEER, it must, if requested by the ENGINEER,

be uncovered for the ENGINEER's observation and replaced at the CONTRACTOR's expense.

13.04.2. If the ENGINEER considers it necessary or advisable that covered Work be observed by the ENGINEER or inspected or tested by others, the CONTRACTOR, at the ENGINEER's request, shall uncover, expose or otherwise make available for observation, inspection or testing as the ENGINEER may require, that portion of the Work in question, furnishing all necessary labor, material and equipment.

13.04.3. If it is found that uncovered Work is defective, the CONTRACTOR shall pay all claims, costs, losses and damages (including but not limited to all fees and charges of engineers, attorneys, and other professional and all court or arbitration or other dispute resolution costs) arising out of or relating to such uncovering, exposure, observation, inspection and testing and of satisfactory replacement or reconstruction, (including but not limited to all costs of repair or replacement of work of others); and the OWNER shall be entitled to an appropriate decrease in the Contract Price. If the parties are unable to agree as to the amount thereof, the OWNER may make a claim therefore as provided in Article 10.

13.04.4. If, the uncovered Work is not found to be defective, the CONTRACTOR shall be allowed an increase in the Contact Price or an extension of Contract Times, or both, directly attributable to such uncovering, exposure, observation, inspection, testing, replacement, and reconstruction. If the parties are unable to agree as to the amount or extent thereof, the CONTRACTOR may make a claim therefore as provided in Article 10.

E. OWNER MAY STOP THE WORK:

13.05. If the Work is defective, or the CONTRACTOR fails to supply sufficient skilled workers or suitable materials or equipment, or fails to furnish or perform the Work in such a way that the completed Work will conform to the Contract Documents, the OWNER may order the CONTRACTOR to stop the Work, or any portion thereof, until the cause for such order has been eliminated; however, this right of the OWNER to stop the Work shall not give rise to any duty on the part of the OWNER to exercise this right for the benefit of the CONTRACTOR, any Subcontractor, any Supplier, any other individual or entity, or any surety for, or employee or agent of any of them.

F. CORRECTION OR REMOVAL OF DEFECTIVE WORK:

13.06.1. Promptly after receipt of notice, the CONTRACTOR shall correct all defective Work, whether or not fabricated, installed or completed, or, if the Work has been rejected by the ENGINEER, remove it from the Project and replace it with Work that is not defective. The CONTRACTOR shall pay all claims, costs, losses and damages (including but not limited to all fees and charges of engineers, attorneys and other professionals and all court or arbitration or other dispute resolution costs) arising out of or relating to such correction or removal (including but not limited to all costs of repair or replacement of work of others).

13.06.2. When correcting defective Work under the terms of this Paragraph 13.06 or Paragraph 13.07, the CONTRACTOR shall take no action that would void or otherwise impair the OWNER's special warranty and guarantee, if any, on said Work.

G. CORRECTION PERIOD:

13.07.1. If within one year after the date of Substantial Completion (or such longer period of time as may be prescribed by the terms of any applicable special guarantee required by the Contract Documents) or by any specific provision of the Contract Documents, any Work is found to be defective, or if the repair of any damages to the land or areas made available for the CONTRACTOR's use by the OWNER or permitted by Laws and Regulations as contemplated in applicable portions of Article 6 is found to be defective, the CONTRACTOR shall promptly, without cost to the OWNER and in accordance with the OWNER's written instructions:

a. repair such defective land or areas; or

b. correct such defective Work; or

c. if the defective Work has been rejected by the OWNER, remove it from the Project and replace it with Work that is not defective; and

d. satisfactorily correct or remove and replace any damage to other Work, to the work of others or other land or areas resulting there from.

13.07.2. If the CONTRACTOR does not promptly comply with the terms of the OWNER's written instructions, or in an emergency where delay would cause serious risk of loss or damage, the OWNER may have the defective Work corrected or repaired or may have the rejected Work removed and replaced. All claims, costs, losses and damages (including but not limited to all fees and charges of engineers, attorneys, and other professional and all court or arbitration or other dispute resolution costs)

arising out of or relating to such correction or repair or such removal and replacement (including but not limited to all costs of repair or replacement of work of others) will be paid by the CONTRACTOR.

13.07.3. In special circumstances, where a particular item of equipment is placed in continuous service before Substantial Completion of all the Work, the correction period for that item may start to run from an earlier date if so provided in the Specifications.

13.07.4. Where defective Work (and damage to other Work resulting there from) has been corrected or removed and replaced under this paragraph 13.07, the correction period hereunder with respect to such Work will be extended for an additional period of one year after such correction or removal and replacement has been satisfactorily completed.

13.07.5. The CONTRACTOR's obligations under this Paragraph 13.07 are in addition to any other obligation or warranty. The provisions of this Paragraph 13.07 shall not be construed as a substitute for or a waiver of the provisions of any applicable statute of limitation or repose.

H. ACCEPTANCE OF DEFECTIVE WORK:

13.08. If, instead of requiring correction or removal and replacement of defective Work, the OWNER (and, prior to the ENGINEER's recommendation of final payment, the ENGINEER) prefers to accept it, the OWNER may do so. The CONTRACTOR shall pay all claims, costs, losses and damages (including but not limited to all fees and charges of engineers, attorneys, and other professionals and all court or arbitration or other dispute resolution costs) attributable to the OWNER's evaluation of and determination to accept such defective Work (such costs to be approved by the ENGINEER as to reasonableness) and the diminished value of the Work to the extent not otherwise paid by the CONTRACTOR pursuant to this sentence. If any such acceptance occurs prior to the ENGINEER's recommendation of final payment, a Change Order will be issued incorporating the necessary revisions in the Contract Documents with respect to the Work; and the OWNER shall be entitled to an appropriate decrease in the Contract Price, reflecting the diminished value of Work so accepted. If the parties are unable to agree as to the amount thereof, the OWNER may make a claim therefore as provided in Article 10. If the acceptance occurs after such a recommendation, an appropriate amount will be paid by the CONTRACTOR to the OWNER.

I. OWNER MAY CORRECT DEFECTIVE WORK:

13.09.1. If the CONTRACTOR fails, within a reasonable time after written notice from the ENGINEER to correct defective Work or to remove and replace rejected Work as required by the ENGINEER in accordance with paragraph 13.06.1, or if the CONTRACTOR fails to perform the Work in accordance with the Contract Documents, or if the CONTRACTOR fails to comply with any other provision of the Contract Documents, the OWNER may, after seven days written notice to the CONTRACTOR, correct and remedy any such deficiency.

13.09.2. In exercising the rights and remedies under this Paragraph 13.09, the OWNER shall proceed expeditiously. In connection with such corrective and remedial action, the OWNER may exclude the CONTRACTOR from all or part of the Work site and suspend the CONTRACTOR's services related thereto, take possession of the CONTRACTOR's tools, appliances, construction equipment and machinery at the Work site, and incorporate in the Work all materials and equipment stored at the Work site or for which the OWNER has paid the CONTRACTOR but which are stored elsewhere. The CONTRACTOR shall allow the OWNER, the OWNER's representatives, agents and employees, OWNER's other contractors and the ENGINEER and ENGINEER's Consultants access to the Work site to enable the OWNER to exercise the rights and remedies under this Paragraph.

13.09.3 All claims, costs, losses and damages (including but not limited to all fees and charges of engineers, attorneys, and other professionals and all court or arbitration or other dispute resolution costs) incurred or sustained by the OWNER in exercising such rights and remedies under this Paragraph 13.09 will be charged against the CONTRACTOR, and a Change Order will be issued incorporating the necessary revisions in the Contract Documents with respect to the Work; and the OWNER shall be entitled to an appropriate decrease in the Contract Price. If the parties are unable to agree as to the amount of the adjustment, the OWNER may make a claim therefore as provided in Article 10. Such claims, costs, losses and damages will include but not be limited to all costs of repair, or replacement of work of others destroyed or damaged by corrections, removal or replacement of the CONTRACTOR's defective Work.

13.09.4. The CONTRACT shall not be allowed an extension of the Contract Times because of any delay in performance of the Work attributable to the exercise by the OWNER of the OWNER's rights and remedies under this Paragraph 13.09.

ARTICLE 14 --- PAYMENTS TO CONTRACTOR AND COMPLETION

A. SCHEDULE OF VALUES:

14.01. The Schedule of values established as provided in Article 2 will serve as the basis for progress payments and will be incorporated into a form of Application for Payment acceptable to the ENGINEER. Progress payments on account of Unit Price

Work will be based on the number of units completed.

B. PROGRESS PAYMENT:

14.02.1. Applications for Payments.

a. At least 20 days before the date established in the Agreement for each progress payment (but not more often than once a month), the CONTRACTOR shall submit to the ENGINEER for review an Application for Payment filled out and signed by the CONTRACTOR covering the Work completed as of the date of the Application and accompanied by such supporting documentation as is required by the Contract Documents. If payment is requested on the basis of materials and equipment not incorporated in the Work but delivered and suitably stored at the Work site or at another location agreed to in writing, the Application for Payment shall also be accompanied by a bill of sale, invoice or other documentation warranting that the CONTRACTOR has received the materials and equipment, free and clear of all Liens, charges, security interest, and encumbrances (which are hereinafter in these General Conditions referred to as "Liens") and evidence that the materials and equipment are covered by appropriate property insurance and other arrangements to protect the OWNER's interest therein, all of which will be satisfactory to the OWNER.

(1) Unless otherwise prescribed by law, the Value of Materials stored at the Site shall by 80% of the value of such materials.

b. Beginning with the second Application for Payment, each Application shall include an affidavit of the CONTRACTOR stating that all previous progress payments received on account of the Work have been applied on account to discharge the CONTRACTOR's legitimate obligations associated with prior Applications for Payment.

c. The amount of retainage with respect to progress payments will be as stipulated in the Agreement.

14.02.2. Review of Applications.

a. The ENGINEER will, within ten days after receipt of each Application for Payment, either indicate in writing a recommendation of payment and present the Application to the OWNER, or return the Application to the CONTRACTOR indicating in writing the ENGINEER's reason for refusing to recommend payment. In the latter case, the CONTRACTOR may make the necessary corrections and resubmit the Application.

b. The ENGINEER's recommendation of any payment requested in an Application for Payment will constitute a representation by the ENGINEER to the OWNER, based on the ENGINEER's observations on the Work site of the executed Work as an experienced and qualified design professional and on the ENGINEER's review of the Application for Payment and the accompanying data and schedules, that to the best of the ENGINEER's knowledge, information and belief:

(1) that the Work has progressed to the point indicated;

(2) the quality of the Work is generally in accordance with the Contract Documents (subject to an evaluation of the Work as a functioning whole prior to or upon Substantial Completion, to the results of any subsequent tests called for in the Contract Documents, to a final determination of quantities and classifications for Unit Price Work under applicable portions of Article 9, and to any other qualifications stated in the recommendation); and

(3) the conditions precedent to the CONTRACTOR's being entitled to such payment appear to have been fulfilled in so far as it is the ENGINEER's responsibility to observe the Work.

c. By recommending any such payment the ENGINEER will not thereby be deemed to have represented that:

(1) inspections made to check the quality or the quantity of the Work as it has been performed have been exhaustive, extended to every aspect of the Work in progress, or involved detailed inspections of the Work beyond the responsibilities specifically assigned to the ENGINEER in the Contract Documents; or

(2) that there may not be other matters or issues between the parties that might entitle the CONTRACTOR to be paid additionally by the OWNER or entitle the OWNER to withhold payment to the CONTRACTOR.

d. Neither the ENGINEER's review of the CONTRACTOR's Work for the purposes of recommending payments nor ENGINEER's recommendation of any payment, including final payment, will impose responsibility on the ENGINEER:

(1) to supervise, direct, or control the Work; or

(2) for the means, methods, techniques, sequences or procedures of construction, or the safety precautions and programs incident thereto; or

(3) for the CONTRACTOR's failure to comply with Laws and Regulations applicable to the CONTRACTOR's performance of the Work; or

(4) to make any examination to ascertain how or for what purposes the CONTRACTOR has used the moneys paid on account of the Contract Price; or.

(5) to determine that title to any of the Work, materials, or equipment has passed to the OWNER free and clear of any Liens.

e. The ENGINEER may refuse to recommend the whole or any part of any payment if, in the ENGINEER's opinion, it

would be incorrect to make such representations to the OWNER stated in Paragraph 14.02.2.b. The ENGINEER may also refuse to recommend any such payment, or, because of subsequently discovered evidence or the results of subsequent inspections or tests, revise or revoke any such payment previously made, to such extent as may be necessary in the ENGINEER's opinion to protect the OWNER from loss because:

(1) the Work is defective, or completed Work has been damaged requiring correction or replacement;
(2) the Contract Price has been reduced by Change Orders;
(3) the OWNER has been required to correct defective Work or complete Work in accordance with paragraph 13.09;
(4) the ENGINEER has actual knowledge of the occurrence of any of the events enumerated in paragraphs 15.02.1.

14.02.3. Payment Becomes Due.

a. Ten days after presentation of the Application for Payment to the OWNER with the ENGINEER's recommendation, the amount recommended will (subject to the provisions of Paragraph 14.02.4) become due, and when due will be paid by the OWNER to the CONTRACTOR.

14.03.4. Reduction in Payment.

a. The OWNER may refuse to make payment of the full amount recommended by the ENGINEER because:
(1) claims have been made against the OWNER on account of the CONTRACTOR's performance or furnishing of the Work;
(2) Liens have been filed in connection with the Work, except where the CONTRACTOR has delivered a specific bond satisfactory to the OWNER to secure the satisfaction and discharge of such Liens;
(3) there are other items entitling the OWNER to a set-off against the amount recommended; or
(4) the OWNER has actual knowledge of the occurrence of any of the events enumerated in appropriate portions of paragraphs 14.02.2, or paragraph 15.02.1.

b. If the OWNER refuses to make payment of the full amount recommended by the ENGINEER, the OWNER will give the CONTRACTOR immediate written notice (with a copy to the ENGINEER) stating the reasons for such action and promptly pay the CONTRACTOR any amount remaining after deduction of the amount so withheld. The OWNER shall promptly pay the CONTRACTOR the amount so withheld, or any adjustment thereto agreed to by the OWNER and CONTRACTOR, when the CONTRACTOR corrects to the OWNER's satisfaction the reasons for such action.

c. If it is subsequently determined that the OWNER's refusal was not justified, the amount wrongfully withheld shall be treated as an amount due as determined by Paragraph 14.02.3.a.

C. CONTRACTOR'S WARRANTY OF TITLE

14.03. The CONTRACTOR warrants and guarantees that title to all Work, materials, and equipment covered by any Application for Payment, whether incorporated in the Project or not, will pass to the OWNER no later that the time of payment free and clear of all Liens.

D. SUBSTANTIAL COMPLETION:

14.04.1. When the CONTRACTOR considers the entire Work ready for its intended use, the CONTRACTOR shall notify the OWNER and ENGINEER in writing that the entire Work is substantially complete (except for items specifically listed by the CONTRACTOR as incomplete) and request that the ENGINEER issue a certificate of Substantial Completion.

14.04.2. Promptly after the CONTRACTOR's notification, the OWNER, CONTRACTOR, and ENGINEER shall make an inspection of the Work to determine the status of completion. If the ENGINEER does not consider the Work substantially complete, the ENGINEER will notify the CONTRACTOR in writing giving the reason therefore.

14.04.3. If the ENGINEER considers the Work substantially complete, the ENGINEER will deliver to the OWNER a tentative certificate of Substantial Completion which shall fix the date of the Substantial Completion. There shall be attached to the certificate a tentative list of items to be completed or corrected before final payment. The OWNER shall have seven days after receipt of the tentative certificate during which to make written objection to the ENGINEER as to any provisions of the certificate or attached list. If, after considering such objections, the ENGINEER concludes that the Work is not substantially complete, the ENGINEER will within 14 days after submission of the tentative certificate to the OWNER notify the CONTRACTOR in writing, stating the reasons therefore. If, after consideration of the OWNER's objections, the ENGINEER considers the Work substantially complete, the ENGINEER will within said 14 days execute and deliver to the OWNER and CONTRACTOR a definitive certificate of Substantial Completion (with a revised tentative list of items to be completed or corrected) reflecting such changes from the tentative certificate as the ENGINEER believes justified after consideration of any objections from the OWNER.

14.04.4. At the time of delivery of the tentative certificate of Substantial Completion, the ENGINEER will deliver to the OWNER and CONTRACTOR a written recommendation as to division of responsibilities pending final payment between the OWNER and CONTRACTOR with respect to security, operation, safety, and protection of the Work, maintenance, heat, utilities, insurance and warranties and guarantees. Unless the OWNER and CONTRACTOR agree otherwise in writing and so inform the ENGINEER prior to the ENGINEER's issuing the definitive certificate of Substantial Completion, the ENGINEER's aforesaid

recommendation will be binding on the OWNER and CONTRACTOR until final payment.

14.04.5. The OWNER shall have the right to exclude the CONTRACTOR from the Work site after the date of Substantial Completion, subject to allowing the CONTRACTOR reasonable access to complete or correct items on the tentative list.

E. PARTIAL UTILIZATION:

14.05.1. Prior to Substantial Completion of all the Work, the OWNER may use or occupy any substantially completed part of the Work which has specifically been identified in the Contract Documents, or which the OWNER, ENGINEER, and CONTRACTOR agree constitutes a separately functioning and usable part of the Work that can be used by the OWNER for its intended purpose without significant interference with the CONTRACTOR's performance of the remainder of the Work, subject to the following conditions:

a. The OWNER at any time may request the CONTRACTOR in writing to permit the OWNER to use any such part of the Work which the OWNER believes to be ready for its intended use and substantially complete. If and when the CONTRACTOR agrees that such part of the Work is substantially complete, the CONTRACTOR will certify to the OWNER and ENGINEER that such part of the Work is substantially complete and request the ENGINEER to issue a certificate of Substantial Completion for that part of the Work.

b. The CONTRACTOR at any time may notify the OWNER and ENGINEER in writing that the CONTRACTOR considers any such part of the Work ready for its intended use and substantially complete and request the ENGINEER to issue a certificate of Substantial Completion for that part of the Work.

c. Within a reasonable time after either such request, the OWNER, CONTRACTOR and ENGINEER shall make an inspection of that part of the Work to determine its status of completion. If the ENGINEER does not consider that part of the Work to be substantially complete, the ENGINEER will notify the OWNER and CONTRACTOR in writing giving the reasons therefore. If the ENGINEER considers that part of the Work to be substantially complete, the provisions of paragraph 14.04 will apply with respect to certification of Substantial Completion of that part of the Work and the division of responsibility in respect thereof and access thereto.

d. No use or occupancy or separate operation of part of the Work may occur prior to compliance with the requirements of paragraph 5.10 regarding property insurance.

F. FINAL INSPECTION:

14.07. Upon written notice from the CONTRACTOR that the entire Work or an agreed portion thereof is complete, the ENGINEER will promptly make a final inspection with the OWNER and CONTRACTOR and will notify the CONTRACTOR in writing of all particulars in which this inspection reveals that the Work is incomplete or defective. The CONTRACTOR shall immediately take such measure as are necessary to complete such Work or remedy such deficiencies.

G. FINAL PAYMENT:

14.07.1. Application for Payment.

a. After the CONTRACTOR has, in the opinion of the ENGINEER, satisfactorily completed all corrections identified during the final inspection and has delivered in accordance with the Contract Documents all maintenance and operating instructions, schedules, guarantees, Bonds, certificates or other evidence of insurance certificates of inspection, marked-up record documents (as provided in paragraph 6.12) and other documents, the CONTRACTOR may make application for final payment following the procedure for progress payments.

b. The final Application for Payment shall be accompanied (except as previously delivered) by:

(1) all documentation called for in the Contract Documents, including but not limited to the evidence of insurance required by subparagraph 5.04.2.g;

(2) consent of the surety, if any, to final payment;

(3) a list of all claims against the OWNER that the CONTRACTOR believes are unsettled; and

(4) complete and legally effective releases or waivers (satisfactory to the OWNER) of all Lien rights arising out of or Lien filed in connection with the Work.

c. In lieu of such releases or waivers of Liens specified in Paragraph 14.07.1.b and as approved by the OWNER, the CONTRACTOR may furnish receipts or releases in full and an affidavit of the CONTRACTOR that: (i) the releases and receipts include all labor, services, materials and equipment for which a Lien could be filed; and (ii) all payrolls, material and equipment bills, and other indebtedness connected with the Work for which the OWNER or OWNER's property might in any way be responsible, have been paid or otherwise satisfied. If any Subcontractor or Supplier fails to furnish such a release or receipt in full, the CONTRACTOR may furnish a Bond or other collateral satisfactory to the OWNER to indemnify the OWNER against any Lien.

14.07.2. Engineer's Review of Application and Acceptance.

a. If, on the basis of the ENGINEER's observation of the Work during construction and final inspection, and the ENGINEER's review of the final Application for Payment and accompanying documentation as required by the Contract Documents, the ENGINEER is satisfied that the Work has been completed and the CONTRACTOR's other obligations under the Contract Documents have been fulfilled, the ENGINEER will, within ten days after receipt of the final Application for Payment, indicate in writing the ENGINEER's recommendation of payment and present the Application to the OWNER for payment. At the same time the ENGINEER will also give written notice to the OWNER and CONTRACTOR that the Work is acceptable subject to the provisions of paragraph 14.09. Otherwise, the ENGINEER will return the Application to the CONTRACTOR, indicating in writing the reasons for refusing to recommend final payment, in which case the CONTRACTOR shall make the necessary corrections and resubmit the Application.

14.07.3. Payment Becomes Due.

a. Thirty days after presentation to the OWNER of the Application for Payment and accompanying documentation, the amount recommended by the ENGINEER, less any sum the OWNER is entitled to set off against the ENGINEER's recommendation, including but not limited to liquidated damages, will become due, and will be paid by the OWNER to the CONTRACTOR.

H. FINAL COMPLETION DELAYED

14.08. If, though no fault of the CONTRACTOR, final completion of the Work is significantly delayed, and if the ENGINEER so confirms, the OWNER shall, upon receipt of the CONTRACTOR's final Application for Payment (for Work fully completed and accepted) and recommendation of the ENGINEER, and without terminating the Contract, make payment of the balance due for that portion of the Work fully completed and accepted. If the remaining balance to be held by the OWNER for Work not fully completed or corrected is less than the retainage stipulated in the Agreement, and if Bonds have been furnished as required in paragraph 5.01, the written consent of the surety to the payment of the balance due for that portion of the Work fully completed and accepted shall be submitted by the CONTRACTOR to the ENGINEER with the Application for such payment. Such payment shall be made under the terms and conditions governing final payment, except that it shall not constitute a waiver of claims.

I. WAIVER OF CLAIMS:

14.09.1. The making and acceptance of final payment will constitute:

a. A waiver of all claims by the OWNER against the CONTRACTOR, except claims arising from unsettled Liens, from defective Work appearing after final inspection pursuant to paragraph 14.06, from failure to comply with the Contract Documents or the term of any special guarantees specified therein, or from CONTRACTOR's continuing obligations under the Contract Documents; and

b. A waiver of all claims by the CONTRACTOR against the OWNER other than those previously made in accordance with the requirements herein and expressly acknowledged by the OWNER inwriting and still unsettled.

ARTICLE 15 --- SUSPENSION OF WORK AND TERMINATION

A. OWNER MAY SUSPEND WORK:

15.01. At any time and without cause, the OWNER may suspend the Work or any portion thereof for a period of not more than 90 consecutive days by notice in writing to the CONTRACTOR and ENGINEER which will fix the date on which the Work will be resumed. The CONTRACTOR shall resume the Work on the date so fixed. The CONTRACTOR shall be allowed an adjustment in the Contract Price or an extension of the Contract Times, or both, directly attributable to any such suspension if the CONTRACTOR makes a claim therefore as provided in Paragraph 10.05.

B. OWNER MAY TERMINATE FOR CAUSE:

15.02.1. the occurrence of any one or more of the following events will justify termination for cause:

a. The CONTRACTOR's persistent failure to perform the Work in accordance with the Contract Documents (including, but not limited to, failure to supply sufficient skilled workers or suitable materials or equipment or failure to adhere to the progress schedule established under paragraph 2.07 as adjusted from time to time pursuant to paragraph 6.04);

b. The CONTRACTOR's disregard of Laws or Regulations of any public body having jurisdiction;

c. The CONTRACTOR's disregard of the authority of the ENGINEER; or

d. The CONTRACTOR's violation in any substantial way of any provisions of the Contract Documents.

15.02.2. If one or more of the events identified in Paragraph 15.02.1 occur, the OWNER may, after giving the CONTRACTOR (and surety) seven days written notice of its intent to terminate the services of the CONTRACTOR:

a. exclude the CONTRACTOR from the Work site, and take possession of the Work and of all the CONTRACTOR's tools, appliances, construction equipment and machinery at the Work site, and use the same to the full extent they could be used by the CONTRACTOR (without liability to the CONTRACTOR for trespass or conversion),

b. incorporate in the Work all materials and equipment stored at the Work site or for which the OWNER has paid the CONTRACTOR but which are stored elsewhere, and

c. complete the Work as the OWNER may deem expedient.

15.02.3. If the OWNER proceeds as provided in Paragraph 15.02.2, the CONTRACTOR shall not be entitled to receive any further payment until the Work in completed. If the unpaid balance of the Contract Price exceeds all claims, costs, losses and damages (including but not limited to all fees and charges of engineers, attorneys, and other professionals and all court or arbitration or other dispute resolution costs) sustained by the OWNER arising out of or resulting from completing the Work, such excess will be paid to the CONTRACTOR. If such claims, costs, losses and damages exceed such unpaid balance, the CONTRACTOR shall pay the difference to the OWNER. Such claims, costs, losses and damages incurred by the OWNER will be reviewed by the ENGINEER as to their reasonableness and when so approved by the ENGINEER, incorporated in a Change Order. When exercising any rights or remedies under this paragraph the OWNER shall not be required to obtain the lowest price for the Work performed.

15.02.4. Notwithstanding Paragraphs 15.02.2 and 15.02.3, the CONTRACTOR's services will not be terminated if the CONTRACTOR begins, within seven days of receipt of notice of intent to terminate, to correct its failure to perform and proceeds diligently to cure such failure within no more that 30 days of receipt of said notice.

15.02.5. Where the CONTRACTOR's services have been so terminated by the OWNER, the termination will not affect any rights or remedies of the OWNER against the CONTRACTOR then existing or which may thereafter accrue. Any retention or payment of the moneys due the CONTRACTOR by the OWNER will not release the CONTRACTOR from liability.

15.02.6. If and to the extent that the CONTRACTOR has provided a performance bond under the provisions of Paragraph 5.01.1, the termination procedures of that bond shall supersede the provisions of Paragraph 15.02.2 and 15.02.3.

C. OWNER MAY TERMINATE FOR CONVENIENCE

15.03.1. Upon seven days written notice to the CONTRACTOR and ENGINEER, the OWNER may, without cause and without prejudice to any other right or remedy of the OWNER, terminate the Contract. In such case, the CONTRACTOR shall be paid for (without duplication of any items):

a. completed and acceptable Work executed in accordance with the Contract Documents prior to the effective date of termination, including fair and reasonable sums for overhead and profit on such Work;

b. expenses sustained prior to the effective date of termination in performing services and furnishing labor, materials or equipment as required by the Contract Documents in connection with uncompleted Work, plus fair and reasonable sums for overhead and profit on such expenses;

c. all claims, costs, losses and damages (including but not limited to all fees and charges of engineers, attorneys, and other professionals and all court or arbitration or other dispute resolution costs) incurred in settlement of terminated contracts with Subcontractors, Suppliers and others; and

d. reasonable expenses directly attributable to termination.

D. CONTRACTOR MAY STOP WORK OR TERMINATE

15.04.1. If, through no act or fault of the CONTRACTOR, (i) the Work is suspended for more than 90 consecutive days by the OWNER or under an order of court or other public authority, or (ii) the ENGINEER fails to act on any Application for Payment within 30 days after it is submitted, or (iii) the OWNER fails for 30 days to pay the CONTRACTOR any sum finally determined to be due, then the CONTRACTOR may, upon seven days written notice to the OWNER and ENGINEER, and provided the OWNER and ENGINEER do not remedy such suspension or failure within that time, terminate the Contract and recover from the OWNER payment on the same terms as provided in Paragraph 15.03.

15.04.2. In lieu of terminating the Contract and without prejudice to any other right or remedy, if the ENGINEER has failed

to act on an Application for Payment within 30 days after it is submitted, or the OWNER has failed for 30 days to pay the CONTRACTOR any sum finally determined to be due, the CONTRACTOR may, seven days after written notice to the OWNER and ENGINEER, stop the Work until payment is made of all such amounts due the CONTRACTOR, including interest thereon. The provisions of this paragraph 15.04 are not intended to preclude the CONTRACTOR from making claim under Paragraph 10.05 for an adjustment in Contract Price or Contract Times or otherwise for expenses or damage directly attributable to the CONTRACTOR's stopping Work as permitted by this paragraph.

ARTICLE 16 --- DISPUTE RESOLUTION

A. METHODS AND PROCEDURES

16.01.1. Either the OWNER or CONTRACTOR may request mediation of any claim submitted to the ENGINEER for a decision under applicable portions of Article 10 before such decision becomes final and binding. The mediation will be governed

by the Construction Industry Mediation Rules of the American Arbitration Association in effect as of the Effective Date of the Agreement. The request for mediation shall be submitted in writing to the American Arbitration Association and the other party to the Contract. Timely submission of the request shall stay the effect of Paragraph 10.05.5.

16.01.2. The OWNER and CONTRACTOR shall participate in the mediation process in good faith. The process shall be concluded within 60 days of filing of the request. The date of termination of the mediation shall be determined by application of the mediation rules referenced above.

16.01.3. If the Claim is not resolved by mediation, the ENGINEER's action under Paragraph 10.05.3 or a denial pursuant to Paragraph 10.05.3.c or 10.05.4 shall become final and binding 30 days after termination of the mediation, unless, within that time period, the OWNER or CONTRACTOR:

1. elects in writing to invoke any dispute resolution process provided for in the Supplemental General Conditions; or

2. agrees with the other party to submit the Claim to another dispute resolution process; or

3. gives written notice to the other party of their intent to submit the Claim to a court of competent jurisdiction.

ARTICLE 17 --- MISCELLANEOUS

A. GIVING NOTICE:

17.01.1. Whenever any provision of the Contract Documents requires the giving of written notice, it will be deemed to have been validly given if:

1. delivered in person to the individual or to a member of the firm or to an officer of the corporation for whom it is intended; or,

2. delivered at or sent by registered or certified mail, postage prepaid, to the last business address known to the giver of the notice.

B. COMPUTATION OF TIME:

17.02. When any period of time is referred to in the Contract Documents by days, it will be computed to exclude the first and include the last day of such period. If the last of any such period falls on a Saturday or Sunday or on a day made a legal holiday by the law of the applicable jurisdiction, such day will be omitted from the computation.

C. CUMULATIVE REMEDIES

17.03. The duties and obligations imposed by these General Conditions and the rights and remedies available hereunder to the parties hereto are in addition to, and are not to be construed in any way as a limitation of, any rights and remedies available to any or all of them which are otherwise imposed or available by Laws or Regulations, by special warranty or guarantee or by other provisions of the Contract Documents. The provisions of this Paragraph will be as effective as if repeated specifically in the Contract Documents in connection with each particular duty, obligation, right and remedy to which they apply.

D. SURVIVAL OF OBLIGATIONS

17.04. All representatives, indemnifications, warranties, and guarantees made in, required by, or given in accordance with the Contract Documents, as well as all continuing obligations indicated in the Contract Documents, will survive final payment, completion, and acceptance of the Work or termination or completion of the Contract or termination of the services of the CONTRACTOR.

E. CONTROLLING LAW

17.05. This Contract is to be governed by the law of the state in which the Project is located.

F. HEADINGS

17.06. Article and paragraph headings are inserted for convenience only and do not constitute parts of these General Conditions.

END OF GENERAL CONDITIONS

TABLE OF CONTENTS

DIVISION 01 - GENERAL REQUIREMENTS

01100 - PROJECT DESCRIPTION
01200 - PRICE AND PAYMENT PROCEDURES
01270 - UNIT PRICES
01300 - ADMINISTRATIVE REQUIREMENTS
01325 - CONSTRUCTION PROGRESS SCHEDULE
01400 - QUALITY REQUIREMENTS
01500 - TEMPORARY FACILITIES AND CONTROLS
01560 - SAFETY STANDARDS AND ACCIDENT PREVENTION
01600 - PRODUCT REQUIREMENTS
01700 - EXECUTION REQUIREMENTS
01780 - CLOSEOUT SUBMITTALS
01785 - PROJECT EVALUATION

DIVISION 02 - PROJECT CONSTRUCTION

02100 - MEASUREMENT AND PAYMENT
02300 - GENERAL EARTHWORK
02312 - TRENCHING FOR PIPE WORK
02315 - STRUCTURAL EXCAVATION
02316 - FILL AND BACKFILL
02510 - WATER DISTRIBUTION SYSTEM
02512 – PRESSURE REGULATING VALVE STATION
02515 - DISIFECTION OF WATER DISTRIBUTION SYSTEM
02721 – GRAVEL SURFACING AND ROAD BASE

DIVISION 03 - CONCRETE

03100 - CONCRETE FORMWORK
03200 - REINFORCEMENT STEEL
03290 - JOINTS IN CONCRET
03300 - CAST-IN-PLACE CONCRETE
03350 - BONDED CONCRETE FLOOR OVERLAY
03356 - CONCRETE FLOOR FINISHING

DIVISION 07 - MOISTURE PROTECTION

07616 - XYPEX COATINGS
07900 - JOINT SEALERS

DIVISION 16 – ELECTRICAL

16000 - ELECTRICAL SYSTEMS
16060 - GROUNDING AND BONDING
16070 - HANGERS AND SUPPORTS
16075 - ELECTRICAL IDENTIFICATION
16123 - BUILDING WIRE AND CABLES
16131 - CONDUITS
16138 - BOXES
16139 - CABINETS AND ENCLOSURES
16140 - WIRING DEVICES
16155 - EQUIPMENT WIRING

16210 - ELECTRICAL UTILITY SERVICES
16412 - ENCLOSED SWITCHES
16423 - ENCLOSED MOTOR CONTROLLERS
16443 - PANELBOARDS
16520 - LUMINAIRES

DIVISION 01

GENERAL REQUIREMENTS

SECTION 01100

PROJECT DESCRIPTION

PART 1 GENERAL

1.01 PROJECT

A. Project Name: 350,000 GALLON WATER TANK Project (Phase 6), Located at Powder Mountain, Weber County, Utah.

B. Project Scope: The Project consists of the items of Work listed in SECTION 02100 - MEASUREMENT AND PAYMENT.

C. Owner's Name: Powder Mountain Water and Sewer Improvement District (PMWSID)

1. District Engineer: Brad Gilson, P.E.

D. Design Engineer 's Name: Gilson Engineering, Inc., Consultant Engineers and Surveyors.

E. The Project shall be constructed according to these project specifications and drawings; and according to the Standard Technical Specifications and Drawings for PMWSID, and Addendum, Latest Edition.

1. Work on this project shall be done as specified in these project specifications and as indicated on the project drawings.

2. All work not covered by these specifications shall be done as specified in the Standard Specification and as indicated on the Standard Drawings.

3. Copies of the Standard Technical Specifications may be obtained from the office of the Design Engineer for a non-refundable payment of $40.00 for each set; checks made payable to Gilson Engineering.

1.02 CONTRACT DESCRIPTION

A. Contract Type: A single prime contract for each Phase based on a Stipulated Price as described in Document 00500 - Agreement.

1.03 PROJECT DRAWINGS

A. The PROJECT drawings shall form a part of this contract as forth in the Agreement.

PART 2 PRODUCTS - NOT USED

PART 3 EXECUTION - NOT USED

END OF SECTION

SECTION 01200

PRICE AND PAYMENT PROCEDURES

PART 1 GENERAL

1.01 SECTION INCLUDES

A. Procedures for preparation and submittal of applications for progress payments.

B. Documentation of changes in Contract Price and Contract Time.

C. Change procedures.

D. Correlation of Contractor submittals based on changes.

E. Procedures for preparation and submittal of application for final payment.

1.02 RELATED SECTIONS

A. Document 00500 - Agreement: Contract Price, retainages, payment period, monetary values of unit prices.

B. Document 00700 - General Conditions and Document 00800 - Supplemental General Conditions: Additional requirements for progress payments, final payment, changes in the Work.

C. Document 00800 - Supplemental General Conditions: Percentage allowances for Contractor's overhead and profit.

1.03 APPLICATIONS FOR PROGRESS PAYMENTS

A. Payment Period: Submit at intervals stipulated in Section 19 of the General Conditions.

B. Present required information in typewritten form.

C. Form: Contract Form including continuation sheets when required.

D. For each item, provide a column for listing each of the following:

1. Item Number.
2. Description of work.
3. Scheduled Values.
4. Previous Applications.
5. Work in Place under this Application.
6. Authorized Change Orders.
7. Total Completed to Date of Application.
8. Percentage of Completion.
9. Balance to Finish.
10. Retainage.

E. Execute certification by signature of authorized officer.

F. List each authorized Change Order as a separate line item, listing Change Order number and dollar amount as for an original item of Work.

G. Submit three copies of each Application for Payment.

H. Include the following with the application:

1. Transmittal letter as specified for Submittals in Section 01300.

2. Construction progress schedule, revised and current as specified in Section 01300.

3. Project record documents as specified in Section 01780, for review by the Owner which will be returned to the Contractor.

I. When Engineer or District Inspector requires substantiating information, submit data justifying dollar amounts in question. Provide one copy of data with cover letter for each copy of submittal. Show application number and date, and line item by number and description.

1.04 MODIFICATION PROCEDURES

A. Submit name of the individual authorized to receive change documents and who will be responsible for informing others in Contractor's employ or Subcontractors of changes to the Work.

B. The Engineer or District Inspector will advise of minor changes in the Work not involving an adjustment to Contract Price or Contract Time as authorized by the Conditions of the Contract by issuing supplemental instructions in writing.

C. Construction Change Directive: Engineer may issue a document, signed by the Owner, instructing the Contractor to proceed with a change in the Work, for subsequent inclusion in a Change Order.

1. The document will describe changes in the Work, and will designate method of determining any change in Contract Price or Contract Time.

2. Promptly execute the change in Work.

D. Proposal Request: The Engineer may issue a document which includes a detailed description of a proposed change with supplementary or revised Drawings and specifications, a change in Contract Time for executing the change and the period of time during which the requested price will be considered valid. Contractor shall prepare and submit a fixed price quotation within seven days.

E. The Contractor may propose a change by submitting a request for change to the Engineer, describing the proposed change and its full effect on the Work, with a statement describing the reason for the change, and the effect on the Contract Price and Contract Time with full documentation and a statement describing the effect on Work by separate or other contractors. Document any requested substitutions in accordance with Section 01600.

F. Computation of Change in Contract Amount:

1. For change requested by Engineer for work falling under a fixed price contract, the amount will be based on Contractor's price quotation.

2. For change requested by Contractor, the amount will be based on the Contractor's request for a Change Order as approved by Engineer.

3. For pre-determined unit prices and quantities, the amount will be based on the fixed unit prices.

4. For change ordered by Engineer without a quotation from the Contractor, the amount will be determined by the Engineer based on the Contractor's substantiation of costs as specified for Time and Material work.

G. Substantiation of Costs: Provide full information required for evaluation.

1. On request, provide following data:
   a. Quantities of products, labor, and equipment.
   b. Taxes, insurance, and bonds.
   c. Overhead and profit.
   d. Justification for any change in Contract Time.
   e. Credit for deletions from Contract, similarly documented.

2. Support each claim for additional costs with additional information:
   a. Origin and date of claim.
   b. Dates and times work was performed, and by whom.
   c. Time records and wage rates paid.
   d. Invoices and receipts for products, equipment, and subcontracts, similarly documented.

3. For Time and Material work, submit itemized account and supporting data after completion of change, within time limits indicated in the Conditions of the Contract.

H. Execution of Change Orders: Engineer will issue Change Orders for signatures of parties as provided in the Conditions of the Contract-on-Contract Change Order Form.

I. After execution of Change Order, promptly revise Schedule of Values and Application for Payment forms to record each authorized Change Order as a separate line item and adjust the Contract Sum.

J. Promptly revise progress schedules to reflect any change in Contract Time, revise sub-schedules to adjust times for other items of work affected by the change, and resubmit.

K. Promptly enter changes in Project Record Documents.

1.05 APPLICATION FOR FINAL PAYMENT

A. Prepare Application for Final Payment as specified for progress payments, identifying total adjusted Contract Price, previous payments, and sum remaining due.

B. Application for Final Payment will not be considered until the following have been accomplished:

1. All closeout procedures specified in Section 01700.

PART 2 PRODUCTS - NOT USED

PART 3 EXECUTION - NOT USED

END OF SECTION

SECTION 01270

UNIT PRICES

PART 1 GENERAL

1.01 SECTION INCLUDES

A. Measurement and payment criteria applicable to Work performed under a unit price or lump sum price payment method.

B. Defect assessment and non-payment for rejected work.

1.02 COSTS INCLUDED

A. Unit Prices or Lump Sum Prices included on the Bid Form shall include full compensation for all required labor, Products, tools, equipment, plant, transportation, services and incidentals; erection, application or installation of an item of the Work; overhead and profit.

1.03 UNIT QUANTITIES SPECIFIED

A. Quantities indicated in the Bid Form are for bidding and contract purposes only. Quantities and measurements of actual Work will determine the payment amount.

B. Quantities indicated in the Bid Form will be the maximum amount of these items to be used, without prior approval, in writing, by the Engineer. Over-runs of these items will not be paid for if prior approval was not received by the Contractor; and will be at the Contractor own expense, with no additional cost to the Owner.

1.04 MEASUREMENT OF QUANTITIES

A. Measurement methods delineated in the individual specification sections complement the criteria of this section. In the event of conflict, the requirements of the individual specification section govern.

B. Take all measurements and compute quantities. Measurements and quantities will be verified by the District Inspector or Engineer.

C. Assist by providing necessary equipment, workers, and survey personnel as required.

D. Measurement Devices:

1. Weigh Scales: Inspected, tested and certified by the applicable state Weights and Measures department within the past year.

2. Platform Scales: Of sufficient size and capacity to accommodate the conveying vehicle.

3. Metering Devices: Inspected, tested and certified by the applicable State department within the past year.

E. Measurement by Weight:

1. Concrete reinforcing steel, rolled or formed steel or other metal shapes will be measured by handbook weights. Welded assemblies will be measured by handbook or scale weight.

2. Soil material will be measured by scale weight. Weights will be converted to volume measurements by use of soil density.

F. Measurement by Volume: Measured by cubic dimension using mean length, width and height or thickness.

G. Measurement by Area: Measured by square dimension using mean length and width or radius.

H. Linear Measurement: Measured by linear dimension, at the item centerline or mean chord.

I. Stipulated Sum/Price Measurement: Items measured by weight, volume, area, or linear means or combination, as appropriate, as a completed item or unit of the Work.

J. Perform surveys required to determine quantities, including control surveys to establish measurement reference lines. Notify the District Inspector or Engineer prior to starting work.

K. Contractor 's Engineer Responsibilities: Sign surveyor's field notes or keep duplicate field notes, calculate and certify quantities for payment purposes.

1.05 PAYMENT

A. Payment for Work governed by unit prices will be made on the basis of the actual measurements and quantities of Work which is incorporated in or made necessary by the Work and accepted by the District Inspector or Engineer, multiplied by the unit sum/price.

B. Payment will not be made for any of the following:

1. Products wasted or disposed of in a manner that is not acceptable.

2. Products determined as unacceptable before or after placement.

3. Products not completely unloaded from the transporting vehicle.

4. Products placed beyond the lines and levels of the required Work.

5. Products remaining on hand after completion of the Work.

6. Loading, hauling, and disposing of rejected Products.

1.06 DEFECT ASSESSMENT

A. Replace Work, or portions of the Work, not conforming to specified requirements.

B. If, in the opinion of the District Inspector or Engineer it is not practical to remove and replace the Work, the District Inspector or Engineer, will direct one of the following remedies:

1. The defective Work may remain, but the unit sum/price will be adjusted to a new sum/price at the discretion of the Engineer.

2. The defective Work will be partially repaired to the instructions of the Engineer, and the unit sum/price will be adjusted to a new sum/price at the discretion of the Engineer.

C. If, in the opinion of the Owner, it is not practical to remove and replace the Work, the Owner will direct one of the following remedies:

1. The defective Work may remain, but the unit sum/price will be adjusted to a new sum/price at the discretion of the Owner.

2. The defective Work will be partially repaired to the instructions of the Owner, and the unit sum/price will be adjusted to a new sum/price at the discretion of the Owner.

D. The individual specification sections may modify these options or may identify a specific formula or percentage sum/price reduction.

E. The authority of the Engineer to assess the defect and identify payment adjustment is final.

PART 2 PRODUCTS - NOT USED

PART 3 EXECUTION - NOT USED

END OF SECTION

SECTION 01300

ADMINISTRATIVE REQUIREMENTS

PART 1 GENERAL

1.01 SECTION INCLUDES

A. Preconstruction meeting.

B. Progress meetings.

C. Construction progress schedule.

D. Progress videotapes and photographs.

E. Coordination drawings.

F. Submittals for review, information, and project closeout.

G. Number of copies of submittals.

H. Submittal procedures.

1.02 RELATED SECTIONS - NOT USED

1.03 PROJECT COORDINATION

A. Project Coordinator: District Engineer.

B. Cooperate with the Project Coordinator in allocation of mobilization areas of site; for field offices and sheds, for project access, traffic, and parking facilities.

C. During construction, coordinate use of site and facilities through the Project Coordinator.

D. Comply with Project Coordinator's procedures for intra-project communications; submittals, reports and records, schedules, coordination drawings, and recommendations; and resolution of ambiguities and conflicts.

E. Comply with instructions of the Project Coordinator for use of temporary utilities and construction facilities.

F. Coordinate field engineering and layout work under instructions of the Project Coordinator.

G. Make the following types of submittals to the Engineer through the Project Coordinator:

1. Requests for interpretation.

2. Requests for substitution.

3. Shop drawings, product data, and samples.

4. Test and inspection reports.

5. Design data.

6. Manufacturer's instructions and field reports.

7. Applications for payment and change order requests.

8. Progress schedules.
9. Coordination drawings.
10. Closeout submittals.

PART 2 PRODUCTS - NOT USED

PART 3 EXECUTION

3.01 PRECONSTRUCTION MEETING

A. Owner will schedule a meeting after Notice of Award.

B. Attendance Required:

1. Owner.
2. District Engineer.
3. Engineer.
4. Contractor.

C. Prior to Meeting:

1. Execution of Owner -Contractor Agreement.
2. Submission of executed bonds and insurance certificates.

D. Agenda:

1. Distribution of Contract Documents.
2. Submission of list of Subcontractors, and progress schedule.
3. Designation of personnel representing the parties in Contract, Contractor, Owner, and the Engineer.
4. Procedures and processing of field decisions, submittals, substitutions, applications for payments, proposal request, Change Orders, and Contract closeout procedures.
5. Review safety standards and procedures.
6. Scheduling.
7. Scheduling activities of a testing company and Geotechnical Engineer, if required.

E. Record minutes and distribute copies within two days after meeting to participants, with one copy to Contractor, Engineer, Owner, participants, and those affected by decisions made.

3.02 PROGRESS MEETINGS

A. Schedule and administer meetings throughout progress of the Work at maximum monthly intervals.

B. Make arrangements for meetings, prepare agenda with copies for participants, preside at meetings.

C. Attendance Required: Job superintendent, major Subcontractors and suppliers, Owner, District Engineer, Engineer, as appropriate to agenda topics for each meeting.

D. Agenda:

1. Review minutes of previous meetings.
2. Review of Work progress.
3. Field observations, problems, and decisions.
4. Identification of problems which impede planned progress.
5. Review of submittals schedule and status of submittals.
6. Review of off-site fabrication and delivery schedules.
7. Maintenance of progress schedule.
8. Corrective measures to regain projected schedules.
9. Planned progress during succeeding work period.
10. Coordination of projected progress.
11. Maintenance of quality and work standards.
12. Effect of proposed changes on progress schedule and coordination.
13. Other business relating to Work.

E. Record minutes and distribute copies within two days after meeting to participants, with one copy to Contractor, Engineer, Owner, participants, and those affected by decisions made.

3.03 CONSTRUCTION PROGRESS SCHEDULE - NOT USED

3.04 PROGRESS VIDEOTAPES AND PHOTOGRAPHS - NOT USED

3.05 COORDINATION DRAWINGS

A. Provide information required by Project Coordinator for preparation of coordination drawings.

B. Review drawings prior to submission to Engineer.

3.06 SUBMITTALS FOR REVIEW

A. When the following are specified in individual sections, submit them for review:

1. Product data.
2. Shop drawings.
3. Samples for selection.
4. Samples for verification.

B. Submit to Engineer for review for the limited purpose of checking for conformance with information given and the design concept expressed in the contract documents.

C. Samples will be reviewed only for aesthetic, color, or finish selection.

D. After review, provide copies and distribute in accordance with SUBMITTAL PROCEDURES article below and for record documents purposes described in Section 01780 - CLOSEOUT SUBMITTALS.

3.07 SUBMITTALS FOR INFORMATION

A. When the following are specified in individual sections, submit them for information:

1. Design data.

2. Certificates.

3. Test reports.

4. Inspection reports.

5. Manufacturer's instructions.

6. Manufacturer's field reports.

7. Other types indicated.

B. Submit for the Engineer's knowledge as contract administrator or for the Owner. No action will be taken.

3.08 SUBMITTALS FOR PROJECT CLOSEOUT

A. When the following are specified in individual sections, submit them at project closeout:

1. Project record documents.

2. Operation and maintenance data.

3. Warranties.

4. Bonds.

5. Other types as indicated.

B. Submit for the Owner 's benefit during and after project completion.

3.09 NUMBER OF COPIES OF SUBMITTALS

A. Documents for Review:

1. Small size sheets, not larger than 8-1/2 x 11 inches: Submit the number of copies which the Contractor requires, plus two copies which will be retained by the Engineer.

2. Larger sheets, not larger than 36 x 48 inches: Submit the number of opaque reproductions which Contractor requires, plus two copies which will be retained by Engineer.

B. Documents for Information: Submit two copies.

C. Documents for Project Closeout: Make one reproduction of submittal originally reviewed. Submit one extra of submittals for information.

D. Samples: Submit the number specified in individual specification sections; one of which will be retained by Engineer.

1. After review, produce duplicates.

2. Retained samples will not be returned to Contractor unless specifically so stated.

3.10 SUBMITTAL PROCEDURES

A. Transmit each submittal with transmittal letter.

B. Sequentially number the transmittal letters. Revise submittals with original number and a sequential alphabetic suffix.

C. Identify Project, Contractor, Subcontractor or supplier; pertinent drawing and detail number, and specification section number, as appropriate on each copy.

D. Apply Contractor 's stamp, signed or initialed certifying that review, approval, verification of Products required, field dimensions, adjacent construction Work, and coordination of information is in accordance with the requirements of the Work and Contract Documents.

E. Deliver submittals to Engineer at business address.

F. Schedule submittals to expedite the Project, and coordinate submission of related items.

G. For each submittal for review, allow 7 days excluding delivery time to and from the Contractor.

H. Identify variations from Contract Documents and Product or system limitations which may be detrimental to successful performance of the completed Work.

I. Provide space for Contractor and Engineer review stamps.

J. When revised for re-submission, identify all changes made since previous submission.

K. Distribute copies of reviewed submittals as appropriate. Instruct parties to promptly report any inability to comply with requirements.

L. Submittals not requested will not be recognized or processed.

END OF SECTION

SECTION 01325

CONSTRUCTION PROGRESS SCHEDULE

PART 1 GENERAL

1.01 SECTION INCLUDES

A. Preliminary schedule.

B. Construction progress schedule, bar chart type.

1.02 REFERENCES

A. AGC (CPM) - The Use of CPM in Construction - A Manual for General Contractors and the Construction Industry; Associated General Contractors of America; latest edition.

B. M-H (CPM) - CPM in Construction Management - Project Management with CPM, O'Brien, McGraw-Hill Book Company; latest edition.

1.03 SUBMITTALS

A. Within 10 days after date of Agreement, submit preliminary schedule defining planned operations for the first 60 days of Work, with a general outline for remainder of Work.

B. If preliminary schedule requires revision after review, submit revised schedule within 10 days, as directed by the District Inspector or Engineer.

C. Within 20 days after review of preliminary schedule, submit draft of proposed complete schedule for review.

1. Include written certification that major contractors have reviewed and accepted proposed schedule.

D. Within 10 days after joint review, submit complete schedule.

E. Submit updated schedule with each Application for Payment, as directed by the Inspector or Engineer.

F. Submit the number of opaque reproductions the Contractor requires, plus one copy which will be retained by Engineer.

G. Submit under transmittal letter form specified in Section 01300.

1.04 QUALITY ASSURANCE

A. Scheduler: Contractor 's personnel or specialist Consultant specializing in CPM scheduling with one years minimum experience in scheduling construction work of a complexity comparable to this Project, and having use of computer facilities capable of delivering a detailed graphic printout within 48 hours of request.

1.05 SCHEDULE FORMAT

A. Listings: In chronological order according to the start date for each activity. Identify each activity with the applicable specification section number.

B. Diagram Sheet Size: Maximum 22 x 17 inches or width required.

C. Sheet Size: Multiples of 8-1/2 x 11 inches.

D. Scale and Spacing: To allow for notations and revisions.

PART 2 PRODUCTS - NOT USED

PART 3 EXECUTION

3.01 PRELIMINARY SCHEDULE

A. Prepare preliminary schedule in the form of a horizontal bar chart.

3.02 CONTENT

A. Show complete sequence of construction by activity, with dates for beginning and completion of each element of construction.

B. Identify each item by specification section number.

C. Identify work of separate stages and other logically grouped activities.

D. Provide sub-schedules for each stage of Work identified in Section 01100.

E. Provide sub-schedules to define critical portions of the entire schedule.

F. Include conferences and meetings in schedule.

G. Show accumulated percentage of completion of each item, and total percentage of Work completed, as of the first day of each month.

H. Provide separate schedule of submittal dates for shop drawings, product data, and samples, owner-furnished products, Products identified under Allowances, and dates reviewed submittals will be required from Engineer. Indicate decision dates for selection of finishes.

I. Indicate delivery dates for owner-furnished products.

J. Coordinate content with schedule of values specified in Section 01200.

K. Provide legend for symbols and abbreviations used.

3.03 BAR CHARTS

A. Include a separate bar for each major portion of Work or operation.

B. Identify the first work day of each week.

3.04 REVIEW AND EVALUATION OF SCHEDULE

A. Participate in joint review and evaluation of schedule with Inspector or Engineer at each submittal.

B. Evaluate project status to determine work behind schedule and work ahead of schedule.

C. After review, revise as necessary as result of review, and resubmit within 10 days.

3.05 UPDATING SCHEDULE

A. Maintain schedules to record actual start and finish dates of completed activities.

B. Indicate progress of each activity to date of revision, with projected completion date of each activity.

C. Annotate diagrams to graphically depict current status of Work.

D. Identify activities modified since previous submittal, major changes in Work, and other identifiable changes.

E. Indicate changes required to maintain Date of Substantial Completion.

F. Submit reports required to support recommended changes.

G. Provide narrative report, as directed by the Inspector or Engineer, to define problem areas, anticipated delays, and impact on the schedule. Report corrective action taken or proposed and its effect including the effects of changes on schedules of separate contractors.

3.06 DISTRIBUTION OF SCHEDULE

A. Distribute copies of updated schedules to Contractor 's project site file, to Subcontractors, suppliers, Engineer, Owner, and other concerned parties.

B. Instruct recipients to promptly report, in writing, problems anticipated by projections shown in schedules.

END OF SECTION

SECTION 01400

QUALITY REQUIREMENTS

PART 1 GENERAL

1.01 SECTION INCLUDES

A. References and standards.

B. Quality assurance submittals.

C. Control of installation.

D. Tolerances.

E. Testing and inspection services.

F. Manufacturers' field services.

1.02 RELATED SECTIONS

A. Document 00300 - Information Available to Bidders: Soil investigation data.

B. Document 00700 - General Conditions: Inspections and approvals required by public authorities.

C. Section 01300 - Administrative Requirements: Submittal procedures.

D. Section 01600 - Product Requirements: Requirements for material and product quality.

1.03 REFERENCES

A. ASTM C 1077 - Standard Practice for Laboratories Testing Concrete and Concrete Aggregates for Use in Construction and Criteria for Laboratory Evaluation.

B. ASTM D 290 - Standard Practice for Bituminous Mixing Plant Inspection.

C. ASTM D 3740 - Standard Practice for Minimum Requirements for Agencies Engaged in the Testing and/or Inspection of Soil and Rock as Used in Engineering Design and Construction.

D. ASTM E 329 - Standard Specification for Agencies Engaged in the Testing and/or Inspection of Materials Used in Construction.

E. ASTM E 543 - Standard Practice for Agencies Performing Nondestructive Testing.

F. ASTM E 548 - Standard Guide for General Criteria used for Evaluating Laboratory Competence.

G. Use the latest edition of the above reference standards as of the date of the project.

1.04 SUBMITTALS

A. Testing Agency Qualifications:

1. Prior to start of Work, submit agency name, address, and telephone number, and names of full time registered Engineer and responsible officer.

2. Submit copy of report of laboratory facilities inspection made by Materials Reference Laboratory of National Bureau of Standards during most recent inspection, with memorandum of remedies of any deficiencies reported by the inspection.

B. Test Reports: After each test/inspection, promptly submit two copies of report to District Inspector or Engineer and to Contractor; within maximum of 24 hours.

1. Include:
   a. Date issued.
   b. Project title and number.
   c. Name of inspector.
   d. Date and time of sampling or inspection.
   e. Identification of product and specifications section.
   f. Location in the Project.
   g. Type of test/inspection.
   h. Date of test/inspection.
   i. Results of test/inspection.
   j. Conformance with Contract Documents.
   k. When requested by District Inspector or Engineer, provide interpretation of results.

2. Test reports are submitted for the Inspector or Engineer 's knowledge as contract administrator or for the Owner, for information for the limited purpose of assessing conformance with information given and the design concept expressed in the contract documents.

C. Certificates: When specified in individual specification sections, submit certification by the manufacturer and Contractor to Inspector or Engineer, in quantities specified for Product Data.

1. Indicate material or Product conforms to or exceeds specified requirements. Submit supporting reference data, affidavits, and certifications as appropriate.

2. Certificates may be recent or previous test results on material or Product, but must be acceptable to Inspector or Engineer.

D. Manufacturer's Instructions: When specified in individual specification sections, submit printed instructions for delivery, storage, assembly, installation, start-up, adjusting, and finishing, for the Owner 's information. Indicate special procedures, perimeter conditions requiring special attention, and special environmental criteria required for application or installation.

E. Manufacturer's Field Reports: Submit reports for the Inspector or Engineer 's benefit as contract administrator or for the Owner.

1. Submit for information for the limited purpose of assessing conformance with information given and the design concept expressed in the contract documents.

F. Erection Drawings: Submit drawings for the Inspector or Engineer 's benefit as contract administrator or for the Owner.

1. Submit for information for the limited purpose of assessing conformance with information given and the design concept expressed in the contract documents.

2. Data indicating inappropriate or unacceptable Work may be subject to action by the Inspector, Engineer or Owner.

1.05 REFERENCES AND STANDARDS

A. For products and workmanship specified by reference to a document or documents not included in the Project Manual, also referred to as reference standards, comply with requirements of the standard, except when more rigid requirements are specified or are required by applicable codes.

B. Conform to reference standard of date of issue current on date of Contract Documents, except where a specific date is established by applicable code.

C. Obtain copies of standards where required by product specification sections.

D. Maintain copy at project site during submittals, planning, and progress of the specific work, until Substantial Completion.

E. Should specified reference standards conflict with Contract Documents, request clarification from the Engineer before proceeding.

F. Neither the contractual relationships, duties, or responsibilities of the parties in Contract nor those of the Inspector or Engineer shall be altered from the Contract Documents by mention or inference otherwise in any reference document.

1.06 TESTING AND INSPECTION AGENCIES

A. Owner will employ and pay for services of an independent testing agency to perform specified testing. See Supplemental General Conditions for specified testing.

B. Contractor shall employ and pay for services of an independent testing agency to perform other specified testing. See Supplemental General Conditions for specified testing.

C. Employment of agency in no way relieves Contractor of obligation to perform Work in accordance with requirements of Contract Documents.

D. Contractor and Owner Employed Agency:

1. Testing agency: Comply with requirements of ASTM E 329, ASTM E 548, ASTM C 1093, ASTM E 543, ASTM C 1021, ASTM C 1077, ASTM C 1093, and ASTM C 1021.

2. Inspection agency: Comply with requirements of ASTM D290.

3. Laboratory: Authorized to operate in State in which Project is located.

4. Laboratory Staff: Maintain a full-time registered Engineer on staff to review services.

5. Testing Equipment: Calibrated at reasonable intervals with devices of an accuracy traceable to either National Bureau of Standards or accepted values of natural physical constants.

PART 2 PRODUCTS - NOT USED

PART 3 EXECUTION

3.01 CONTROL OF INSTALLATION

A. Monitor quality control over suppliers, manufacturers, Products, services, site conditions, and workmanship, to produce Work of specified quality.

B. Comply with manufacturers' instructions, including each step-in sequence.

C. Should manufacturers' instructions conflict with Contract Documents, request clarification from Engineer before proceeding.

D. Comply with specified standards as minimum quality for the Work except where more stringent tolerances, codes, or specified requirements indicate higher standards or more precise workmanship.

E. Have Work performed by persons qualified to produce required and specified quality.

F. Verify that field measurements are as indicated on shop drawings or as instructed by the manufacturer.

G. Secure products in place with positive anchorage devices designed and sized to withstand stresses,

vibration, physical distortion, and disfigurement.

3.02 TOLERANCES

A. Monitor fabrication and installation tolerance control of Products to produce acceptable Work. Do not permit tolerances to accumulate.

B. Comply with manufacturers' tolerances. Should manufacturers' tolerances conflict with Contract Documents, request clarification from Engineer before proceeding.

C. Adjust Products to appropriate dimensions; position before securing Products in place.

3.03 TESTING AND INSPECTION

A. See individual specification sections for testing required.

B. Testing Agency Duties:

1. Provide qualified personnel at site. Cooperate with Engineer and Contractor in performance of services.

2. Perform specified sampling and testing of Products in accordance with specified standards.

3. Ascertain compliance of materials and mixes with requirements of Contract Documents.

4. Promptly notify Inspector or Engineer and Contractor of observed irregularities or non conformance of Work or Products.

5. Perform additional tests and inspections required by Inspector or Engineer.

6. Attend preconstruction meetings and progress meetings, when requested.

7. Submit reports of all tests/inspections specified.

C. Limits on Testing/Inspection Agency Authority:

1. Agency may not release, revoke, alter, or enlarge on requirements of Contract Documents.

2. Agency may not approve or accept any portion of the Work.

3. Agency may not assume any duties of Contractor.

4. Agency has no authority to stop the Work.

D. Contractor Responsibilities:

1. Deliver to agency at designated location, adequate samples of materials proposed to be used which require testing, along with proposed mix designs.

2. Cooperate with laboratory personnel, and provide access to the Work.

3. Provide incidental labor and facilities:
   a. To provide access to Work to be tested/inspected.
   b. To obtain and handle samples at the site or at source of Products to be tested/inspected.
   c. To facilitate tests/inspections.
   d. To provide storage and curing of test samples.

4. Notify Inspector or Engineer and laboratory 24 hours prior to expected time for operations requiring testing/inspection services.

5. Employ services of an independent qualified testing laboratory and pay for additional samples, tests, and inspections required by Contractor beyond specified requirements.

6. Arrange with Owner 's agency and pay for additional samples, tests, and inspections required by Contractor beyond specified requirements.

E. Re-testing required because of non-conformance to specified requirements shall be performed by the same agency on instructions by the Inspector or Engineer. Payment for re-testing will be charged to the Contractor by deducting testing charges from the Contract Sum/Price.

3.04 MANUFACTURERS' FIELD SERVICES

A. When specified in individual specification sections, require material or Product suppliers or manufacturers to provide qualified staff personnel to observe site conditions, conditions of surfaces and installation, quality of workmanship, start-up of equipment, test, adjust and balance of equipment as applicable, and to initiate instructions when necessary.

B. Report observations and site decisions or instructions given to applicators or installers that are supplemental or contrary to manufacturers' written instructions.

3.05 DEFECT ASSESSMENT

A. Replace Work or portions of the Work not conforming to specified requirements.

B. If, in the opinion of the District Inspector or Engineer, it is not practical to remove and replace the Work, the District Inspector or Engineer will direct an appropriate remedy or adjust payment.

END OF SECTION

SECTION 01500

TEMPORARY FACILITIES AND CONTROLS

PART 1 GENERAL

1.01 SECTION INCLUDES

A. Temporary sanitary facilities.

B. Temporary Controls: Barriers, enclosures, and fencing.

C. Vehicular access and parking.

1.02 TEMPORARY SANITARY FACILITIES

A. Provide and maintain required chemical or marine type toilets of acceptable type. Provide at time of project mobilization.

B. Use of existing facilities is permitted, where acceptable to the owners of the facilities.

C. Maintain daily in clean and sanitary condition.

D. At end of construction, remove portable toilets completely.

1.03 BARRIERS

A. Provide sufficient barriers at all unsafe places at or near construction areas and to protect existing facilities and adjacent properties from damage from construction operations; in all cases maintain safe passageways through construction areas.

B. Provide protection for plants designated to remain. Replace damaged plants.

C. Protect non-owned vehicular traffic, stored materials, and structures from damage.

1.04 FENCING

A. Where required, provide temporary fences at construction areas to contain domestic animals.

B. After project work is completed, the temporary fences shall be totally removed.

1.05 VEHICULAR ACCESS AND PARKING

A. Coordinate access and haul routes with governing authorities and Owner.

B. Provide and maintain access to fire hydrants, free of obstructions.

C. Maintain at least one lane of traffic for local residences.

D. Provide and maintain access to adjacent businesses as directed.

E. Provide means of removing mud from vehicle wheels before entering streets.

F. Provide temporary parking areas to accommodate construction personnel.

1.06 REMOVAL OF UTILITIES, FACILITIES, AND CONTROLS

A. Remove temporary equipment, facilities, materials, prior to Substantial Completion inspection.

B. Remove underground installations to a minimum depth of 2 feet. Grade site as indicated.

C. Clean and repair damage caused by installation or use of temporary work.

D. Restore existing facilities used during construction to original condition. Restore permanent facilities used during construction to specified condition.

PART 2 PRODUCTS - NOT USED

PART 3 EXECUTION - NOT USED

END OF SECTION

SECTION 01560

SAFETY STANDARDS AND ACCIDENT PREVENTION

PART 1 GENERAL

1.01 SECTION INCLUDES

A. Safety Standards.

B. Accident Prevention.

1.02 DEFINITIONS

A. OSHA - Occupational Safety and Health Administration.

B. UOSHA - Utah Occupational Safety and Health Administration.

1.03 SUBMITTALS

A. See Section 01300 - Administrative Requirements, for submittal procedures.

B. Provide copy of OSHA 200 for past two years.

C. Provide copy of citation history from OSHA for past two years.

D. Provide copy of safety and health program.

1.04 SAFETY STANDARDS AND ACCIDENT PREVENTION

A. Health and safety, as well as environmental concerns, are given top priority by the Owner.

B. With respect to all work performed for this Contract, the Contractor shall:

1. Provide a safe and healthful work place in accordance with all federal, state and local regulations.

2. Conform to all rules and regulation of OSHA.

3. Immediately notify the OWNER of ANY accident or job-related illness that occurs on the job site.

4. Notify UOSHA of any serious accident within 12 hours of such occurrence, as required by the Utah Administrative Code R574-102 13.1.1.

5. Notify the OWNER of any sub-contractor retained to work on this project; and assure that they are informed of the Safety and Health Standards required by this Contract.

6. Provide the OWNER with a traffic plan for the work zone and buffer zone. Plan must be approved by U.D.O.T. where necessary.

PART 2 PRODUCTS - NOT USED

PART 3 EXECUTION - NOT USED

END OF SECTION

SECTION 01600

PRODUCT REQUIREMENTS

PART 1 GENERAL

1.01 SECTION INCLUDES

A. General product requirements.

B. Transportation, handling, storage and protection.

C. Product option requirements.

D. Substitution limitations and procedures.

1.02 RELATED SECTIONS

A. Document 00200 - Instructions to Bidders: Product options and substitution procedures prior to bid date.

B. Section 01400 - Quality Requirements: Product quality monitoring.

1.03 SUBMITTALS

A. Proposed Products List: Submit list of major products proposed for use, with name of manufacturer, trade name, and model number of each product.

1. Submit within 15 days after date of Agreement.

2. For products specified only by reference standards, list applicable reference standards.

B. Product Data Submittals: Submit manufacturer's standard published data. Mark each copy to identify applicable products, models, options, and other data. Supplement manufacturers' standard data to provide information specific to this Project.

C. Shop Drawing Submittals: Prepared specifically for this Project.

D. Provide written statement that materials and equipment being furnished are suitable and proper for the intended installations; that suppliers have investigated intended uses; and that items will satisfactorily perform and operate in the installations.

PART 2 PRODUCTS

2.01 PRODUCTS

A. Do not use materials and equipment removed from existing premises, except as specifically permitted by the Contract Documents.

B. Provide interchangeable components of the same manufacture for components being replaced.

2.02 PRODUCT OPTIONS

A. Products Specified by Reference Standards or by Description Only: Use any product meeting those standards or description.

B. Products Specified by Naming One or More Manufacturers: Use a product of one of the manufacturers named and meeting specifications, no options or substitutions allowed.

C. Products Specified by Naming One or More Manufacturers with a Provision for Substitutions: Submit a request for substitution for any manufacturer not named.

PART 3 EXECUTION

3.01 SUBSTITUTION PROCEDURES

A. Instructions to Bidders specify time restrictions for submitting requests for substitutions during the bidding period. Comply with requirements specified in this section.

B. Engineer will consider requests for substitutions only within 15 days after date of Agreement.

C. Substitutions may be considered when a product becomes unavailable through no fault of the Contractor.

D. Document each request with complete data substantiating compliance of proposed substitution with Contract Documents.

E. A request for substitution constitutes a representation that the submitter:

1. Has investigated proposed product and determined that it meets or exceeds the quality level of the specified product.

2. Will provide the same warranty for the substitution as for the specified product.

3. Will coordinate installation and make changes to other Work which may be required for the Work to be complete with no additional cost to Owner.

4. Waives claims for additional costs or time extension which may subsequently become apparent.

5. Will reimburse Owner and Engineer for review or redesign services associated with re-approval by authorities.

F. Substitutions will not be considered when they are indicated or implied on shop drawing or product data submittals, without separate written request, or when acceptance will require revision to the Contract Documents.

G. Substitution Submittal Procedure:

1. Submit three copies of request for substitution for consideration. Limit each request to one proposed substitution.

2. Submit shop drawings, product data, and certified test results attesting to the proposed product equivalence. Burden of proof is on proposer.

3. The Engineer will notify Contractor in writing of decision to accept or reject request.

3.02 TRANSPORTATION AND HANDLING

A. Transport and handle products in accordance with manufacturer's instructions.

B. Promptly inspect shipments to ensure that products comply with requirements, quantities are correct, and products are undamaged.

C. Provide equipment and personnel to handle products by methods to prevent soiling, disfigurement, or damage.

3.03 STORAGE AND PROTECTION

A. Store and protect products in accordance with manufacturers' instructions.

B. Store with seals and labels intact and legible.

C. Store sensitive products in weather tight, climate controlled, enclosures in an environment favorable to product.

D. For exterior storage of fabricated products, place on sloped supports above ground.

E. Cover products subject to deterioration with impervious sheet covering. Provide ventilation to prevent condensation and degradation of products.

F. Store loose granular materials on relatively solid, flat surfaces in a well-drained area. Prevent mixing with foreign matter.

G. Provide equipment and personnel to store products by methods to prevent soiling, disfigurement, or damage.

H. Arrange storage of products to permit access for inspection. Periodically inspect to verify products are undamaged and are maintained in acceptable condition.

END OF SECTION

SECTION 01700

EXECUTION REQUIREMENTS

PART 1 GENERAL

1.01 SECTION INCLUDES

A. Examination, preparation, and general installation procedures.

B. Surveying for laying out the work.

C. Cleaning and protection.

D. Closeout procedures, except payment procedures.

1.02 RELATED SECTIONS

A. Section 01300 - Administrative Requirements: Submittals procedures.

B. Section 01400 - Quality Requirements: Testing and inspection procedures.

C. Section 01500 - Temporary Facilities and Controls:

D. Section 01780 - Closeout Submittals: Project record documents, operation and maintenance data, warranties and bonds.

1.03 PROJECT CONDITIONS

A. Grade work areas to drain. Maintain excavations free of water. Provide, operate, and maintain pumping equipment.

B. Protect site from puddling or running water. Provide water barriers as required to protect site from soil erosion.

C. Ventilate enclosed areas to assist cure of materials, to dissipate humidity, and to prevent accumulation of dust, fumes, vapors, or gases.

D. Dust Control: Execute work by methods to minimize raising dust from construction operations. Provide positive means to prevent air-borne dust from dispersing into atmosphere.

E. Erosion and Sediment Control: Plan and execute construction by methods to control surface drainage from cuts and fills, from borrow and waste disposal areas. Prevent erosion and sedimentation.

1. Minimize amount of bare soil exposed at one time.

2. Provide temporary measures such as berms, dikes, and drains, to prevent water flow.

3. Construct fill and waste areas by selective placement to avoid erosive surface silts or clays.

4. Periodically inspect earthwork to detect evidence of erosion and sedimentation; promptly apply corrective measures.

F. Pollution Control: Provide methods, means, and facilities to prevent contamination of soil, water, and atmosphere from discharge of noxious, toxic substances, and pollutants produced by construction operations.

1.04 COORDINATION

A. Coordinate scheduling, submittals, and work of the various sections of the Project Manual to ensure efficient and orderly sequence of installation of interdependent construction elements, with provisions for accommodating items installed later.

B. Coordinate completion and clean-up of work of separate sections.

PART 2 PRODUCTS

2.01 PATCHING MATERIALS

A. New Materials: As specified in product sections; match existing products and work for patching and extending work.

B. Type and Quality of Existing Products: Determine by inspecting and testing products where necessary, referring to existing work as a standard.

C. Product Substitution: For any proposed change in materials, submit request for substitution described in Section 01600.

PART 3 EXECUTION

3.01 EXAMINATION

A. Verify that existing site conditions and substrate surfaces are acceptable for subsequent work. Beginning new work means acceptance of existing conditions.

B. Examine and verify specific conditions described in individual specification sections.

C. Prior to Cutting: Examine existing conditions prior to commencing work, including elements subject to damage or movement during cutting and patching. After uncovering existing work, assess conditions affecting performance of work. Beginning of cutting or patching means acceptance of existing conditions.

3.02 PREPARATION

A. Cut, move, or remove items as necessary for access to construction area. Replace and restore at completion where necessary.

B. Remove unsuitable material, such as brush, weeds, wood, metals, concrete and rocks. Load and haul removed materials and dispose of in an acceptable manner.

3.03 LAYING OUT THE WORK

A. Verify locations of survey control points prior to starting work.

B. Promptly notify District Inspector or Engineer of any discrepancies discovered.

C. Contractor shall locate and protect survey control and reference points.

D. Control datum for survey is that established by Owner provided survey.

E. Protect survey control points prior to starting site work; preserve permanent reference points during construction.

F. Promptly report to District Inspector or Engineer the loss or destruction of any reference point or relocation required because of changes in grades or other reasons.

G. Owner's surveyors will replace dislocated survey control points based on original survey control. Make no changes without prior written notice to Engineer.

H. Utilize recognized engineering survey practices.

I. Establish elevations, lines, grades and elevations. Locate and lay out by instrumentation and similar appropriate means.

J. Periodically verify layouts by same means.

K. Maintain a complete and accurate log of control and survey work as it progresses.

3.04 GENERAL INSTALLATION REQUIREMENTS

A. Install Products as specified in individual sections.

3.05 PROGRESS CLEANING

A. Maintain construction areas free of waste materials, debris, and rubbish. Maintain site in a clean and orderly condition.

B. Remove debris and rubbish from pipes and other closed spaces, prior to enclosing the space.

C. Collect and remove waste materials, debris, and rubbish from site periodically and dispose off-site.

3.06 PROTECTION OF INSTALLED WORK

A. Protect installed work and provide special protection where specified in individual specification sections.

B. Provide temporary and removable protection for installed Products. Control activity in immediate work area to prevent damage.

C. Prohibit traffic from landscaped areas.

3.07 FINAL CLEANING

A. Execute final cleaning prior to final project assessment.

B. Clean site; sweep paved areas, rake clean landscaped surfaces.

C. Remove waste and surplus materials, rubbish, and construction facilities from the site.

3.08 CLOSEOUT PROCEDURES

A. Make submittals that are required by governing or other authorities.

1. Provide copies to Engineer and Owner.

B. Accompany Project Coordinator on preliminary inspection to determine items to be listed for completion or correction in Contractor's Notice of Substantial Completion.

C. Notify District Inspector or Engineer when work is considered ready for Substantial Completion.

D. Submit written certification that Contract Documents have been reviewed, work has been inspected, and that work is complete in accordance with Contract Documents and ready for Engineer's review.

E. Correct items of work listed in executed Certificates of Substantial Completion and comply with requirements for access to Owner-occupied areas.

F. Accompany Project Coordinator on preliminary final inspection.

G. Notify Inspector or Engineer when work is considered finally complete.

H. Complete items of work determined by Inspector or Engineer's final inspection.

END OF SECTION

SECTION 01780

CLOSEOUT SUBMITTALS

PART 1 GENERAL

1.01 SECTION INCLUDES

A. Project Record Documents.

B. Warranties and bonds.

1.02 RELATED SECTIONS

A. Conditions of the Contract: Performance bond and labor and material payment bonds, warranty, and correction of work.

B. Section 01300 - Administrative Requirements: Submittals procedures, shop drawings, product data, and samples.

C. Section 01700 - Execution Requirements: Contract closeout procedures.

D. Individual Product Sections: Specific requirements for operation and maintenance data.

E. Individual Product Sections: Warranties required for specific products or Work.

F. Section 01785 - Project Evaluation.

1.03 SUBMITTALS

A. Project Record Documents: Submit documents to Engineer with claim for final Application for Payment.

B. Warranties and Bonds:

1. For equipment or component parts of equipment put into service during construction with Owner 's permission, submit documents within ten days after acceptance.

2. Make other submittals within ten days after Date of Substantial Completion, prior to final Application for Payment.

3. For items of Work for which acceptance is delayed beyond Date of Substantial Completion, submit within ten days after acceptance, listing the date of acceptance as the beginning of the warranty period.

C. Project Evaluation: Submit form to Engineer with claim for final Application for Payment.

PART 2 PRODUCTS - NOT USED

PART 3 EXECUTION

3.01 PROJECT RECORD DOCUMENTS

A. Maintain on site one set of the following record documents; record actual revisions to the Work:

1. Drawings.

2. Specifications.

3. Addenda.

4. Change Orders and other modifications to the Contract.

B. Ensure entries are complete and accurate, enabling future reference by Owner.

C. Store record documents separate from documents used for construction.

D. Record information concurrent with construction progress.

E. Specifications: Legibly mark and record at each product section description of actual products installed, including the following:

1. Manufacturer's name and product model and number.

2. Changes made by Addenda and modifications.

F. Record Drawings: Legibly mark each item to record actual construction including:

1. Measured depths of foundations in relation to finish main floor datum.

2. Measured depths of manholes in relation to rim elevation.

3. Measured horizontal and vertical locations of underground utilities and appurtenances, referenced to permanent surface improvements.

4. Field changes of dimension and detail.

5. Details not on original Contract drawings.

3.02 WARRANTIES AND BONDS

A. Obtain warranties and bonds, executed in duplicate by responsible Subcontractors, suppliers, and manufacturers, within ten days after completion of the applicable item of work. Except for items put into use with Owner's permission, leave date of beginning of time of warranty until the Date of Substantial completion is determined.

B. Verify that documents are in proper form, contain full information, and are notarized.

C. Co-execute submittals when required.

D. Retain warranties and bonds until time specified for submittal.

3.03 PROJECT EVALUATION FORM

A. See Section 01785 - PROJECT EVALUATION.

B. Complete all items on the Project Evaluation Form and submit with final Application for Payment.

C. Owner and Engineer shall also each complete the Project Evaluation form; which will be included with the Project file for use in future evaluation of the Contractor.

END OF SECTION

SECTION 01785

PROJECT EVALUATION

PART 1 GENERAL

1.01 SECTION INCLUDES

A. Project Evaluation Document.

1.02 RELATED SECTIONS

A. Section 01780 - Closeout Submittals.

1.03 SUBMITTALS

A. Project Evaluation: Document must be submitted to Engineer with claim for final Application for Payment.

1.04 PROJECT EVALUATION

A. Project to be evaluated by the Owner, Engineer and Contractor.

B. Project evaluation by Owner and Engineer will be used to rate the Contractor's performance; which will be used to determine Contractor's qualification for future projects with the Owner.

C. Evaluation shall be done on a five-point system; with 5 being excellent, 1 being poor and N/A for items which do not apply.

D. The following areas are to be evaluated.

E. Contract: How well was the Contract followed.

1. Time: _____.
2. Materials: _____.
3. Pricing: _____.
4. Bid: _____.
5. Change Orders: _____.
6. Warranties: _____.

F. Quality of Work.

1. Workmanship: _____.
2. Materials: _____.
3. Equipment Used: _____.

G. Quality of Materials.

1. Storage on Site: _____.
2. Care to Prevent Damage: _____.

H. Red-Line Drawings.

1. Provided: _____.

2. Quantity: _____.

3. On Time: _____.

I. Working Relationships.

1. Owner's Engineer: _____.

2. Owner's Employees: _____.

3. General Public: _____.

4. Property Owners: _____.

J. Contractor's Performance on Previous Projects with Owner.

1. Owner: _____.

2. Engineer: _____.

K. COMMENTS: _____
_____
_____
_____
_____
_____

END OF SECTION

DIVISION 02

PROJECT CONSTRUCTION

SECTION 02100

MEASUREMENT AND PAYMENT

PART 1 GENERAL

1.01 SECTION INCLUDES

A. Measurement and payment for:

1. Mobilization and erosion control.
2. Investigative Potholes
3. General excavation for site and structural earthwork for water tank.
4. Rock excavation.
5. Furnish and place membrane below tank.
6. Furnish, place, and compact gravel base for tank.
7. Furnishing and installing 12-inch, 10-inch and 6-inch ductile iron pipe and fittings for tank pipe lines.
8. Furnishing and installing 12-inch, 6-inch and 3-inch plastic pipe and fittings for tank drain lines.
9. Constructing reinforced concrete valve vault for tank, with drain system.
10. Constructing reinforced concrete water storage tank.
11. Plumbing systems for water tank and valve vault.
12. Electrical systems for water tank and valve vault.
13. SCADA systems for water tank and valve vault.
14. Furnishing and installing pre-cast concrete drain boxes.
15. Furnish and place landscaping rock (boulders).
16. Constructing reinforced concrete headwall for tank drain.
17. Furnishing and placing erosion control mat and native grass seeding.

1.02 RELATED SECTIONS

A. See appropriate sections of the Contract Documents for criteria applicable to Work performed under a unit price or lump sum price payment method.

1.03 MEASUREMENT AND PAYMENT

A. Measurement shall be made in units or lump sums, as described below.

B. Payment shall be made at the unit price or lump sum price bid in the bid schedule for the items described below; which shall be payment in full for all costs of furnishing labor, tools, equipment, materials, testing, etc., to complete the items of work as specified and as indicated on the drawings.

C. Bid items shown with letter and number, indicating schedule and item number.

D. Mobilization (Bid Item No. 6.1):

1. Basis for Measurement: Lump sum.

2. Basis for Payment: Includes all preparatory work and operations, such as movement of personnel, supplies and incidental items to the project site; establishment of offices and other facilities necessary for work on the project; furnishing, erecting and maintaining construction signs and barricades; and all other work and operations which must be performed or costs incurred prior to beginning work on the project.
   a. Payment shall also include all costs for de-mobilization, as required, after the project has been completed.

E. Erosion Control (Bid Item No. 6.2):

1. Basis for Measurement: Lump Sum.

2. Basis for Payment: Includes furnishing, erecting and maintaining erosion control facilities during project construction, including silt fences and all appurtenant work required for erosion control.
   a. Payment shall also include all costs for removing erosion control facilities, as required and as directed, after the project has been completed.

F. General Earthwork for Water Tank Site (Bid Item No. 6.3):

1. Basis of Measurement: Lump sum.

2. Basis for Payment: Includes:
   a. Clearing and grubbing the work areas for the water tank site, as required, to remove existing top soil, vegetation, rubbish, debris and related items; separating unacceptable removed material from acceptable removed material, as indicated and as directed; placing acceptable removed materials in stockpile if it is to be re-used; separately stockpiling excess and unsuitable removed material from the work areas and spreading of the excess material in an acceptable manner at the project site following completion of tank construction; and all appurtenant work.
   b. General earthwork for the tank site, including excavating and grading, to the limits as indicated on drawings and as directed by the Project Engineer; separating acceptable, excess and unsuitable excavated materials, as directed; placing acceptable excavated materials in stockpile if it is to be re-used in tank construction and embankments; placing suitable excess material in stockpiles on site, separately stockpiling excess and unsuitable removed material from the work areas and spreading of the excess material in an acceptable manner at the project site following completion of tank construction; and all appurtenant work.
   c. Constructing embankments for tank and site work, including scarifying embankment sub-grades to the required depths, and grading and compacting sub-grades to required densities; placing stock-piled embankment material to the limits as indicated on drawings and as directed by the City Engineer; shaping and grading the embankment material, as indicated and as directed; compacting embankment material to the required densities; and all appurtenant work.
   d. Payment shall include all de-watering, as required and as described in these specifications.
   e. Payment shall also include costs for providing temporary facilities to divert existing flow of storm water around areas of construction, as required; maintaining flow of diverted water until construction of pond has been completed, including testing; and removal of diversion facilities after the work is completed.
   f. Payment shall also include costs for restoring the staging areas as required and as directed.

G. Investigative Pothole (Bid Item No. 6.4):

1. Basis for Measurement: By the unit for each investigative pothole actually completed.

2. Basis for Payment: shall constitute full compensation for saw cutting, demolition, removal and disposal of old asphalt, road base and waste materials, dewatering trench, excavation regardless of depth, measuring depth to utility, investigation and documentation of conditions, furnishing and placing backfill material and untreated base course, compaction, surface restoration, or any other appurtenant

items of work for which separate payment is not otherwise specifically provided in the Bid Sheets.

H. Structural Earthwork for Water Tank (Bid Item No. 6.5):

1. Basis of Measurement: Lump sum.

2. Basis for Payment: Includes all required structural earthwork for water storage tank, including excavating and grading, to the limits as indicated on drawings and as directed by the City Engineer; separating acceptable, excess and unsuitable materials, as directed; placing acceptable excavated materials in stockpile if it is to be re-used in tank construction and embankments; placing suitable excess material in stockpiles on site, separately stockpiling excess and unsuitable removed material from the work areas and spreading of the excess material in an acceptable manner at the project site following completion of tank construction; and all appurtenant work.
   a. Payment shall include all de-watering, as required and as described in these specifications.
   b. Payment shall also include costs for providing temporary facilities to divert existing flow of storm water around areas of construction, as required; maintaining flow of diverted water until construction has been completed, including testing; and removal of diversion facilities after the work is completed.
   c. Estimated quantity of native material to be excavated is 3,400 CY of which suitable soil may be re-used in tank construction and excess material may be spread in an acceptable manner at project site.

J. Rock Excavation for Tank (Bid Item No. 6.6):

1. Basis of Measurement: By the cubic yard of rock material actually excavated.

2. Basis for Payment: Includes all required rock excavation by acceptable methods, including rock splitting, jack-hammering or other methods, as required and as directed, to remove large boulders and other difficult material from the pond area, to the limits as directed by the Engineer; loading and disposing of rock material in an acceptable manner, as directed; and all appurtenant work.

K. Gravel Base Material for Water Tank (Bid Item No. 6.7):

1. Basis for Measurement: By the cubic yard of material actually placed and compacted.

2. Basis for Payment: Includes supplying gravel material; stockpiling material as required; placing, grading and compacting gravel base material, as indicated and as directed; and all appurtenant work.
   a. Gravel material placed outside the limits for water tank base, as indicated on the drawings, as described herein, and as directed by the Project Engineer, shall be at the Contractor's expense; with no additional cost to the Owner.

L. Furnish and Place Membrane Under Base of Water Tank (Bid Item No. 6.8):

1. Basis for Measurement: By the square foot of material actually placed.

2. Basis for Payment: Includes supplying membrane material of type and thickness specified on plan, sand base material; stockpiling material as required; placing, grading and compacting sand base material, as indicated and as directed; and all appurtenant work.
   a. Membrane and sand material placed outside the limits for water tank base, as indicated on the drawings and specifications, as described herein, and as directed by the Project Engineer, shall be at the Contractor's expense; with no additional cost to the Owner.

M. Ductile Iron Pipe and Fittings (Bid Items No. 6.9, 6.10 and 6.11):

1. Basis for Measurement: By the linear foot of pipe actually installed.

2. Basis for Payment: Includes excavating trenches to required elevations; loading and placing excavated materials in stockpile if it is to be re-used; removing excess and unsuitable material from site and

disposing of material in an acceptable manner; supplying pipe bedding material; backfilling, compacting and shaping pipe bedding material in pipe zone; stockpiling and placing acceptable native backfill/borrow material, as indicated and as directed, backfilling trenches above pipe zone to required elevations; compacting all trench backfill material to required densities; furnishing and installing ductile iron pipe and fittings of the size and type indicated in the bid schedule and as shown on the drawings; and all appurtenant work to complete installation of pipe.

a. Payment shall include all de-watering, as required and as described in these specifications.

b. Payment shall include all cost of all required earthwork; furnishing and placing concrete for thrust blocks, as required and as directed; furnishing and placing reinforcement, as required and as directed; and all appurtenant work.

c. Payment shall also include costs for providing temporary facilities to divert existing flow of storm water around areas of construction, as required; maintaining flow of diverted water until construction of pipe lines has been completed, including testing; and removal of diversion facilities after the work is completed.

N. Plastic Pipe and Fittings for Tank Drain and Underdrain Pipe Lines (Bid Items No. 6.12, 6.13 and 6.14):

1. Basis for Measurement: By the linear foot of pipe actually installed.

2. Basis for Payment: Includes excavating trenches to required elevations; loading and placing excavated materials in stockpile if it is to be re-used; removing excess and unsuitable material from site and disposing of material in an acceptable manner; supplying pipe bedding material; backfilling, compacting and shaping pipe bedding material in pipe zone; stockpiling and placing acceptable native backfill/borrow material, as indicated and as directed, backfilling trenches above pipe zone to required elevations; compacting all trench backfill material to required densities; furnishing and installing HDPE AND/OR PVC pipe and fittings of the size and type indicated in the bid schedule and as shown on the drawings; and all appurtenant work to complete installation of pipe.

a. Payment shall include all de-watering, as required and as described in these specifications.

b. Payment shall also include costs for providing temporary facilities to divert existing flow of storm water around areas of construction, as required; maintaining flow of diverted water until construction of pipe lines has been completed, including testing; and removal of diversion facilities after the work is completed.

O. Construct Concrete Valve Vault (Bid Item No. 6.15):

1. Basis of Measurement: Lump Sum.

2. Basis of Payment: Includes all required earthwork, to include structural excavation, gravel base, backfill around structure, and compaction of backfill; constructing reinforced concrete vault, including concrete work, ladder with cage, access hatch, miscellaneous metal work, and all appurtenant items; furnishing and installing ventilating system, including duct work, exhaust fan, ventilators, complete the waterproofing of the vault, complete the painting in the vault, and all appurtenant items; and all appurtenant work to complete the valve vault.

P. Construct Reinforced Concrete Water Storage Tank (Bid Item No. 6.16):

1. Basis of Measurement: Lump Sum.

2. Basis of Payment: Includes all costs for constructing a reinforced concrete water storage tank, of the size indicated on the drawings; to include all required concrete work, concrete, reinforcement, water-stops, furnishing and installing all required miscellaneous metal work, complete the waterproofing of the water tank, complete the painting in the water tank, and all appurtenant work, as indicated on the drawings and as directed by the Project Engineer, to complete construction of tank.

Q. Plumbing System in Water Tank (Bid Item No. 6.17):

1. Basis of Measurement: Lump Sum.

2. Basis of Payment: Includes cost of furnishing and installing plumbing systems, complete, in the water tank, to include pipe, fittings, supports and all appurtenant work, to complete the system, as indicated on the drawings and as directed by the Engineer.

R. Plumbing System in Valve Vault (Bid Item No. 6.18):

1. Basis of Measurement: Lump Sum.

2. Basis of Payment: Includes cost of furnishing and installing plumbing system, complete, in the valve vault, to include valves, pipe, fittings, and all appurtenant work, to complete the system, as indicated on the drawings and as directed by the Engineer.

S. Electrical Systems in Concrete Water Tank and Valve Vault (Bid Item No. 6.19):

1. Basis of Measurement: Lump Sum.

2. Basis of Payment: Includes cost of furnishing and installing electrical systems and all appurtenant work, to complete the electrical systems in the water tank and valve vault, as indicated on the drawings and as directed by the Engineer.

T. SCADA Systems in Concrete Water Tank and Valve Vault (Bid Item No. 6.20):

1. Basis of Measurement: Lump Sum.

2. Basis of Payment: Includes cost of furnishing and installing components for SCADA systems and all appurtenant work, to provide provisions the SCADA systems in the water tank and valve vault, as indicated on the drawings and as directed by the Engineer.

U. Furnish and Install Electrical Conductors in Underground Conduits (Bid Item No. 6.21, 6.22, and 6.27):

1. Basis of Measurement: By the linear foot of each electrical conductor actually installed.

2. Basis for Payment: Includes furnishing and installing parallel electrical conductors and appurtenant items, of the size and type indicated, in installed PVC conduits as shown; and all appurtenant work.
   a. Payment shall be made for each conductor installed.

V. Furnish and Install Electrical Junction (Pull) Boxes (Bid Item No. 6.23):

1. Basis for Measurement: By the unit of each box actually installed.

2. Basis for Payment: Includes all required earthwork, to include excavation, backfilling, and compacting backfill material; furnishing and placing gravel bedding material; furnishing and installing electrical junction boxes, as indicated and as directed; and all appurtenant work.

W. Construct Electrical Power Pedestal (Bid Item No. 6.24):

1. Basis for Measurement: Lump Sum.

2. Basis for Payment: Includes all required earthwork, to include excavating for conduits and cable, structural excavating for concrete work, backfilling excavations, and compacting backfill material; constructing reinforced concrete pad, as indicated; constructing power pedestal, to include switches, enclosures, breaker panel, and all appurtenant items; electrical work for connecting to project electrical system, include conduit, wires, pull box, and all appurtenant items; and all appurtenant work to complete pedestal.

X. Connect New Electrical System to Existing RMP System (Bid Item No. 6.25):

1. Basis for Measurement: Lump Sum.

2. Basis for Payment: Includes all required earthwork, to include excavating for conduits and cable, structural excavating for concrete work, backfilling excavations, and compacting backfill material; constructing reinforced concrete pad, as indicated; furnishing and installing meter pedestal, to include meter, switches, enclosures, and all appurtenant items; furnishing and installing electrical work for connection, complete, from existing Rocky Mountain power transformers to new meters, to including

conduit, wires, pull boxes, and all appurtenant items; connecting new electrical system to existing Rocky Mountain power system, as indicated and as directed; and all appurtenant work to complete connection.

a. Connection to existing power transformer shall be done under the direct supervision of Rocky Mountain Power.

Y. Construct SCADA System Pedestal (Bid Item No. 6.25):

1. Basis for Measurement: Lump Sum.

2. Basis for Payment: Includes all required earthwork, to include excavating for conduits and cable, structural excavating for concrete work, backfilling excavations, and compacting backfill material; constructing reinforced concrete pad, as indicated; constructing SCADA pedestal, to include switches, enclosures, breaker panel, and all appurtenant items; electrical work for connecting to project electrical system, include conduit, wires, pull box, and all appurtenant items; and all appurtenant work to complete pedestal.

Z. Construct Concrete Drain Boxes (Bid Item 6.28):

1. Basis for Measurement: By the unit of each box constructed.

2. Basis for Payment: Includes all required earthwork, to include excavating for structure, backfilling excavations, and compacting backfill; furnishing, placing, and compacting gravel base, to the thickness indicated; constructing concrete catch box/basin, as indicated and as directed, including precast concrete box, frame and grate, and all appurtenances; forming and sealing pipe inlets and outlets, as directed by the Engineer; connecting new pipe to new box with appropriate type couplings and grouting around new pipe, as directed; and all appurtenant work.

AA. Connect New 12” Drain Line to Existing Drain Box (Bid Schedule Item 6.29):

1. Basis for Measurement: Measurement for connection to existing spring collection system shall be made and included in the unit price or lump sum price bid for the item of work that requires connecting to existing drain box.

2. Basis for Payment: Includes all required earthwork, to include excavating for spring collection line connection, backfilling excavations, and compacting backfill material; core cut existing concrete structure and all appurtenant items; furnishing and installing pipe, fittings, and all appurtenant items, of the type and size indicated; and all appurtenant work to complete the drain system.

AB. Furnish and Place Landscaping Rock (Bid Item 6.30):

1. Basis for Measurement: By the square foot of landscaping rock actually placed.

2. Basis for Payment: Includes all required earthwork, including excavating for landscaping, grading, backfilling, and compacting backfill material; fine grading and compacting substrate surfaces; furnishing and placing two layers of fabric over areas to be landscaped; supplying rock material; placing rock landscaping material as required and as directed; and all appurtenant work required to complete the rock landscaping.

3. Rock material placed outside the limits for landscaping, as indicated on the drawings, as described herein, and as directed by the Engineer, shall be at the Contractor's expense; with no additional cost to the Owner.

AC. Construct Reinforced Concrete Headwall Structure (Bid Item No. 6.31):

1. Basis of Measurement: Lump Sum.

2. Basis of Payment: Includes all costs for constructing a reinforced concrete water storage tank, of the size indicated on the drawings; to include all required concrete work, concrete, reinforcement, water-stops, furnishing and installing all required miscellaneous metal work, complete the waterproofing of the water tank, complete the painting in the water tank, and all appurtenant work, as indicated on the drawings and as directed by the Project Engineer, to complete construction of tank.

AD. Erosion Control Mat and Native Grass Seeding (Bid Item No. 6.32):

1. Basis for Measurement: By the square foot of erosion control mat and seeding actually placed.

2. Basis for Payment: Includes supplying seed; preparing seedbeds on surfaces of cuts and exterior embankment slopes; placing seed, where indicated and as directed by the City Engineer; furnishing and placing erosion control mat, where indicated on the drawings and as directed by the City Engineer; and all appurtenant work.
   a. Erosion control mat and seeding placed outside the limits as indicated on the drawings, as described herein, and as directed by the City Engineer, shall be at the Contractor's expense; with no additional cost to the Owner.

AE. Native Grass Seeding (Bid Item No. 6.33):

1. Basis for Measurement: By the acre of seed actually placed.
2. Basis for Payment: Includes supplying native grass seed; preparing seedbed; placing seed, were indicated and as directed by the City Engineer; and all appurtenant work.
   a. Seeding placed outside the limits as indicated and as directed shall be at the Contractor’s expense; with no additional cost to the Owner.

PART 2 PRODUCTS - NOT USED

PART 3 EXECUTION - NOT USED

END OF SECTION

SECTION 02300

GENERAL AND ROADWAY EARTHWORK

PART 1 GENERAL

1.01 SECTION INCLUDES

A. Excavating for concrete culinary water storage tank, as indicated on the drawings.

1. Separating acceptable, excess and unsuitable materials; stockpiling acceptable and suitable materials; and removing and disposing of unsuitable materials.

2. Compacting materials, as required.

B. Construction temporary protection system for surrounding houses and appurtenant items.

C. Constructing embankments for water tank and roadways, as indicated and as directed.

D. Removing top soil material; and stockpiling material on-site.

E. Finish grading.

F. Erosion control.

G. Dust control.

1.02 RELATED SECTIONS

A. Section 01300 - Administrative Requirements.

B. Section 02312 - Trenching for Pipe Work: trenching and backfilling for pipe work.

C. Section 02315 - Structural Excavation: Building and foundation excavating.

D. Section 02316 - Fill and Backfill: Backfilling for project pipe lines and at structures.

E. Section 02318 - Rock Removal.

F. Section 02923 - Native Grass Planting.

1.03 MEASUREMENT AND PAYMENT

A. See Section 02100 - Measurement and Payment.

1.04 SUBMITTALS

A. See appropriate sections of the Contract Documents for submittal procedures.

B. Samples, where required by the Engineer: 10-pound sample of each type of fill; submit to testing laboratory as directed by the laboratory.

C. Materials Sources: Submit name of imported materials source.

D. Fill Composition Test Reports: Results of laboratory tests on proposed and actual materials used.

E. Compaction Density Test Reports.

F. Project Record Documents: Accurately record actual locations of utilities remaining by horizontal dimensions, elevations or inverts, and slope gradients.

1.05 QUALITY ASSURANCE

A. Perform work in accordance with these project specifications and with the District standards.

1. Maintain one copy of standards on job site.

B. Testing shall be done according to the appropriate sections of the Contract Documents.

1.06 PROJECT CONDITIONS

A. Protect above-grade and below-grade utilities that remain.

B. Protect landscaping and natural vegetation adjacent to work areas, from excavating equipment and vehicular traffic.

C. Protect bench marks, survey control points, existing structures, fences, sidewalks, paving, and curbs from excavating equipment and vehicular traffic.

PART 2 PRODUCTS

2.01 FILL MATERIALS

A. See Section 02316 - Fill and Backfill.

2.02 EROSION CONTROL MAT

A. Erosion Control mat shall be a double net, straw and coconut mat.

1. Mat shall contain 70 percent straw fiber and 30 percent coconut fiber; and shall weigh at least 0.7 pounds per square foot.

2. Top netting shall be heavy weight photodegradable netting; and the bottom netting shall be medium weight photodegradable netting.

3. Mat shall be sewn on 2-inch centers.

4. Mat shall be Model CFS072R Double Net Straw / Coconut Erosion Control Mat, or acceptable equal.

B. Native Seed. Native grass seed shall be as specified in Section 02923.

PART 3 EXECUTION

3.01 PREPARATION

A. Identify required lines, levels, contours, and datum locations.

B. Locate, identify, and protect utilities that remain and protect from damage.

C. Notify utility company to remove and relocate utilities, where and as required.

D. Verify that survey bench mark and intended elevations for the Work are as indicated.

3.02 CLEARING AND GRUBBING

A. All areas of the project work indicated to be excavated or filled shall be first cleared and grubbed of vegetation, brush, weeds, rubbish and loose boulders.

B. All cleared and grubbed material shall be removed from the work site and disposed of in an acceptable

manner.

C. The area where excess excavated material is to be placed shall be cleared and grubbed to a depth of at least 6-inches; and the cleared and grubbed material shall be placed where indicated and as directed.

3.03 EXCAVATING

A. Remove topsoil from areas to be further excavated and filled, to the depth and limits as indicated on the drawings and as directed by the District Inspector, without mixing with foreign materials.

B. Do not remove topsoil material when wet.

C. Excavate as required to remove collapsible soils from under the water tank footprint, as required and as directed by the Geotechnical Engineer.

D. Excavate for the water tank to the lines, grades and cross-sections as indicated on the drawings and as directed by the District Inspector.

E. Notify District Inspector of unexpected subsurface conditions and discontinue affected Work in area until notified to resume work.

F. All excavation shall be done according to OSHA Standards and other applicable regulations.

G. Excavation and grading operations shall be conducted in such a manner so as to cause minimum inconvenience to adjacent property, including dust control.

H. Surfaces of excavated areas shall be maintained reasonable smooth at all times to ensure proper drainage. If existing drainage is interrupted, provide temporary facilities to re-route and maintain drainage.

1. Temporary drainage facilities shall be considered incidental to work involved; and shall be removed after work is completed.

I. After stripping, excavating and grading has been completed to achieve design grades, the subgrade shall be proof-rolled to a firm, non-yielding surface. Soft areas detected during the proof-rolling shall be removed and replaced with granular fill material (Fill Type III), as required and as directed by the District Inspector.

J. When unsuitable material is encountered in excavated areas at sub-grade elevations, excavate as required to remove unsuitable material and backfill areas with selected backfill material.

K. Remove large rocks and boulders encountered at sub-grade elevations to a depth of not less than 6-inches below sub-grade, and fill and compact excavation with suitable material. See Section 02318 for procedures for removing large rock.

L. Remove unacceptable and excess excavated material from site and dispose of in an acceptable manner.

M. See Section 02316 for backfilling and filling procedures.

N. Benching Slopes: Horizontally bench existing slopes greater than 1:4 (Vertical: Horizontal) to key fill material to slope for firm bearing. Benches shall have at least one foot step and graded to drain.

O. Stability: Replace damaged or displaced subsoil to same requirements as for specified fill.

P. During construction, provide and maintain sufficient means and devices to promptly remove and properly dispose of all water entering excavations or other parts of the work.

1. Dispose of water from work area in an acceptable manner, without damage to adjacent property.

2. No pipe, concrete footings, foundations or floors shall be installed in water.

3. Water shall not be allowed to rise over concrete until it has set for at least 24 hours.

4. Water shall not be allowed to rise against walls and supporting beams for a period of 14 days after completion of walls and beams.

5. Any damage to pipe work or concrete work caused by water shall be repaired by the Contractor, at his expense.

Q. The use of explosives will not be allowed.

3.04 SOIL REMOVAL

A. Segregate excavated material at time of excavation into topsoil material, acceptable material, and unsuitable material, as determined by the District Inspector.

B. Stockpile topsoil material to be re-used on site, as directed by the District Inspector.

C. Stockpile acceptable subsoil to be re-used on site, as directed by the District Inspector.

D. Stockpile acceptable excess subsoil on site, as directed by the District Inspector.

E. Load and remove unacceptable materials from the site and dispose of in an acceptable manner.

F. Stockpile materials separately in areas designated on site, within 200 feet of point of excavation; pile depth not to exceed ten feet and protect from erosion.

3.05 EMBANKMENTS, BACKFILLING AND FILLING

A. Remove all vegetation, debris, unsuitable soil materials, obstructions and deleterious materials from designated areas prior to placement of embankments, backfills or fills.

B. Where existing ground surfaces have density less than that specified for particular areas, scarify areas to required depth, pulverize existing material, moisture-condition to optimum moisture content and compact to required percentage of maximum density.

C. Construct embankments as indicated on the drawings and as directed by the District Inspector. Embankments may be constructed of the native silty gravels and sands excavated from the site, as directed and approved by the Geotechnical Engineer and District Inspector.

D. Place material in piles or windrows; then spread evenly in homogeneous, uniformly mixed layers.

E. Place embankments, backfill and fill material in continuous horizontal layers of not more than 8-inches, loose depth, over the entire width of embankments areas; including backfill and fill areas. Moisture-control each layer of material to provide moisture content within 2 percent of optimum moisture content; but keep moist enough at all times to provide dust control.

F. Any opening or discontinuities through embankments or fills must be approved by the District Inspector; and will require 5 horizontals to 1 vertical side slopes.

G. Moisture control material in borrow areas or stock-piles to ensure good conditioning.

H. Compact each layer to 95 percent of maximum dry density as per ASTM D 698.

I. Each lift shall be properly scarified for a maximum depth of 2 inches and moisture controlled before placement of another lift, as directed by the District Inspector.

J. Do not place material that is muddy, frozen or contains frost or ice.

K. Do not place embankments, backfill or fill material on surfaces that are muddy, frozen or contain frost or ice.

L. See Section 02316 for backfilling and filling procedures.

M. Surfaces of fill areas shall be properly cross graded at all times to ensure proper drainage. If existing drainage is interrupted, provide temporary facilities to re-route and maintain drainage.

1. Temporary drainage facilities shall be considered incidental to work involved; and shall be removed after work is completed.

N. Correct areas that are over-excavated.

1. Use structural fill, flush to required elevation, compacted to minimum 96 percent of maximum dry density.

3.06 COMPACTING

A. Compact embankments, backfill and fill material to provide not less than the following percentages of maximum density for each area classification:

1. Embankments: Compact each layer of backfill or fill material to 95 percent of maximum dry density.

2. Non-Landscaped Unpaved Areas: Compact each layer of backfill or fill material to 90 percent of maximum dry density.

B. Moisture Control. Before compaction, moisture control sub-grades or layers of backfill and fill material, as required, to achieve optimum moisture content of material.

1. The application of water to fill material for moisture conditioning shall be accomplished at the borrow area or stockpile area; with only minor water adjustment (less than 2 percent) during fill placement.

2. For dry material, apply water uniformly to surface of material in a way that will prevent free water from appearing on surface during or after compaction operations.

3. For soil material that is too wet to allow compaction, remove and replace backfill or fill material, or scarify sub-grade material and air dry, until desired moisture content is reached.

C. No compaction required for cut areas or undisturbed earth.

3.07 EXCESS ACCEPTABLE MATERIAL

A. Excess acceptable excavated material shall be loaded from stockpile and placed on areas where designated by the District Inspector.

B. Remove all vegetation, debris, unsuitable soil materials, obstructions and deleterious materials from designated areas prior to placement of excess acceptable material.

C. Construct fill as indicated on the drawings and as directed by the District Inspector.

D. Place material in layers of not more than 12-inches, loose depth. Moisture-control each layer of material to provide moisture content within 2 percent of optimum moisture content; but keep moist enough at all times to provide dust control.

E. Compact each layer to 90 percent of maximum dry density as per ASTM D 698.

F. Each lift shall be properly scarified before placement of another lift, as directed by the District Inspector.

G. Do not place embankments, backfill or fill material on surfaces that are muddy, frozen or contain frost or ice.

H. See Section 02316 for backfilling and filling procedures.

3.08 FINISH GRADING

A. Grade project areas uniformly to lines and grades, as indicated, including adjacent transition areas.

B. Finish surfaces shall be smooth and compact, with uniform levels or slopes between points where elevations are indicated, or between such points and existing grades, as directed.

C. Degree of finish required will be that which is normally obtainable from brader / grader operation.

D. Place topsoil on exterior slopes of embankments as indicated and as directed.

1. Place topsoil to a compacted thickness of 12 inches.

2. Remove roots, weeds, rocks, and foreign material while spreading.

3. Near plants, spread topsoil manually to prevent damage.

4. Fine grade topsoil to eliminate uneven areas and low spots. Maintain profiles and contour of subgrade.

5. Lightly compact placed topsoil.

3.09 FROST PROTECTION

A. If the project is shutdown because of cold weather conditions, provide frost protection as directed by the District Inspector.

1. All foundations shall be protected from freezing by leaving a temporary cover of approximately three feet of unexcavated material.

2. Provide frost tubes or other acceptable methods to determine frost depth while project is shutdown, as directed.

3. The final three feet of excavation above foundations shall be performed by continuous operation during non-freezing weather, as directed.

4. Final excavation shall be followed without delay by placement of embankment material as required and as directed.

B. Exposed finished excavated surfaces shall be kept moist at all times to prevent evaporation of the natural moisture in the material. Such surfaces shall also be protected from freezing, as required and as directed, by a method acceptable to the District Inspector.

3.10 EROSION CONTROL

A. Install erosion control mats on exterior slopes of embankments and on excavated slopes, as indicated on the drawings and as directed by the District Inspector.

B. Erosion control mats shall be installed according to the manufacturer’s written instructions and recommendations.

C. Native seed shall be placed at the planting rate indicated in Section 02923.

3.11 MISCELLANEOUS WORK

A. Areas designated by the District Inspector shall be used by the Contractor as a staging area for equipment and materials. After the project is completed, staging areas shall be cleaned and excess materials shall be properly disposed of as described herein; the area shall be graded to match original conditions; the area shall be seeded with native grass as specified herein and as directed by the District Inspector; and all other appurtenant work shall be done to restore areas to their original conditions, as directed.

3.12 TOLERANCES

A. Top Surface of Sub-grade: Plus, or minus 1/10 foot from required elevations.

B. Top Surface of Finish Grade: Plus, or minus 1/2 inch from required elevations.

3.13 FIELD QUALITY CONTROL

A. See appropriate sections of Contract Documents for general requirements for field inspection and testing.

B. See Section 02316 for compaction density testing requirements.

3.14 CLEAN-UP

A. Spread excess excavated material at site evenly and in an acceptable manner to District Inspector. Leave area in a clean and neat condition. Grade stockpile area to prevent standing surface water.

B. Leave borrow areas in a clean and neat condition. Grade to prevent standing surface water.

END OF SECTION

SECTION 02312

TRENCHING FOR PIPE WORK

PART 1 GENERAL

1.01 SECTION INCLUDES

A. Excavating, backfilling and compacting for project pipe lines.

1.02 RELATED SECTIONS

A. Section 02316 - Fill and Backfill: Backfilling for project pipe lines and at structures.

B. Section 03300 - Cast-in-Place Concrete: all concrete Work.

1.03 MEASUREMENT AND PAYMENT

A. See Section 02100 - Measurement and Payment.

1.04 REFERENCES

A. AASHTO T 99 - Moisture-Density Relations of Soils Using a 5.5-lb (2.5 kg) Rammer and a 12-in. (305 mm) Drop.

B. AASHTO T 180 - Moisture-Density Relations of Soils Using a 10-lb (4.54 kg) Rammer and an 18-in. (457 mm) Drop.

C. ASTM C 136 - Standard Test Method for Sieve Analysis of Fine and Coarse Aggregates.

D. ASTM D 698 - Test Method for Laboratory Compaction Characteristics of Soil Using Standard Effort (12,400 ft-lbf/ft3 (600 kN-m/m3)).

E. ASTM D 1556 - Standard Test Method for Density and Unit Weight of Soil in Place by the Sand-Cone Method.

F. ASTM D 1557 - Test Method for Laboratory Compaction Characteristics of Soil Using Modified Effort (56,000 ft-lbf/ft3 (2,700 kN m/m3)).

G. ASTM D 2167 - Standard Test Method for Density and Unit Weight of Soil in Place by the Rubber Balloon Method.

H. ASTM D 2487 - Standard Classification of Soils for Engineering Purposes (Unified Soil Classification System).

I. ASTM D 2922 - Standard Test Methods for Density of Soil and Soil-Aggregate in Place by Nuclear Methods (Shallow Depth).

J. ASTM D 3017 - Standard Test Method for Water Content of Soil and Rock in Place by Nuclear Methods (Shallow Depth).

K. ASTM D 4318 - Standard Test Method for Liquid Limit, Plastic Limit, and Plasticity Index of Soils.

L. Specification for Excavating on State Highways.

M. General Safety Orders Covering Utah Industries - Section 69, Trenches.

N. United States Department of Labor OSHA Publication 2085 - "Employer - Employee, Safe Practice for Excavation and Trenching Operations".

O. Utah Occupational Safety and Health Rules and Regulations - General Standard (UOSHA).

P. Use the latest edition of the above reference standards as of the date of the project.

1.05 DEFINITIONS

A. Pipe Line Grades and Elevations: Indicated on drawings.

B. Trench Cross Sections: Indicated on standard trench detail drawings.

C. Subgrade Elevations: Bottom of road base in paved areas, as indicated on drawings.

D. Finish Grade Elevations: Top of pavement in paved areas, as indicated on drawings.

E. Ground Elevations: Indicated on the drawings.

1.06 SUBMITTALS

A. See appropriate sections of the Contract Documents for submittal procedures.

B. Samples, where required by the Engineer: 10-pound sample of each type of fill material; submit to testing laboratory as directed by the laboratory.

C. Materials Sources: Submit name of imported materials source.

D. Fill Composition Test Reports: Results of laboratory tests on proposed and actual materials used.

E. Compaction Density Test Reports.

1.07 PROJECT CONDITIONS

A. Provide sufficient quantities of fill to meet project schedule and requirements. When necessary, store materials on site in advance of need.

B. When fill materials need to be stored on site, locate stockpiles where designated, as acceptable to the District Inspector.

1. Separate differing materials with dividers or stockpile separately to prevent intermixing.

2. Prevent contamination.

3. Protect stockpiles from erosion and deterioration of materials.

C. Verify that survey bench marks and intended elevations for the Work are as indicated.

D. Verify locations of existing utility lines in work area. Protect all utility lines from excavating equipment and vehicular traffic.

E. Protect plants, lawns, natural vegetation, and other features to remain.

F. Protect bench marks, survey control points, existing structures, fences, sidewalks, paving, curbs, and other improvements from excavating equipment and vehicular traffic.

PART 2 PRODUCTS

2.01 FILL MATERIALS

A. See Section 02316 - Fill and Backfill.

2.03 SOURCE QUALITY CONTROL

A. See appropriate sections of the Contract Documents for general requirements for testing and analysis of soil material.

B. Where fill materials are specified by reference to a specific standard, testing of samples for compliance will be provided before delivery to site.

C. If tests indicate materials do not meet specified requirements, change material and retest.

D. Provide materials of each type from same source throughout the Work.

PART 3 EXECUTION

3.01 EXAMINATION

A. Identify required lines, levels, contours, and datum locations.

B. Locate, identify, and protect utilities that remain and protect from damage.

C. Notify utility company to remove and relocate utilities, where and as required.

3.02 TRENCHING

A. Excavate trenches as required to allow project pipe to be installed to line and grade as indicated on the drawings.

B. Notify District Inspector of unexpected subsurface conditions and discontinue affected Work in area until notified to resume work.

C. All trenching shall be done according to OSHA Standards and other applicable regulations.

D. Do not interfere with 45 degree bearing splay of adjacent foundations.

E. Excavate trenches to width, depth and cross section as indicated on the trench detail drawings.

F. Hand trim excavations. Remove loose matter.

G. Remove large stones and other hard matter which could damage piping or impede consistent backfilling or compaction.

H. In landscaped and cultivated area, remove the top 2 feet of top soil material and store separately from other excavated material, as directed by the District Inspector.

I. Remove excavated material that is unsuitable for re-use on the project from site and dispose of in an acceptable manner.

J. Stockpile excavated material to be re-used in area designated on site (See Paragraph 1.07, Project Conditions, herein).

K. Remove excess excavated material from site and dispose of in an acceptable manner.

L. Excavation beyond or below lines and grades indicated shall be refilled with fill material and compacted, at the Contractor's expense.

M. No excavations shall be done through embankments or fills without prior approval from the Engineer. All pipe systems must be in place prior to construction of embankments or fills.

N. During construction, provide and maintain sufficient means and devices to promptly remove and properly dispose of all water entering excavations or other parts of the work.

1. Dispose of water from work area in an acceptable manner, without damage to adjacent property.

2. No pipe, concrete footings, foundations or floors shall be installed in water.

3. Water shall not be allowed to rise over concrete until it has set for at least 24 hours.

4. Water shall not be allowed to rise against walls and supporting beams for a period of 14 days after completion of walls and beams.

5. Any damage to pipe work or concrete work caused by water shall be repaired by the Contractor, at his expense.

O. The use of explosives will not be allowed; unless use has been specifically reviewed and accepted by the Engineer. All blasting shall be done by a reputable contractor specializing in the use of explosives, and is acceptable to the District Engineer.

3.03 PREPARATION FOR PIPE LINE PLACEMENT

A. Cut out soft areas of sub-grade not capable of compaction in place. Backfill with bedding material, Fill Type III, or stabilization material, Fill Type V, or other acceptable material, as directed by the District Inspector.

B. Compact sub-grade to density equal to or greater than requirements for subsequent fill material.

C. Until ready to backfill, maintain excavations and prevent loose soil from falling into excavation.

3.04 BACKFILLING

A. Backfilling shall conform to the requirements of Section 02316 - Fill and Backfill.

B. Backfill pipe zone with bedding material, Fill Type III, or other acceptable material.

C. Backfill above pipe zone, up to sub-grade or finish grade elevations with structural fill material, Fill Type II or Fill Type VIII or other acceptable material, as indicated on the trench detail drawings.

D. Employ a placement method that does not disturb or damage project pipe or other work.

E. Do not backfill with wet or frozen materials.

F. Maintain optimum moisture content of fill materials to attain required compaction density.

G. Granular Fill: Place and compact materials in equal continuous layers not exceeding 6 inches compacted depth.

H. After the lower portion of trench is backfilled and compacted in landscaped and cultivated areas, stockpiled top soil material shall be placed in the upper portion of trenches and compacted, as directed by the District Inspector.

I. Soil Fill: Place and compact material in equal continuous layers not exceeding 12 inches compacted depth.

J. Where directed by the District Inspector, backfill material may be consolidated by an acceptable method.

K. Correct areas that are over-excavated.

1. Use structural fill, flush to required elevation, compacted to at least 96 percent of maximum dry density as determined by the standard Proctor method (ASTM D-698).

L. Compaction Density for Backfill Within Pipe Zone: at least 96 percent of maximum dry density as determined by the standard Proctor method (ASTM D-698); unless otherwise specified or indicated.

M. Compaction Density for Backfill Above Pipe Zone, unless otherwise specified or indicated:

1. Under paving, concrete work, and similar construction: at least 96 percent of maximum dry density as determined by the standard Proctor method (ASTM D-698).

2. Within street rights-of-way: at least 96 percent of maximum dry density as determined by the standard Proctor method (ASTM D-698).

3. At other locations: at least 96 percent of maximum dry density as determined by the standard Proctor method (ASTM D-698).

N. Reshape and re-compact fills subjected to vehicular traffic.

3.05 BEDDING AND FILL AT SPECIFIC LOCATIONS

A. Project Pipe Lines:

1. Pipe Bedding: Use granular fill, Fill Type III.

2. Backfill trench to sub-grade or finish elevations with structural fill, Fill Type II; or Fill Type VIII if recommended by the geotechnical engineer of record and accepted by the District Inspector or District Engineer.

3. Compact bedding material in maximum 6-inch lifts to at least 96 percent of maximum dry density as determined by the standard Proctor method (ASTM D-698).

4. Compact backfill material in maximum 12-inch lifts to at least 96 percent of maximum dry density as determined by the standard Proctor method (ASTM D-698).

3.06 TOLERANCES

A. Top Surface of Backfilling in unimproved areas: Plus, or minus 1 inch from required elevations.

B. Top Surface of Backfilling in improved areas: Plus, or minus 1/2 inch from required elevations.

3.07 FIELD QUALITY CONTROL

A. See Section 01400 - Quality Requirements, for general requirements for field inspection and testing.

B. Testing is to be done as indicated in the Supplemental General Conditions; test results will be sent to the District Inspector within 24 hours after the tests are completed.

C. Perform compaction density testing on compacted fill in accordance with ASTM D1556, ASTM D2167, ASTM D2922, or ASTM D3017.

D. Evaluate results in relation to compaction curve determined by testing uncompacted material in accordance with ASTM D 698 ("standard Proctor"), ASTM D 1557 ("modified Proctor"), or AASHTO T 180.

E. If tests indicate work does not meet specified requirements, remove work, replace and retest.

F. Frequency of Tests: one test for each 200 cubic yards of material, or as directed by the Engineer.

3.12 CLEAN-UP

A. Spread excess excavated material at site evenly and in an acceptable manner to District Inspector. Leave area in a clean and neat condition. Grade stockpile area to prevent standing surface water.

B. Leave borrow areas in a clean and neat condition. Grade to prevent standing surface water.

END OF SECTION

SECTION 02314

CONDUITS FOR POWER LINES

PART 1 GENERAL

1.01 SECTION INCLUDES

A. Excavating, backfilling and compacting for power line conduits and appurtenant items.

B. Furnishing and installing electrical power line conduits and appurtenant items.

1.02 RELATED SECTIONS

A. Section 02316 - Fill and Backfill: Backfilling for power conduits and appurtenances.

1.03 MEASUREMENT AND PAYMENT

A. See Section 02100 - Measurement and Payment.

1.04 REFERENCES

A. AASHTO T 99 - Moisture-Density Relations of Soils Using a 5.5-lb (2.5 kg) Rammer and a 12-in. (305 mm) Drop.

B. AASHTO T 180 - Moisture-Density Relations of Soils Using a 10-lb (4.54 kg) Rammer and an 18-in. (457 mm) Drop.

C. ASTM C 136 - Standard Test Method for Sieve Analysis of Fine and Coarse Aggregates.

D. ASTM D 698 - Test Method for Laboratory Compaction Characteristics of Soil Using Standard Effort (12,400 ft-lbf/ft3 (600 kN-m/m3)).

E. ASTM D 1556 - Standard Test Method for Density and Unit Weight of Soil in Place by the Sand-Cone Method.

F. ASTM D 1557 - Test Method for Laboratory Compaction Characteristics of Soil Using Modified Effort (56,000 ft-lbf/ft3 (2,700 kN m/m3)).

G. ASTM D 2167 - Standard Test Method for Density and Unit Weight of Soil in Place by the Rubber Balloon Method.

H. ASTM D 2487 - Standard Classification of Soils for Engineering Purposes (Unified Soil Classification System).

I. ASTM D 2922 - Standard Test Methods for Density of Soil and Soil-Aggregate in Place by Nuclear Methods (Shallow Depth).

J. ASTM D 3017 - Standard Test Method for Water Content of Soil and Rock in Place by Nuclear Methods (Shallow Depth).

K. ASTM D 4318 - Standard Test Method for Liquid Limit, Plastic Limit, and Plasticity Index of Soils.

L. Specification for Excavating on State Highways.

M. General Safety Orders Covering Utah Industries - Section 69, Trenches.

N. United States Department of Labor OSHA Publication 2085 - "Employer - Employee, Safe Practice for Excavation and Trenching Operations".

O. Utah Occupational Safety and Health Rules and Regulations - General Standard (UOSHA).

P. Use the latest edition of the above reference standards as of the date of the project.

1.05 DEFINITIONS

A. Conduit Grades and Elevations: As indicated on the drawings.

B. Trench Cross Sections: Indicated on drawing and as directed.

C. Ground Elevations: Existing ground surfaces.

1.06 SUBMITTALS

A. See appropriate sections of the Contract Documents for submittal procedures.

B. Samples, where required by the District Engineer: 10-pound sample of each type of fill material; submit to testing laboratory as directed by the laboratory.

C. Materials Sources: Submit name of imported materials source.

D. Fill Composition Test Reports: Results of laboratory tests on proposed and actual materials used.

E. Compaction Density Test Reports.

1.07 PROJECT CONDITIONS

A. Verify that survey bench marks and intended elevations for the Work are as indicated.

B. Verify locations of existing utility lines in work area. Protect all utility lines from excavating equipment and vehicular traffic.

C. Protect plants, lawns, and other features to remain.

D. Protect bench marks, survey control points, existing structures, fences, sidewalks, paving, curbs, and other improvements from excavating equipment and vehicular traffic.

PART 2 PRODUCTS

2.01 FILL MATERIALS

A. See Section 02316 - Fill and Backfill.

2.03 SOURCE QUALITY CONTROL

A. See appropriate sections of the Contract Documents for general requirements for testing and analysis of soil material.

B. Where fill materials are specified by reference to a specific standard, testing of samples for compliance will be provided before delivery to site.

C. If tests indicate materials do not meet specified requirements, change material and retest.

D. Provide materials of each type from same source throughout the Work.

PART 3 EXECUTION

3.01 EXAMINATION

A. Identify required lines, levels, contours, and datum locations.

B. Locate, identify, and protect utilities that remain and protect from damage.

C. Notify utility company to remove and relocate utilities, where and as required.

3.02 TRENCHING

A. Excavate trenches, as required and as directed by the District Inspector, to allow power conduits and junction boxes to be installed to line and grade as indicated on the drawings and as directed.

B. Notify the District Inspector of unexpected subsurface conditions and discontinue affected Work in area until notified to resume work.

C. All trenching shall be done according to OSHA Standards and other applicable regulations.

D. Do not interfere with 45 degree bearing splay of adjacent foundations.

E. Excavate trenches to width, depth and cross section as indicated on the drawings.

F. Hand trim excavations. Remove loose matter.

G. Remove large stones and other hard matter which could damage power line conduits and boxes or impede consistent backfilling or compaction.

H. In landscaped and other unimproved areas, remove the top 12 inches of top soil material and store the top soil material separately from other excavated materials, as directed by the District Inspector.

I. Remove excavated material that is unsuitable for re-use on the project from site and dispose of in an acceptable manner.

J. Stockpile excavated material to be re-used in area designated on site (See Paragraph 1.07, Project Conditions, herein).

K. Remove excess excavated material from site and dispose of in an acceptable manner.

L. Excavation beyond or below lines and grades indicated shall be refilled with fill material and compacted, at the Contractor's expense.

M. Power line conduits under roadways, driveways, sidewalks and other paved areas shall be installed by a trenchless method, as indicated and as directed. The trenchless method shall be acceptable to the District Inspector.

    1. Excavate bore pits at each side of the paved areas to be crossed; pits shall be of the size and depth as required for the trenchless crossing operations

N. During construction, provide and maintain sufficient means and devices to promptly remove and properly dispose of all water entering excavations or other parts of the work.

    1. Dispose of water from work area in an acceptable manner, without damage to adjacent property.

    2. No power line conduits or boxes shall be installed in water.

    3. Any damage to power line conduits caused by water shall be repaired by the Contractor, at his expense.

O. The use of explosives will not be allowed.

3.03 PREPARATION FOR POWER LINE CONDUIT PLACEMENT

A. Cut out soft areas of subgrade not capable of compaction in place. Backfill over-excavations with backfill material, Fill Type III, or stabilization material, Fill Type V, or other acceptable material, as directed by the District Inspector. Compact subgrade to density equal to or greater than requirements for subsequent fill material, as directed.

B. Until ready to backfill, maintain excavations and prevent loose soil from falling into excavation.

3.04 BACKFILLING

A. Backfilling shall conform to the requirements of Section 02316 - Fill and Backfill.

B. Backfill bottom of trenches and around PVC conduits with bedding material, Fill Type VI, or other acceptable material, as indicated on the drawings or as directed by the District Inspector.

C. Backfill above bedding material, up to sub-grade or finish grade elevations, with structural fill material, Fill Type II or Fill Type VIII or other acceptable material, as indicated on the trench detail drawings.

D. Employ a placement method that does not disturb or damage power line conduits or other work.

E. Do not backfill with wet or frozen materials.

F. Maintain optimum moisture content of fill materials to attain required compaction density.

G. Sand Fill: Place and compact materials in equal continuous layers not exceeding 6 inches compacted depth.

H. Soil Fill: Place and compact material in equal continuous layers not exceeding 12 inches compacted depth.

I. After the lower portion of trench is backfilled and compacted in landscaped areas, stockpiled top soil material shall be placed in the upper portion of trenches and compacted, as directed.

J. Where acceptable to the District Inspector, backfill material may be consolidated by an acceptable method.

J. Correct areas that are over-excavated.

1. Use structural fill, flush to required elevation, compacted to at least 96 percent of maximum dry density as determined by the modified Proctor method (ASTM D-1557).

K. Compaction Density for Bedding: at least 97 percent of maximum dry density as determined by the modified Proctor method (ASTM D-1557); unless otherwise specified or indicated.

L. Compaction Density for Backfill Above Bedding, unless otherwise specified or indicated:

1. Within street rights-of-way: at least 97 percent of maximum dry density as determined by the modified Proctor method (ASTM D-1557).

2. Under paving, concrete work, and similar construction: at least 97 percent of maximum dry density as determined by the modified Proctor method (ASTM D-1557).

3. At other locations: at least 85 percent of maximum dry density as determined by the modified Proctor method (ASTM D-1557).

M. Reshape and re-compact fills subjected to vehicular traffic.

3.05 BEDDING AND FILL AT SPECIFIC LOCATIONS

A. Power Conduits:

1. Trench Bedding: Use sand fill, Fill Type VI.

2. Backfill trench to sub-grade or finish elevations with structural fill, Fill Type II; or Fill Type VIII if recommended by the geotechnical engineer of record and accepted by the District Inspector.

3. Compact bedding material in maximum 6-inch lifts to at least 97 percent of maximum dry density as determined by the modified Proctor method (ASTM D-1557).

4. Compact backfill material in maximum 12-inch lifts to densities shown above.

3.06 INSTALLATION OF POWER CONDUIT

A. Power conduit shall be installed as indicated on the project drawings and as directed by the District Inspector.

B. Junction boxes shall be installed as indicated on the project drawings and as directed by the District Inspector.

C. Installation shall conform to the requirements of Section 16131 and Section 16138.

3.07 RESTORATION OF LANDSCAPED AREAS

A. Restore existing landscaped areas that are disturbed or damaged by project trenching operations or by structural excavating, as required and as directed by the District Inspector. Landscaped areas shall be as designated by the District Inspector.

1. Remove the top 12-inches of top soil material and store the top soil material separately from other excavated material, as directed.

2. After the lower portions of trenches or excavations are backfilled and compacted, the stockpiled top soil material shall be placed in the upper portion of the trenches or excavations and compacted, as required and as directed.

3. The top of restored top soil shall match adjacent ground surfaces, as directed.

4. Prepare the surfaces of the restored top soil as required for restoration of landscaped areas.

5. The landscaped areas shall be restored with landscaping items to match original conditions of the areas.

6. Provide new landscaping items of the type similar to adjacent vegetation; and plant as directed.

3.07 TOLERANCES

A. Top Surface of Backfilling in unimproved areas: Plus, or minus 1 inch from required elevations.

B. Top Surface of Backfilling in improved areas: Plus, or minus 1/2 inch from required elevations.

3.08 FIELD QUALITY CONTROL

A. See Section 01400 - Quality Requirements, for general requirements for field inspection and testing.

B. Testing is to be done as indicated in the Supplemental General Conditions; test results will be sent to the District Inspector within 24 hours after the tests are completed.

C. Perform compaction density testing on compacted fill in accordance with ASTM D1556, ASTM D2167, ASTM D2922, or ASTM D3017.

D. Evaluate results in relation to compaction curve determined by testing uncompacted material in accordance with ASTM D 698 ("standard Proctor"), ASTM D 1557 ("modified Proctor"), or AASHTO T 180.

E. If tests indicate work does not meet specified requirements, remove work, replace and retest.

F. Frequency of Tests: one test for each 200 cubic yards of material, or as directed by the District Engineer.

3.09 CLEAN-UP

A. Spread excess excavated material at site evenly and in an acceptable manner to District Inspector. Leave area in a clean and neat condition. Grade stockpile area to prevent standing surface water.

B. Leave borrow areas in a clean and neat condition. Grade to prevent standing surface water.

END OF SECTION

SECTION 02315

STRUCTURAL EARTHWORK

PART 1 GENERAL

1.01 SECTION INCLUDES

A. Excavating for structure volume below grade, footings, slabs-on-grade, paving, curb and gutter, and other concrete work.

1.02 RELATED SECTIONS

A. Section 02312 - Trenching for Pipe Work: Excavating, backfilling and compacting for project pipe lines.

B. Section 02316 - Fill and Backfill: Fill materials, filling, and compacting.

1.03 REFERENCES

A. See Section 02312 - Trenching for Pipe Work for list of references.

1.04 MEASUREMENT AND PAYMENT

A. See Section 02100 - Measurement and Payment.

1.05 PROJECT CONDITIONS

A. Verify that survey bench mark and intended elevations for the Work are as indicated.

B. Protect bench marks, survey control points, existing structures, fences, sidewalks, paving, and curbs from excavating equipment and vehicular traffic.

PART 2 PRODUCTS - NOT USED

PART 3 EXECUTION

3.01 PREPARATION

A. Identify required lines, levels, contours, and datum locations.

B. Locate, identify, and protect utilities that remain and protect from damage.

3.02 EXCAVATING

A. Excavate to accommodate new structures and construction operations to lines and elevations indicated.

B. Notify District Inspector of unexpected subsurface conditions and discontinue affected Work in area until notified to resume work.

C. All excavating shall be done according the OSHA Standards and other applicable safety regulations.

D. Do not interfere with 45 degree bearing splay of foundations.

E. Cut excavations wide enough to allow construction of structures as indicated; bottom dimensions shall be sufficient to provide at least 12 inches clear between extreme outside of concrete work and side of excavation. No tunneling or under cutting will be permitted.

F. Hand trim excavations. Remove loose matter.

G. Correct areas that are over-excavated and load-bearing surfaces that are disturbed; see Section 02316.

H. Grade top perimeter of excavation to prevent surface water from draining into excavation.

I. Remove excavated material that is unsuitable for re-use from site and dispose of in an acceptable manner.

J. Stockpile excavated material to be re-used in areas designated on site.

K. Spread excess excavated material at site evenly and in an acceptable manner to District Inspector.

3.03 BACKFILLING

A. Backfilling shall conform to the requirements of Section 02316 - Fill and Backfill.

B. Backfill under structures with structural backfill material, Fill Type II, with no particle size larger than 2 inches, or other acceptable material, and compact to 96 percent of maximum density.

C. Backfill around structures with structural backfill material, Fill Type II, with no particle size larger than 2 inches, or other acceptable material, up to sub-grade or finish grade elevations, as indicated, and compact to at least 96 percent of maximum dry density as determined by the standard Proctor method ASTM D-698.

D. Employ placement method that will not disturb or damage structure.

E. Backfill shall be brought up uniformly around structures, so as to eliminate any possibility of unbalanced loading on structure which could damage or movement.

F. Backfill and compaction shall be done as described in Section 02300.

G. No backfill shall be placed against new concrete work until concrete has been accepted by the District Inspector; and backfill operation has been authorized.

H. Granular Fill: Place and compact materials in equal continuous layers not exceeding 6 inches, compacted.

I. Structural Backfill: Place and compact materials uniformly around structures in equal continuous layers not exceeding 12 inches, compacted.

J. Correct areas that are over-excavated with structural backfill material, compacted to at least 96 percent of maximum dry density as determined by the standard Proctor method ASTM D-698; at the Contractor's expense.

3.04 FIELD QUALITY CONTROL

A. See appropriate sections of the Contract Documents for general requirements for field inspection and testing.

B. Provide for visual inspection of load-bearing excavated surfaces before placement of foundations.

C. Testing is to be done as indicated in appropriate sections of the Contract Documents; test results will be sent to the District Inspector within 24 hours after the tests are completed.

D. Perform compaction density testing on compacted backfill in accordance with ASTM D1556, ASTM D2167, ASTM D2922, or ASTM D3017.

3.05 PROTECTION

A. Prevent displacement of banks and keep loose soil from falling into excavation; maintain soil stability.

B. Protect bottom of excavations and soil adjacent to and beneath foundation from freezing.

C. See Section 02300 for protection of adjacent structures.

3.06 CLEAN-UP

A. Spread excess excavated material at site evenly and in an acceptable manner to District Inspector. Leave area in a clean and neat condition. Grade stockpile area to prevent standing surface water.

END OF SECTION

SECTION 02316

FILL AND BACKFILL

PART 1 GENERAL

1.01 SECTION INCLUDES

A. Backfilling and compacting for project pipe lines.

B. Filling, backfilling, and compacting for miscellaneous structures.

1.02 RELATED SECTIONS

A. Section 02300 - General Earthwork: Earthwork for site work.

B. Section 02312 - Trenching for Pipe Work: Excavating for project pipe lines.

C. Section 02315 - Structural Excavation: Excavating for structures.

1.03 MEASUREMENT AND PAYMENT

A. See Section 02100 - Measurement and Payment.

B. Field measurements, of trenches, structures and other excavations, and weigh tickets will be used as a check of measurement for materials furnished, but will not be individually considered as evidence of placement.

1. A factor based on the density of material supplied will be used for converting from tons to cubic yards measurements, when tickets are used for checking quantities furnished. Allowance for waste will be considered in such conversions.

1.04 REFERENCES

A. AASHTO T 99 - Moisture-Density Relations of Soils Using a 5.5-lb (2.5 kg) Rammer and a 12-in. (305 mm) Drop.

B. AASHTO T 180 - Standard Method of Test for Moisture-Density Relations of Soils Using a 10-lb (4.54 kg) Rammer and an 18-in. (457 mm) Drop; American Association of State Highway and Transportation Officials.

C. ASTM C 136 - Standard Test Method for Sieve Analysis of Fine and Coarse Aggregates.

D. ASTM D 698 - Test Method for Laboratory Compaction Characteristics of Soil Using Standard Effort (12,400 ft-lbf/ft3 (600 kN-m/m3)).

E. ASTM D 1556 - Standard Test Method for Density and Unit Weight of Soil in Place by the Sand-Cone Method.

F. ASTM D 1557 - Test Method for Laboratory Compaction Characteristics of Soil Using Modified Effort (56,000 ft-lbf/ft3 (2,700 kN m/m3)).

G. ASTM D 2167 - Standard Test Method for Density and Unit Weight of Soil in Place by the Rubber Balloon Method.

H. ASTM D 2321 - Standard Practice for Underground Installation of Thermoplastic Pipe for Sewers and Other Gravity-Flow Applications.

I. ASTM D 2487 - Standard Classification of Soils for Engineering Purposes (Unified Soil Classification System).

J. ASTM D 2922 - Standard Test Methods for Density of Soil and Soil-Aggregate in Place by Nuclear Methods (Shallow Depth).

K. ASTM D 3017 - Standard Test Method for Water Content of Soil and Rock in Place by Nuclear Methods (Shallow Depth).

L. ASTM D 4318 - Standard Test Method for Liquid Limit, Plastic Limit, and Plasticity Index of Soils.

M. Use the latest issue of the above reference standards as of the date of the Project.

1.05 DEFINITIONS

A. Finish Grade Elevations: Indicated on drawings.

B. Subgrade Elevations: Indicated on drawings.

C. Pipe Invert Elevations: Indicated on drawings.

1.06 SUBMITTALS

A. See Section 01300 - Administrative Requirements, for submittal procedures.

B. Samples: 10-pound sample of each type of fill; submit in air-tight containers to testing laboratory, if requested by the District Engineer.

C. Materials Sources: Submit name of imported materials source.

D. Fill Composition Test Reports: Results of laboratory tests on proposed and actual materials used, if requested by the District Engineer.

E. Compaction Density Test Reports.

1.07 PROJECT CONDITIONS

A. Provide sufficient quantities of fill to meet project schedule and requirements. When necessary, store materials on site in advance of need.

B. When fill materials need to be stored on site, locate stockpiles where designated.

1. Separate differing materials with dividers or stockpile separately to prevent intermixing.
   a. Protect stockpiles from erosion and deterioration of materials.

2. Prevent contamination.

C. Verify that survey bench marks and intended elevations for the Work are as indicated.

PART 2 PRODUCTS

2.01 FILL MATERIALS

A. General Fill - Fill Type I: Imported borrow or soil excavated on-site if acceptable to the District Engineer; conforming to Type A-1-a of AASHTO Classification of Soils and Soil-Aggregate Mixtures.

1. Graded.

2. Free of lumps larger than 3 inches, rocks larger than 2 inches, and debris.

3. Conforming to ASTM D 2487 Group Symbol CL; liquid level less than 50.

4. Not more than 15 percent passing No. 200 sieve.

B. Structural Fill - Fill Type II: Imported borrow or soil excavated on-site if acceptable to the District Engineer; conforming to Type A-1-a of AASHTO Classification of Soils and Soil-Aggregate Mixtures.

1. Graded.

2. Free of lumps larger than 3 inches, rocks larger than 2 inches, deleterious matter and debris.

3. Conforming to ASTM D 2487 Group Symbol GW, GP, SW and SP.

4. Not more than 15 percent passing No. 200 sieve.

C. Concrete for Fill: Lean concrete.

1. Conforming to Flowable Fill, Section 03575 of the Utah Department of Transportation's Standard Specifications.

D. Granular Fill - Gravel - Fill Type III: Angular crushed washed stone; free of shale, clay, friable material and debris.

1. Graded in accordance with ASTM C 136, within the following limits:
   a. 2-inch sieve: 100 percent passing.
   b. 1 inch sieve: 95 percent passing.
   c. 3/4-inch sieve: 95 to 100 percent passing.
   d. 5/8-inch sieve: 75 to 100 percent passing.
   e. 3/8-inch sieve: 55 to 85 percent passing.
   f. No. 4 sieve: 35 to 60 percent passing.
   g. No. 16 sieve: 15 to 35 percent passing.
   h. No. 40: 10 to 25 percent passing.
   i. No. 200: 3 to 5 percent passing.

E. Granular Fill - Course Gravel - Fill Type IV: Free draining granular backfill material; natural or crushed aggregate; washed, free of clay, shale, organic matter.

1. Graded in accordance with ASTM C 136, within the following limits:
   a. 2-inch sieve: 100 percent passing.
   b. 1 inch sieve: 95 to 100 percent passing.
   c. 1/2-inch sieve: 25 to 60 percent passing.
   d. No. 4 sieve: 0 to 10 percent passing.

F. Granular Fill - 3/4-inch Gravel - Fill Type V: Angular crushed washed stone; free of shale, clay, friable material and debris.

1. Graded in accordance with ASTM C-136, within the following limits:
   a. 1 inch sieve: 100 percent passing.
   b. 3/4-inch sieve: 90 to 100 percent passing.
   c. 3/8-inch sieve: 20 to 55 percent passing.
   d. No. 4 sieve: 0 to 10 percent passing.
   d. No. 8 sieve: 0 to 5 percent passing.

G. Sand - Fill Type VI: Natural river or bank sand; washed; free of silt, clay, loam, friable or soluble materials, and organic matter.

1. Graded in accordance with ASTM C 136; within the following limits:
   a. No. 4 sieve: 100 percent passing.
   b. No. 14 sieve: 10 to 100 percent passing.
   c. No. 50 sieve: 5 to 90 percent passing.
   d. No. 100 sieve: 4 to 30 percent passing.
   e. No. 200 sieve: 0 percent passing.

H. Topsoil - Fill Type VII: Topsoil excavated on-site.

1. Graded.

2. Free of roots, rocks larger than 1/2-inch, subsoil, debris, large weeds and foreign matter.

3. Acidity range (pH) of 5.5 to 7.5.

4. Containing a minimum of 4 percent and a maximum of 25 percent inorganic matter.

5. Conforming to ASTM D2487 Group Symbol OH.

I. On-Site Soil - Fill Type VIII: Material excavated during trenching and other excavating operations; free of organic matter and debris.

1. On-site soil may only be used as backfill if recommended by the geotechnical engineer of record; and the material is acceptable to the District Inspector or District Engineer.
   a. Material shall have 100 percent passing 6” sieve; 60 to 75 percent passing #4 sieve; and minimum of 40 percent passing # 200 sieve.

2. The District shall employ and pay for quality control services of the geotechnical engineer of record to determine if the on-site material can be used as backfill material.

3. The geotechnical engineer of record shall define placement and compaction requirements for on-site material.

4. The geotechnical engineer of record shall prepare a letter or report summerizing:
   a. Testing methods, test frequencies and observations.
   b. Any non-conforming conditions and corrective actions taken to remedy the non-conformities.
   c. Compliance of the work to the project specifications.

2.02 ACCESSORIES

A. Geotextile Fabric: Non-biodegradable, non-woven, drainage fabric; No. 4545 manufactured by Amoco, or Typar No. 3401, or acceptable equal.

2.03 SOURCE QUALITY CONTROL

A. See Section 01400 - Quality Requirements, for general requirements for testing and analysis of soil material.

B. Where fill materials are specified by reference to a specific standard, testing of samples for compliance will be provided before delivery to site.

C. If tests indicate materials do not meet specified requirements, change material and retest.

D. Provide materials of each type from same source throughout the Work.

PART 3 EXECUTION

3.01 EXAMINATION

A. Identify required lines, levels, contours, and datum locations.

B. Verify structural ability of unsupported walls to support imposed loads by the fill.

3.02 PREPARATION

A. Scarify subgrade surface to a depth of 6 inches to identify soft spots.

B. Cut out soft areas of subgrade not capable of compaction in place. Backfill with Fill Type II or Fill Type III.

C. Compact subgrade to density equal to or greater than requirements for subsequent fill material.

D. Until ready to fill, maintain excavations and prevent loose soil from falling into excavation.

3.03 FILLING

A. Fill to finish contours and elevations indicated using unfrozen materials.

B. Fill up to subgrade elevations where indicated.

C. Employ a placement method that does not disturb or damage other work.

D. Do not fill over porous, wet, frozen or spongy subgrade surfaces.

E. Maintain optimum moisture content of fill materials to attain required compaction density.

F. Granular Fill: Place and compact materials in equal continuous layers not exceeding 6 inches compacted depth.

G. Soil Fill: Place and compact material in equal continuous layers not exceeding 12 inches compacted depth.

H. Slope grade away from building minimum 2 inches in 10 feet, unless noted otherwise. Make gradual grade changes. Blend project slopes into existing areas.

I. Correct areas that are over-excavated.

1. Load-bearing foundation surfaces: Use structural fill, Fill Type II, flush to required elevation, compacted to at least 95 percent of maximum dry density as determined by the modified Proctor method (ASTM D-1557);

2. Other areas: Use general fill, Fill Type I or Fill Type VIII, flush to required elevation, compacted to at least 95 percent of maximum dry density as determined by the modified Proctor method (ASTM D-1557);

J. Compaction Density Unless Otherwise Specified or Indicated:

1. Under paving, slabs-on-grade, and similar construction: to at least 95 percent of maximum dry density as determined by the modified Proctor method (ASTM D-1557);

2. Under structures: to at least 95 percent of maximum dry density as determined by the modified Proctor method (ASTM D-1557);

3. At other locations: to at least 90 percent of maximum dry density as determined by the modified Proctor method (ASTM D-1557);

K. Consolidation density shall be 85 percent of maximum dry density.

L. Reshape and re-compact fills subjected to vehicular traffic.

3.04 FILL AT SPECIFIC LOCATIONS

A. Fill Within Pipe Zone, along Pipe Lines:

1. Use granular fill, Fill Type III, or other acceptable material.

2. Fill under, around and to one foot over PVC pipe; and under, around and to the top of concrete pipe; as indicated on the trench detail drawing.

3. Maximum depth per lift: 6 inches compacted.

4. Compact to at least 90 percent of maximum dry density as determined by the modified Proctor method (ASTM D-1557).

B. Fill Above Pipe Zone, along Pipe Lines, in Improved Areas:

1. Use granular fill, Fill Type II, Fill Type VIII, or other acceptable material.

2. Fill from top of pipe zone to subgrade elevations or finish grade; as indicated on the trench detail drawing or as required and as directed.

3. Maximum depth per lift: 12 inches compacted.

4. Compact to at least 95 percent of maximum dry density as determined by the modified Proctor method (ASTM D-1557).

C. Fill Above Pipe Zone, along Pipe Lines, in Unimproved Areas:

1. Use general fill, Fill Type I, or Fill Type VIII, unless otherwise specified or indicated.

2. Fill to finish grade elevations.

3. Maximum depth per lift: 12 inches, compacted.

4. Compact to at least 85 percent of maximum dry density as determined by the modified Proctor method (ASTM D-1557).

D. Structural Fill at structures and embankments:

1. Use structural fill, Fill Type II.

2. Fill up to subgrade elevations.

3. Maximum depth per lift: 12 inches, compacted.

4. Compact to at least 95 percent of maximum dry density as determined by the modified Proctor method (ASTM D-1557).

E. At Foundation Walls and Footings:

1. Use structural fill, Fill Type II.

2. Fill up to finish grade elevation.

3. Compact each lift to at least 95 percent of maximum dry density as determined by the modified Proctor method (ASTM D-1557).

4. Do not backfill against unsupported foundation walls.

5. Backfill simultaneously on each side of unsupported foundation walls until supports are in place.

F. Fill Above Pipe Zone, along Pipe Lines, in Landscaped and Cultivated Areas:

1. Use general fill, Fill Type I, or Fill Type VIII, unless otherwise specified or indicated.

2. Fill up to 12 inches below finish grade elevations; and fill to finish grade elevations with top soil material removed from the trench.

3. Maximum depth per lift: 12 inches, compacted.

4. Compact to at least 85 percent of maximum dry density as determined by the modified Proctor method (ASTM D-1557).

3.05 CLAY BARRIERS

A. Clay barriers shall be constructed where and as indicated on the drawings, and as directed by the District Engineer.

B. Furnish and place bentonite clay material for the barriers; material shall be acceptable to the District Engineer.

3.06 TOLERANCES

A. Top Surface of General Filling: Plus, or minus 1 inch from required elevations.

B. Top Surface of Filling Under Paved Areas: Plus, or minus 1/2 inch from required elevations.

3.07 FIELD QUALITY CONTROL

A. See Section 01400 - Quality Requirements, for general requirements for field inspection and testing.

B. Testing is to be done by an independent testing company for the Owner or Contractor, as indicated in the Supplemental General Conditions; test results for all tests will be sent to the District Engineer within 24 hours after the tests have been completed.

C. Perform compaction density testing on compacted fill in accordance with ASTM D1556, ASTM D2167, ASTM D2922, or ASTM D3017.

D. Evaluate results in relation to compaction curve determined by testing uncompacted material in accordance with ASTM D 698 ("standard Proctor"), ASTM D 1557 ("modified Proctor"), or AASHTO T 180.

E. If tests indicate work does not meet specified requirements, remove work, replace and retest.

F. Frequency of Tests: Tests shall be done as listed in the following table and as directed by the District Inspector or District Engineer.

MATERIAL	DENSITY TEST	GRADATION + PLASTICITY INDEX
Embankment	200 cubic yards	800 cubic yards
Clay	200 cubic yards	2,000 cubic yards
Road Base	400 cubic yards	1,200 cubic yards

G. The District Inspector shall have the right to determine when and where all soil testing shall be preformed.

H. Contractor shall provide excavation and safety equipment, as required, for test holes used in quality assurance testing, as directed by the District Inspector; at no additional cost to the District.

I. The District will provide quality assurance testing as follows:

1 The District's testing company will conduct tests in areas of the work which have been completed. The frequency of testing will be determined by the District Inspector dependent upon the size of project; but there will be a minimum of three tests conducted on each project.

2. The quality assurance testing procedure will include:
   a. Review the density test results recorded by the independent testing agency at time of construction to verify frequency of tests; verify that compaction in accepted work areas meets the project specifications; and verify that corrective actions were taken, where required, and recorded.

b. Conduct in-place density tests, following procedures established by the project specifications.
   (1) Acceptance of the backfill will be based on density determinations made at the three or more test locations, as determined by the District Inspector.
   (2) The location of the test sites will be chosen based on areas completed by the contractor and based on the judgment of the District Inspector.
   (3) Approval of work will be dependent on tests indicating a density meeting the project specifications.
   (4) At each test location, a sample of the soil tested will be taken to the testing laboratory for the moisture/density relationship testing.
   (5) The Contractor will assist the District's testing company by performing the excavations necessary to make the required tests and providing required safety equipment, as directed by the District Inspector.

3. If a work area does not meet the compaction criteria indicated in the specifications, the District will be immediately notified of the test results. At that time, the District will have the opportunity of re-testing the area that is not within compliance or report the non-compliance to the Contractor.

4. Once the Contractor has completed corrective actions in the area of non-compliant work, two additional tests will be conducted to verify that the corrective action has resulted in acceptable work.

3.08 CLEAN-UP

A. Spread excess excavated material at site evenly and in an acceptable manner to District Inspector. Leave area in a clean and neat condition. Grade stockpile area to prevent standing surface water.

B. Leave borrow areas in a clean and neat condition. Grade to prevent standing surface water.

END OF SECTION

SECTION 02318

ROCK REMOVAL

PART 1 GENERAL

1.01 SECTION INCLUDES

A. Removal of large rock during excavation.

1.02 RELATED SECTIONS

A. Section 02300 - General and Roadway Earthwork

B. Section 02316 - Fill and Backfill: Fill materials.

1.03 MEASUREMENT AND PAYMENT

A. See Section 02100 - Measurement and Payment.

1.04 DEFINITIONS

A. Site Rock: Solid mineral material with a volume in excess of 1/3 cubic yard or solid material that cannot be removed with a 3/4 cubic yard capacity power shovel without drilling.

1.05 SUBMITTALS

A. See Section 01300 - Administrative Requirements, for submittal procedures.

PART 2 PRODUCTS - NOT USED

PART 3 EXECUTION

3.01 EXAMINATION

A. Verify site conditions and note subsurface irregularities affecting work of this section.

3.02 PREPARATION

A. Identify required lines, levels, contours, and datum.

3.03 ROCK REMOVAL

A. Excavate and remove rock by mechanical methods acceptable to the District Inspector.

B. Mechanical Methods: Drill holes and utilize expansive tools to fracture rock.

C. Form solid bearing at bottom of excavations.

D. Remove shaled layers to provide sound and unshattered base for project work.

E. In utility trenches, excavate to 6 inches below invert elevation of pipe and 24 inches wider than pipe diameter.

F. Remove excavated materials from site as directed, and dispose of the materials in an acceptable manner.

G. Correct unauthorized rock removal as directed by the Engineer, in accordance with backfill and compaction requirements of Section 02316.

3.04 FIELD QUALITY CONTROL

A. Independent agency field inspection will be provided under provisions of Section 01400 - Quality Requirements.

B. Provide for visual inspection of foundation bearing surfaces and cavities formed by removed rock.

END OF SECTION

SECTION 02380

RUBBER LINER FOR TANK BASE

PART 1 GENERAL

1.01 SECTION INCLUDES

A. Rubber liner for tank base.

1.02 RELATED SECTIONS

A. Section 02300 - General Earthwork.

B. Section 02315 - Structural Excavation.

C. Section 02316 - Fill and Backfill.

D. Section 02684 - Culinary Water Storage Tank.

1.03 MEASUREMENT AND PAYMENT

A. See Section 02100 - Measurement and Payment.

1.04 UNIT PRICES

A. See Section 01270 - Unit Prices, for additional unit price requirements.

1.05 SUBMITTALS

A. See Section 01300 - Administrative Requirements, for submittal procedures.

B. Product Data: Provide data on liner material and appurtenant items.

C. Manufacturer’s Certificate: Certify that products meet or exceed specified requirements.

1.06 QUALITY ASSURANCE

A. Perform work in accordance with Owner’s requirements as described herein.

1.07 PROJECT CONDITIONS

A. Coordinate work on water tank liner with District Inspector.

PART 2 PRODUCTS

2.01 RUBBER LINER

A. The rubber liners are to be a cured single-ply membrane made from an EPDM polymer. The panels are to be assembled in the factory prior to vulcanization in order to limit on-site field seaming. The panels shall be folded and rolled on cores 10.8’ long.

1. Factory panels shall have thickness of 45 mils.

2. Each roll shall be labeled with the membrane type, thickness, dimensions, manufacture date, and production lot, and an arrow indicating direction of unrolling.

3. All elements of the lining system shall be as described in the manufacturer's Technical Data Sheets.

B. Fasteners. Fasteners shall be as recommended by the liner manufacturer.

C. Accessories. All accessories shall be recommended by the liner manufacturer.

D. Manufacturer. The rubber liners shall be PondGard Rubber Liners, as manufactured by Firestone Specialty Products, Indianapolis, Indiana 46240; Phone: 800-428-4442; email: www.firestonesp.com; or acceptable equal.

2.02 BEDDING AND COVER MATERIAL

A. Bedding and cover material shall be as specified in Section 02316.

PART 3 EXECUTION

3.01 EARTHWORK

A. See Sections 02315 and 02316 for structural excavation, and for fill and backfill.

B. Hand trim excavations for accurate placement of liner for tank base, as indicated on the drawings.

C. Sub-base for liner shall be graded and compacted to 95% of maximum density.

3.02 INSTALLATION - LINER

A. Verify that sub-base is ready to receive liner; and that dimensions and elevations are as indicated on the project drawings.

B. Liner shall be installed as indicated on the drawings and according to the manufacturer's written instructions and recommendations.

1. Liner shall be installed under the supervision of manufacturer.

3.03 INSTALLATION - DRAIN PIPE

A. Install pipe, fittings and accessories as indicated on the drawings and as directed; in accordance with appropriate ASTM standards and manufacturer's instructions. Seal joints watertight.

B. Install pipe to the alignment and slopes indicated on the drawings; with maximum variation from design alignment of 0.25 foot and from design elevations of 0.10 foot.

C. Pipe penetration through the liner shall be done as recommended by the line manufacturer.

3.04 FIELD QUALITY CONTROL

A. Perform field inspection and testing in accordance with Section 01400.

B. Liner installation shall be inspected by the District Inspector prior to backfilling; backfilling will be done only after it is authorized by the District Inspector.

C. If tests indicate the work does not meet specified requirements, repair or remove work, retest at no cost to the Owner.

3.05 PROTECTION

A. Protect liner material from damage or displacement until backfilling operation is in progress.

END OF SECTION

SECTION 02510

WATER DISTRIBUTION SYSTEM

PART 1 GENERAL

1.01 SECTION INCLUDES

A. Pipe and fittings for project water lines.

B. Butterfly Valves, Gate Valves, and appurtenant items.

C. Connecting project pipe lines to existing pipe lines.

1.02 RELATED SECTIONS

A. Section 02312 - Trenching for Pipe Work: Excavating, bedding, backfilling and compacting.

B. Section 02315 - Excavation: Excavating for structures and appurtenant items.

C. Section 02316 - Fill and Backfill: Bedding and backfilling.

D. Section 02515 - Disinfection of Water Distribution Systems: Disinfection of culinary water piping.

E. Section 03300 - Cast-in-Place Concrete: Concrete for thrust restraints.

1.03 REFERENCES

A. ASTM D 2774 - Standard Recommended Practice for Underground Installation of Thermoplastic Pressure Piping.

B. ASTM D 3139 - Standard Specification for Joints for Plastic Pressure Pipes using Flexible Elastomeric Seals.

C. AWWA C 104/A21.4 - Cement-Mortar Lining for Ductile Iron Pipe and Fittings for Water; America Water Works Association (AWWA/ANSI C104/A21.4).

D. AWWA C 105/A21.5 - Polyethylene Encasement for Ductile Iron Pipe Systems; America Water Works Association (AWWA/ANSI C105/A21.5).

E. AWWA C 111/A21.11 - Rubber-Gasket Joints for Ductile Iron Pressure Pipe and Fittings; America Water Works Association (AWWA/ANSI C111/A21.11).

F. AWWA C 151/A21.51 - Ductile Iron Pipe, Centrifugally Cast, for Water; America Water Works Association; (AWWA/ANSI C151/A21.51).

G. AWWA C 200 - Standard Specification for Welded Steel Pipe.

H. AWWA C 500 - Metal-Seated Gate Valves for Water Supply Service; American Water Works Association.

I. AWWA C 502 - Dry Barrel Fire Hydrants; America Water Works Association (AWWA/ANSI C502).

J. AWWA C 504 - Rubber Seated Butterfly Valves; America Water Works Association.

K. AWWA C 509 - Resilient-Seated Gate Valves for Water Supply Service; American Water Works Association.

L. AWWA C 600 - Installation of Ductile Iron Water Mains and Their Appurtenances: American Water Works Association (AWWA/ANSI C600).

M. AWWA C 900 - Polyvinyl Chloride (PVC) Pressure Pipe, 4 inch Through 12 inches, for Water Distribution; American Water Works Association.

N. **NSF 60. Drinking Water Treatment Chemicals - Health Effects.**

O. **NSF 61. Drinking Water System Components - Health Effects.**

P. Use the latest edition of the above reference standards as of the date of the project.

1.04 SUBMITTALS

A. See Section 01300 - Administrative Requirements, for submittal procedures.

B. Product Data: Provide data on pipe materials, pipe fittings, valves and accessories.

C. Manufacturer's Certificate: Certify that products meet or exceed specified requirements.

D. Project Record Documents: Record actual locations of pipe lines, valves, connections, thrust restraints, and invert elevations. Identify and describe unexpected variations to subsoil conditions or discovery of uncharted utilities.

1.05 QUALITY ASSURANCE

A. Perform Work in accordance with Owner's requirements as described herein.

1.06 DELIVERY, STORAGE, AND HANDLING

A. Deliver and store valves in shipping containers with labeling in place.

PART 2 PRODUCTS

2.01 WATER PIPE

A. Ductile Iron Pipe: AWWA C 151, as indicated:

1. Fittings: Ductile iron, standard thickness.

2. Joints:
   a. Push-On Joints: AWWA C 111, push-on type with rubber gasket.
   b. Mechanical Joints: AWWA C 111, mechanical joint type with gasket, bolts and nuts
   c. Flanged Joints: AWWA C 110, flanged type with gasket, bolts and nuts

3. Jacket: AWWA C105 polyethylene jacket.

B. PVC Pressure Pipe: AWWA C 900, Class 150 or 200, as indicated.

1. Fittings: AWWA C 111, ductile iron, standard thickness.

2. Joints: ASTM D 3139, compression gasket ring.

3. Tracer Wire: Magnetic detectable conductor, clear plastic covering; imprinted with “Water Line” in large letters, for PVC pipe.

C. Welded Steel Pipe: AWWA C 200, pipe and fittings as indicated.

D. Ductile iron fittings and accessories shall be made in America.

2.02 VALVES

A. Valves: Manufacturer's name and pressure rating marked on valve body.

B. Gate Valves Up To 3 Inches:

1. Brass or Bronze body, non-rising stem, inside screw, single wedge or disc, IPS ends, and handwheel.

2. Product: Powell U.S. Bronze Gate Valves, or accepted equal.

3. Substitutions: See Section 01600 - Product Requirements.

C. Gate Valves 3 Inches and Over:

1. AWWA C 509, iron body, bronze trim, non-rising stem with square nut, single wedge, resilient seat, mechanical joint or flanged ends as indicated, and cast-iron valve box.

2. Product: Mueller Resilient Seat Gate Valve, with appropriate type Pacific States Cast Iron Valve Box, or accepted equal.

D. Butterfly Valves From 2 Inches to 24 Inches:

1. AWWA C 504, iron body, bronze disc, resilient replacement seat, mechanical joint or flanged ends as indicated; manual worm gear operator with cast iron valve box as required.

2. Underground manual operators shall be totally enclosed, factory grease packed and sealed, bronze worm gear operators with self-locking gearing; stops shall be provided to prevent over travel of valve disc.

3. Valve operators shall be geared to close valves slowly. Number of turns to close valve from full open position shall be: 32 for 10-inch and smaller valves, 52 for 12-inch thru 16-inch valves, and 76 for 18-inch thru 24-inch valves. Closing times for larger valves shall be acceptable to the Engineer.

4. Product: Mueller “Lineseal III” Butterfly Valves, with appropriate type Pacific States Cast Iron Valve Box, or acceptable equal.

E. Combination Air-Vacuum Relief Valves.

1. Valves shall be designed to release large quantities of air from pipes during filling, admit large quantities of air into pipes during draining, and release small accumulations of air during normal operation of pipes.

2. Products: Valves shall be Heavy-Duty Combination Air Release Valves, of the size indicated, as manufactured by Valve and Primer Corporation (APCO).

F. Corporation Stops: shall be type for connecting to copper or polyethylene pipe; Mueller No. H- 15000, or acceptable equal, for up to 2-inch service line.

2.03 BEDDING AND COVER MATERIALS

A. Bedding: As specified in Sections 02312 and 02316.

B. Backfill: As specified in Sections 02312 and 02316.

2.04 ACCESSORIES

A. Service Clamps: shall be bronze, double-strap type; Mueller No. H-16134, or acceptable equal, for up to 2-inch service lines.

B. Concrete for Thrust Restraints and Collars: Concrete type specified in Section 03300.

2.05 NSF CERTIFICATION. All water distribution system components shall have NSF 61 certification.

PART 3 EXECUTION

3.01 EXAMINATION

A. Verify that water main and main line tee size, location, and invert are as indicated.

3.02 PREPARATION

A. Cut pipe ends square, ream pipe ends to full pipe diameter, remove burrs.

B. Remove scale and dirt on inside and outside before assembly.

C. Prepare pipe connections to equipment with flanges or mechanical joints.

3.03 TRENCHING

A. See Section 02312 and Sections 02315 and 02316 for additional requirements.

B. Hand trim excavation for accurate placement of pipe to elevations indicated.

C. Form and place concrete for pipe thrust restraints at each change of pipe direction. Place concrete to permit full access to pipe and pipe accessories. Provide required square feet of thrust restraint bearing on undisturbed subsoil as indicated on the drawings.

D. Backfill around sides and to top of pipe with backfill material, tamp in place and compact, then complete backfilling.

3.04 INSTALLATION - PIPE

A. Maintain separation of water main from sewer piping in accordance with State code.

B. Establish elevations of buried piping to ensure not less than four feet of cover over pipe; or as indicated on the drawings and as directed by the District Engineer.

C. Install pipe to indicated elevation to within tolerance of one inch.

D. Install ductile iron pressure pipe and fittings to AWWA C 600.

E. Install PVC pressure pipe and fittings to ASTM D 2774.

F. Install pipe lines to line and grade indicated.

G. Install pipe to allow for expansion and contraction without stressing pipe or joints.

H. Install access fittings to permit disinfection of water system performed under Section 02515.

I. Install trace wire above top of PVC pipe; coordinate with Section 02312.

3.05 INSTALLATION - VALVES

A. Set valves on concrete block or other acceptable solid bearing.

B. Center and plumb valve box over valve operating nut. Set box cover flush with finished grade.

3.06 CONNECTION TO EXISTING WATER LINE

A. Connection to existing water line shall be made where and as indicated on the drawings and as directed by the District Engineer. The sizes of pipe, fittings, valves, couplings and appurtenant items required to make the connection shall correspond to the sizes of existing pipes and project pipes.

B. Excavate to existing pipe line at the point of connection; determine actual conditions of existing pipe line and all fittings and appurtenant items required to make the connection; and have all materials needed on-site prior to any shut down or cutting into existing pipe line.

C. Connection to existing pipe line includes: removing and disposing of fittings and blocking at the end of the existing pipe as indicated and as directed; cleaning and preparing the end of existing pipe as required and as directed; furnishing and installing mechanical joint fittings of the appropriate size to connect the project pipe to the end of the existing pipe; and all appurtenant work required to complete the connection.

D. Connection to existing pipe line shall be made at such times and within the time limits and according to the directions as agreed to between the Contractor and the Owner.

3.07 FIELD QUALITY CONTROL

A. Clean and flush new water pipe as follows.

1. Take every precaution to prevent dirt, grease, and all other foreign matter from entering each length of pipe before making connections in field.

2. After each section of piping is installed, it shall be thoroughly cleaned to remove rocks, dirt, and other foreign matter by washing, sweeping, scraping or other methods that will not harm lining of pipe.

3. For safety and to prevent rocks and other foreign matter from entering pipe, all open ends of pipe shall be plugged when workmen are not on the job or in the immediate area.

4. All sections of water lines shall be completely flushed.
   a. Pipe 12-inch diameter and larger shall be flushed at a rate of 3.0 feet per second.
   b. Pipe under 12-inch diameter shall be flushed at a rate of 4.0 feet per second.

5. Water required for flushing and testing shall be furnished by the Contractor.

6. All temporary cross-connections for flushing and drainage shall be furnished, installed, and subsequently removed by the Contractor after completion of the operation.

B. Perform field inspection and testing in accordance with Section 01400.

C. Pipe installation shall be inspected by the District Engineer or Inspector prior to backfilling of trench; backfilling will be done only after it is authorized by the District Engineer or District Inspector.

D. Pressure test water piping to 1.25 times pipe line working pressure in psi.

E. If tests indicate Work does not meet specified requirements, remove Work, replace and retest at no cost to Owner.

END OF SECTION

SECTION 02515

DISINFECTION OF WATER DISTRIBUTION SYSTEM

PART 1 GENERAL

1.01 SECTION INCLUDES

A. Disinfection of project pipe lines specified in Section 02510.

B. Testing and reporting results.

1.02 RELATED SECTIONS

A. Section 02510 - Water Distribution System.

1.03 REFERENCES

A. AWWA B300 - Hypochlorite's; American Water Works Association.

B. AWWA B301 - Liquid Chlorine; American Water Works Association.

C. AWWA B302 - Ammonium Sulfate; American Water Works Association.

D. AWWA B303 - Sodium Chlorite; American Water Works Association.

E. AWWA C651 - Disinfecting Water Mains; American Water Works Association).

F. Use the latest edition of the above reference standards as of the date of the Project.

1.04 SUBMITTALS

A. See Section 01300 - Administrative Requirements, for submittal procedures.

B. Test Reports: Indicate results comparative to specified requirements.

C. Certificate: Certify that cleanliness of water distribution system meets or exceeds specified requirements.

D. Disinfection report:

1. Type and form of disinfectant used.
2. Date and time of disinfectant injection start and time of completion.
3. Test locations.
4. Initial and 24-hour disinfectant residuals (quantity in treated water) in ppm for each outlet tested.
5. Date and time of flushing start and completion.
6. Disinfectant residual after flushing in ppm for each outlet tested.

E. Bacteriological report:

1. Date issued, project name, and testing laboratory name, address, and telephone number.
2. Time and date of water sample collection.
3. Name of person collecting samples.

4. Test locations.

5. Initial and 24-hour disinfectant residuals in ppm for each outlet tested.

6. Coliform bacteria test results for each outlet tested.

7. Certification that water conforms, or fails to conform, to bacterial standards of State.

1.05 QUALITY ASSURANCE

A. Perform Work in accordance with AWWA C651.

B. Testing Firm: Company specializing in testing potable water systems, certified by governing authorities of Utah.

C. Submit bacteriologist's signature and authority associated with testing.

1.06 REGULATORY REQUIREMENTS

A. Conform to applicable code or regulation for performing the work of this Section.

B. Provide certificate of compliance from authority having jurisdiction indicating approval of water system.

PART 2 PRODUCTS

2.01 DISINFECTION CHEMICALS

A. Chemicals: AWWA B300, Hypochlorite, AWWA B301, Liquid Chlorine, AWWA B302, Ammonium Sulfate, and AWWA B303, Sodium Chlorite.

PART 3 EXECUTION

3.01 EXAMINATION

A. Verify that piping system has been cleaned, inspected, and pressure tested.

3.02 EXECUTION

A. Provide and attach required equipment to perform the work of this Section.

B. Introduce treatment into piping system.

C. Maintain disinfectant in system for 24 hours.

D. Flush, circulate, and clean until required cleanliness is achieved; use municipal domestic water.

E. Replace permanent system devices removed for disinfection.

F. Pressure test system to 1.25 times the system working pressure, in psi. Repair leaks and re test.

3.03 FIELD QUALITY CONTROL

A. Perform field inspection and testing in accordance with Section 01400.

B. Test samples in accordance with AWWA C651.

END OF SECTION

SECTION 02522

REINFORCED CONCRETE VALVE VAULT STRUCTURE

PART 1 GENERAL

1.01 SECTION INCLUDES

A. Reinforced concrete valve vault structure, including reinforced concrete vault, pipe, fittings, valves, and appurtenant items.

1.02 RELATED SECTIONS

A. Section 02315 - Excavating: Excavating for structures and appurtenant items.

B. Section 02316 - Fill and Backfill: Bedding and backfilling.

C. Section 02510 - Water Distribution System: Pipe, fittings, valves and appurtenant items.

D. Section 02515 - Disinfection of Water Distribution Systems: Disinfection of station piping.

E. Section 03300 - Cast-in-Place Concrete.

F. Section 05200 - Miscellaneous Metal Work.

G. Division 16 - Electrical Work.

1.03 REFERENCES

A. ASTM A 53 - Standard Specification for Pipe, Steel, Black and Hot-Dipped, Zinc-Coated, Welded and Seamless.

B. ASTM D2774 - Standard Recommended Practice for Underground Installation of Thermoplastic Pressure Piping.

C. ASTM D3035 - Standard Specification for Polyethylene (PE) Plastic Pipe (DR-PR) Based on Controlled Outside Diameter.

D. ASTM D3139 - Standard Specification for Joints for Plastic Pressure Pipes using Flexible Elastomeric Seals.

E. AWWA C104/A21.4 - Cement-Mortar Lining for Ductile-Iron Pipe and Fittings for Water; American Water Works Association.

F. AWWA C105/A21.5 - Polyethylene Encasement for Ductile-Iron Pipe Systems; American Water Works Association.

G. AWWA C111/A21.11 - Rubber-Gasket Joints for Ductile-Iron Pressure Pipe and Fittings; American Water Works Association.

H. AWWA C151/A21.51 - Ductile-Iron Pipe, Centrifugally Cast, for Water; American Water Works Association.

I. AWWA C504 - Rubber Seated Butterfly Valves; American Water Works Association.

J. AWWA C509 - Resilient-Seated Gate Valves for Water Supply Service; American Water Works Association; (ANSI/AWWA C509/C509a).

K. AWWA C600 - Installation of Ductile Iron Water Mains and Their Appurtenances; American Water Works Association.

L. AWWA C900 - Polyvinyl Chloride (PVC) Pressure Pipe, 4 in Through 12 in, for Water Distribution; American Water Works Association.

M. AWWA C901 - Polyethylene (PE) Pressure Pipe and Tubing, 4 in Through 63 in, for Water Distribution; American Water Works Association.

N. Use the latest issue of the above reference standards as of the date of the Project.

1.04 MEASUREMENT AND PAYMENT

A. See Section 02100 - Measurement and Payment.

1.05 SUBMITTALS

A. See Section 01300 - Administrative Requirements, for submittal procedures.

B. Product Data: Provide data on pipe materials, pipe fittings, valves and accessories.

C. Manufacturer's Certificate: Certify that products meet or exceed specified requirements.

D. Project Record Documents: Record actual locations of pipe lines, valves, connections, thrust restraints, and invert elevations. Identify and describe unexpected variations to subsoil conditions or discovery of uncharted utilities.

1.06 QUALITY ASSURANCE

A. Perform Work in accordance with Owner's requirements as described herein.

B. Manufacturer: Company specializing in manufacturing products specified in this section with at least three years of documented experience.

1.07 DELIVERY, STORAGE, AND HANDLING

A. Deliver and store valves and appurtenant items in shipping containers with labeling in place.

PART 2 PRODUCTS

2.01 MATERIALS

2.01 REINFORCED CONCRETE VAULT

A. Reinforced Concrete Vault. The reinforced concrete vault is shown on the drawings as constructed of poured-in-place concrete; but a precast reinforced concrete vault may be provided at the option of the Contractor.

1. The vault shall be sized to adequately accommodate all valves, pipe, fittings and appurtenant items to be enclosed in the vault; and the vault dimensions shall be acceptable to the District Engineer.

2. Poured-in-Place Concrete. A poured-in-place reinforced concrete vault, of the size indicated on the construction drawings, may be constructed; which shall conform to applicable requirements of Section 03300.

3. Precast Concrete. A precast reinforced concrete vault of equal dimensional and strength characteristics, as determined by the District Engineer during shop drawing review, may be provided. Precast vault shall have wall thickness of 9-inch minimum, bottom slab thickness of 6-inch minimum, and top slab thickness of 9-inch minimum; designed for H-20 highway loading.

a. Precast vault shall conform to ASTM C 858; and shall be as manufactured by Amcor-White, Inc., Dura-Crete, or other manufacturers acceptable to the District Engineer.

4. Reinforcement. Reinforcing steel shall be as specified in Section 03300, using Grade 60 bar of the size(s) shown on the construction drawings.

B. Ladder: fabricated steel ladder as indicated on the plans; with support angles as required, “Safety-T-Climb” system, and all required appurtenances.

1. Steps: steps may be used as approved by the District Engineer. Steps shall be formed, copolymer polypropylene-encased, steel rungs; 3/4-inch diameter minimum. Cast-in-place or vibrate into green concrete. Model PSI-FF manhole steps, manufactured by M. A. Industries, Inc., or acceptable equal.

C. Access Doors: The access door leaf and channel frame, with strap anchors, shall be constructed of Type 304 stainless steel; designed for H-20 highway loading. Doors shall be provided with 316 stainless steel hardware throughout; including all parts of the latch and lifting mechanism assemblies, hold open arms and guides, and all brackets, hinges, pins and fasteners. The doors shall have recessed hasp covered by a hinged lid flush with the surface of the door.

1. The access doors shall be Type F Access Doors as manufactured by The Bilco Company, or companies acceptable to the District Engineer, of the size indicated on the drawings. The manufacturer shall guarantee the door against defects in material and workmanship for a period of five years.

D. Gravity Ventilator: The gravity ventilator shall be constructed of spun aluminum, of the size indicated on the drawings, with a corrosion-resistant bird screen. The gravity ventilator shall be a Model PR Ventilator, as manufactured by Loren Cook Company, or acceptable equal.

E. Proprietary Items. Provide proprietary items of the type, size and manufacture noted on the drawings or as required to complete the work, or acceptable equals.

F. Miscellaneous Metal Work. Furnish and erect miscellaneous metal work as required to complete the pressure regulating station, as described herein and as shown on the drawings.

1. Codes. Specifications for the Design, Fabrication and Erection of Structural Steel for Buildings of the American Institute of Steel Construction shall govern the work. Welding shall be done in accordance with applicable American Welding Society Standards.

2. Substitutions. Substitutions of sections or modifications of details, or both, and the reasons therefore shall be submitted for acceptance by the District Engineer.

3. Responsibility for Errors. The Contractor shall be responsible for all errors of detailing, fabrication, erection, and correct fitting of the miscellaneous metal work.

4. Materials. Material shall conform to their respective specifications as follows:
   a. Bolts and Nuts: ASTM Standard A-307
   b. Gray Iron Castings: A-48 Class 40 or Better
   c. Structural Steel: ASTM Standard A-36
   d. Washers: ASTM Standard B-27.2, Type B
   e. Miscellaneous Items: Miscellaneous items shall be as indicated on the drawings or as required.

G. Painting. All exposed pipe, valves, fittings, and metal work inside of the station shall be painted with either: four coats of alkyd paint, Painting System II (Steel Structural Painting Council - Specification No. 2); or four coats of phenolic paint, Painting System III (Steel Structural Painting Council - Specification No. 3). Painting shall include surface preparation, pretreatment, primer coat, inter-mediate coats, and finish coat, as specified; with total dry film thickness not less than 4.0 mils. Aluminum surfaces which will be in contact with concrete after erection shall be coated with bituminous mastic coating, SSPC-Paint 12, prior to erection.

2.02 VALVE VAULT PLUMBING

A. Pipe and Fittings.

1. Ductile Iron Pipe: AWWA C151: See Section 02510. Exposed pipe and fittings shall not be coated with coal tar pitch varnish; but shall be painted as specified herein.

2. Copper Tubing: ASTM B 88, Type K, annealed: See Section 02510.

3. Galvanized Steel Pipe: ASTM A 53: Galvanized steel pipe shall be Schedule 80, seamless or welded pipe, with threaded ends. Fittings shall be 150 lb. galvanized malleable iron banded type, with screwed ends. Unions shall be galvanized railroad type with ground brass-to-iron seats.

B. Valves.

1. Manufacturer's name and pressure rating marked on valve body.

2. Gate Valves Up To 3 Inches:
   a. Brass or Bronze body, non-rising stem, inside screw, single wedge or disc, IPS ends, and handwheel.
   b. Product: Powell U.S. Bronze Gate Valves, or accepted equal.
   c. Substitutions: See Section 01600 - Product Requirements.

3. Gate Valves 3 Inches and Over:
   a. AWWA C509, iron body, bronze trim, non-rising stem with square nut, single wedge, resilient seat, flanged ends as indicated, and cast-iron valve box.
   b. Product: Mueller Resilient Seat Gate Valve, with handwheel and position indicators, or accepted equal.

4. Butterfly Valves From 2 Inches to 24 Inches:
   a. AWWA C504, iron body, bronze disc, resilient replacement seat, flanged ends as indicated, and manual worm gear operator.
   b. Valve operator shall be geared to close valves slowly. Number of turns to close valve from full open position shall be: 32 turns for 10-inch and smaller valves, 52 turns for 12-inch thru 16-inch valves, and 76 turns for 18-inch thru 24-inch valves. Closing times for larger valves shall be accepted by the Engineer.
   c. Product: Mueller "Lineseal III" Butterfly Valve with appropriate type manual worm gear operator.

5. Combination Air-Vacuum Release Valves.
   a. Valves shall be designed to release large quantities of air from pipes during filling, admit large quantities of air into pipes during draining, and release small accumulations of air during normal operation of pipes.
   b. Valves shall be equal in quality to "Heavy-Duty Combination Air Release Valves, No. 143C", as manufactured by Valve and Primer Corp. (APCO); and shall meet the provisions of these specifications.

6. Hose Gate Valves.
   a. Hose gate valves shall be high grade brass with handwheel, inside screw ends, rising stem, screwed bonnet, taper wedge double disc. Valve shall be designed to operate at 200 psi water pressure.
   b. Hose gate valves shall be equal to Powell U.S. Bronze Hose Gate Valve No. 527, or acceptable equal.

C. Miscellaneous Items.

1. Flanged Coupling Adapters. The flanged coupling adapters shall be Rockwell Type 912 or Type 913, or other couplings acceptable to the District Engineer, with anchor studs as recommended by the manufacturer; for connecting ductile iron pipe to flanged valves, equipment and fittings.

2. Mechanical Couplings. The mechanical couplings shall be Dresser, Rockwell, or other couplings acceptable to the District Engineer; for connecting the size and type of pipe shown on the drawings. Couplings exposed to soil shall be primed and coated with a 1/4-inch layer of coal tar or approved rust preventing wax compound.

3. Gauges. Gauges shall be as shown on the drawings and of the size and quality equal to or better than United States Gauge "A" Line, Figure No. 5000. Gauges shall have a range of 0 to 350 psi.

4. Gauge Cocks. Gauge cocks shall be of high-grade bronze with tee head; designed for 200 psi water pressure, and factory-tested to 300 psi; Crane Nos. 708, 712, 744, or accepted equal.

5. Service Clamps: shall be bronze, double-strap type; Mueller No. H-16134, or acceptable equal, for up to 2-inch service lines.

6. Other Items. Other miscellaneous materials shall be as indicated on the drawings.

D. Hangers, Supports and Blocks.

1. Provide all hangers, supports, clamps, guides, sleeves, inserts, anchors and other such devices required for hanging or supporting pipe, preserving alignment, prevention of movement, passage of pipe through walls and floors, or securing pipe in any manner. The required number, location and detail of such items may or may not be indicated on the drawings; but, in any case, such work shall be provided as work incidental to furnishing and installing any type of pipe, fittings and appurtenances, and no extra payment will be made for this work.
   a. Piping shall be supported or suspended in such manner as to prevent sagging or over stressing of pipe, valves, fittings or connections; and so that no pipe, fittings, valves or other items transfer load or strain to equipment of any kind.

2. Supports.
   a. Concrete supports shall be installed under pipe and valves wherever shown on the drawings. Concrete supports shall be neatly constructed and finished, as indicated on the drawings and as directed by the Engineer. No supports shall be made until all pipe is in its final position.
   b. All other pipe supports shall be of the adjustable type of the style and size recommended by the manufacturer; and shall be located as indicated on the drawings and as directed by the Engineer. Floor flanges shall be of the size required to fit the pipe attached to the saddle support and as recommended by the manufacturer. Adjustable pipe supports shall be used as kick blocks for pipe in open locations.

3. Blocks. Concrete thrust blocks shall be used wherever shown on the drawings or where thrust is great enough, in the Engineer's opinion, to cause movement of the piping.

E. Pressure Transducer. Pressure transducer shall be a XPRO Stainless Steel Pressure Transducer, as manufactured by Honeywell. Transducer shall be supplied with cable to extend to at least 8 feet above top of structure; and all mounting brackets and appurtenant items to complete installation.

F. Miscellaneous. Miscellaneous appurtenant items shall be as indicated on the drawings or as required to complete the valve box.

2.03 BEDDING AND BACKFILL MATERIALS

A. Bedding: As specified in Sections 02315 and 02316.

B. Backfill: As specified in Sections 02315 and 02316.

2.04 ACCESSORIES

A. Concrete for Thrust Restraints: Concrete type specified in Section 03300.

2.05 ELECTRICAL WORK

A. All electrical equipment and wiring devices shall comply with the requirements of Division 16 of these specifications.

B. Propeller Roof Ventilator: The propeller roof ventilator shall be constructed of spun aluminum, with a cast aluminum propeller and a corrosion-resistant bird screen. The ventilator shall have a low silhouette design. The ventilator shall be a Type AQD Propeller Roof Ventilator, as manufactured by Loren Cook Company, or acceptable equal.

PART 3 EXECUTION

3.01 EXAMINATION

A. Verify that water main size, location, and invert elevations are as indicated on the drawings.

B. Verify that built-in items are in proper location, and ready for roughing into Work.

C. Verify excavation for valve box is correct.

3.02 PREPARATION

A. Cut pipe ends square, ream pipe ends to full pipe diameter, remove burrs.

B. Remove scale and dirt on inside and outside before assembly.

C. Prepare pipe connections to equipment with flanges or mechanical joints.

3.03 EXCAVATING

A. See Section 02312 and Sections 02315 and 02316 for additional requirements.

B. Hand trim excavation for accurate placement of pipe to elevations indicated.

C. Where native material encountered at foundation depth of structures is considered unsuitable by the District Inspector, the unsuitable material shall be removed and replaced by appropriate borrow material; and compacted to required densities, to the limits directed by District Inspector.

D. Form and place concrete for pipe thrust restraints at each change of pipe direction. Place concrete to permit full access to pipe and pipe accessories. Provide required square foot of thrust restraint bearing on undisturbed subsoil as indicated on the drawings.

E. Backfill around sides and to top of pipe and concrete structure with backfill material, tamp in place and compact, then complete backfilling as described in appropriate sections of these specifications, and as directed by the District Inspector.

F. Excess Material. Unsatisfactory and excess excavated materials shall be removed from the work site and legally disposed of.

3.04 CONSTRUCTION - REINFORCED CONCRETE STRUCTURE.

A. Construct the concrete structure for the valve box at the location indicated on the drawings and as directed by the District Engineer; in accordance with the details shown on the construction drawings and as specified herein.

B. Concrete Work. Comply with requirements of Section 03300, for placement, consolidation, finishing and protection of cast-in-place concrete.

1. Precast Concrete Vault. Precast concrete vault shall be installed level and plumb, in accordance with the manufacturer's written instructions and recommendations.

C. Pressure Transducer. Pressure transducer shall be mounted where and as indicated on the drawings and as directed by the District Inspector. The pressure transducer shall be installed according the manufacturer’s written instructions and recommendations. The cable shall be installed and securely attached along the wall of the structure; with a loop left at the top of the structure. The pressure transducer will be connected to the District’s SCADA system by the District’s contractor.

D. Access Door: Install according to manufacturer’s written instructions and recommendations.

E. Gravity Ventilator: Install on concrete curb wall according to manufacturer's written instructions and recommendations.

F. Miscellaneous Metal Work.

1. Miscellaneous metal work shall comply with requirements of Section 05200.

2. Miscellaneous metal work shall be fabricated and assembled in the shop to the greatest extent possible.

3. Miscellaneous metal work shall be erected in conformity with AISC Code of Standard Practice.

G. Miscellaneous Items. Miscellaneous items shall be installed as required for the completion of the work, as indicated on the drawings and as directed by the District Inspector or Engineer.

H. Testing. Upon completion of the structure, the Contractor shall conduct tests to ensure watertightness of the structure. Methods of testing and methods and materials for repair, if required, shall be as acceptable to the District Inspector or District Engineer.

3.05 INSTALLATION - PLUMBING

A. All pipe, fittings, valves, equipment and appurtenant items, together with supports and anchors, shall be installed as specified herein and as indicated on the drawings; in conformity with State plumbing codes.

B. Equipment shall be installed as shown on the drawings, and in accordance with accepted manufacturer's written instructions.

C. All material and workmanship shall conform to applicable requirements of the Utah Plumbing Code.

D. Install pipe to indicated elevation to within tolerance of one inch.

E. Install ductile iron piping and fittings to AWWA C600.

F. Install pipe to allow for expansion and contraction without stressing pipe or joints.

G. Install access fittings to permit disinfection of water system performed under Section 02515.

H. Set valves on concrete block or other acceptable solid bearing.

I. After plumbing system has been installed and completed, it shall be tested and disinfected as specified herein; including an operating test for acceptance of the work. Tests shall be performed in the presence of the District Engineer or his authorized representative.

3.06 INSTALLATION - ELECTRICAL

A. All electrical equipment, wiring devices and appurtenances items shall be installed as specified in Division 16 of these specifications.

B. Propeller Roof Ventilator: Install on concrete curb wall according to manufacturer's written instructions and recommendations.

3.07 FIELD QUALITY CONTROL

A. Perform field inspection and testing in accordance with Section 01400.

B. Pressure test water piping to 1.25 times pipe line working pressure in psi.

1. If tests indicate that piping does not meet specified requirements, remove piping as required, replace and retest at no cost to Owner.

C. The structures shall be tested using acceptable methods to demonstrate integrity of installed materials and construction procedures. Method and material for repair shall be as acceptable to the District Engineer.

1. Structures shall be tested immediately after assembly and backfilling.

2. Plug all lift holes with an acceptable non-shrink grout.

B. If the structures fail initial test, make necessary repairs on the outside of the structure with non-shrink grout, or other acceptable material. Structures shall be retested until satisfactory test is obtained.

END OF SECTION

SECTION 02620

HYDRAULIC STRUCTURES TESTING AND DISINFECTION

PART 1 GENERAL

1.01 REQUIREMENTS

A. The CONTRACTOR shall perform all cleaning, flushing, and testing, of all hydraulic structures and appurtenant piping, and disinfection of all hydraulic structures and appurtenant piping for potable water, including conveyance of test water from District-designated source to point of use, and including all disposal thereof, complete and acceptable, all in accordance with the requirements of the Contract Documents.

1.02 REFERENCE SPECIFICATIONS, CODES, AND STANDARDS

A. Commercial Standards:

ANSI/AWWA B300	Hypochlorite's
ANSI/AWWA B301	Liquid Chlorine
ANSI/AWWA C652	Disinfection of Water-Storage Facilities
APHA/AWWA/WPCF	Standard Methods for the Examination of Water & Wastewater (16th ed.)

1.03 CONTRACTOR SUBMITTALS

A. A testing schedule, including proposed plans for water conveyance, control, disposal, and disinfection shall be submitted in writing for approval a minimum of 48 hours before testing is to start.

PART 2 PRODUCTS

2.01 MATERIALS REQUIREMENTS

A. Temporary valves, bulkheads, or other water control equipment and materials shall be as determined by the CONTRACTOR subject to the DISTRICT ENGINEER'S review. No materials shall be used which would be injurious to the construction or its future function.

B. Chlorine for disinfection shall be in the form of liquid chlorine, sodium hypochlorite solution, or calcium hypochlorite granules or tablets.

1. Liquid chlorine shall be in accordance with the requirements or ANSI/AWWA B301.
   a. Liquid chlorine shall be used only:
      (1) in combination with appropriate gas flow chlorinators and ejectors;
      (2) under the direct supervision of an experienced technician; and
      (3) when appropriate safety practices are observed.

2. Sodium hypochlorite and calcium hypochlorite shall be in accordance with the requirements of ANSI/AWWA B300.

PART 3 EXECUTION

3.01 GENERAL

A. Water for testing and disinfecting will be furnished by the DISTRICT; however, the CONTRACTOR shall make all necessary provisions for conveying the water from the OWNER-designated source to points of use.

1. Water for testing and disinfecting the tank will be provided through a separate contract to be completed prior to completion of this project.

B. All hydraulic structures and appurtenant pressure piping including potable water shall be tested.

1. Disinfection shall be accomplished by chlorination.

2. All chlorinating and testing operations shall be done in the presence of the DISTRICT ENGINEER.

C. In the case of a water storage tank, testing and disinfecting operations shall be combined.

D. Disinfection operations shall be scheduled by the CONTRACTOR as late as possible during the contract time period so as to assure the maximum degree of sterility of the facilities at the time the WORK is accepted by the OWNER.

1. Bacteriological testing shall be performed by a certified testing laboratory acceptable to the DISTRICT ENGINEER. Results of the bacteriological testing shall be satisfactory to the State Department of Health or another appropriate regulatory agency.

E. After testing and disinfecting have been completed, release of water from structures shall be acceptable to the DISTRICT ENGINEER.

3.02 PRELIMINARY CLEANING AND FLUSHING

A. General:

1. Testing shall be performed prior to backfilling, except where otherwise acceptable to the DISTRICT ENGINEER.

2. Testing shall not be performed sooner than 14 days after all portions of structure walls and associated roof systems have been completed.

3. The test shall consist of filling the structure with water to the maximum operating water surface. The rate of filling shall not exceed 24 inches of depth per day.

4. All visible leakage shall be repaired.

B. Leakage Test and Repairs:

1. After the structure has been filled, the water loss leakage test shall be performed as follows:
   a. An initial water level reading shall be made.
   b. Seven days following the initial reading, a second reading shall be made.
   c. The structure shall be considered to have passed the test if water loss during the 7-day period, as computed from the two water level readings, does not exceed 0.2 percent of the total volume of water in the structure, after allowance is made for evaporation loss.
   d. If intermediate readings or observed leakage indicate that the allowable leakage will be exceeded, the test may be terminated before the end of the 7-day period and appropriate action taken to correct the problem before commencing a new 7-day test period.

2. Should the structure fail to pass the test, the test shall be repeated for up to 3 additional 7-day test periods.

3. If, at the end of 28 days, the structure still fails to pass the leakage test, the CONTRACTOR shall empty the structure as acceptable to the ENGINEER and shall examine the interior for evidence of any cracking or other conditions that might be responsible for the leakage.

4. Any cracks shall be “vee’d” and sealed with polyurethane sealant in accordance with Section 03300 – Cast-In-Place Concrete.

5. Any evidence of leakage shall be repaired.

6. Following these operations, the CONTRACTOR shall again test the hydraulic structure. The structure will not be accepted as completed until the water loss leakage test is passed and all viable leakage repaired.

7. In the case of a water storage tank, the retesting shall again be combined with disinfection, exclusive of the spraying operation.

3.03 TESTING OF APPURTENANT PIPING

A. Piping appurtenant to hydraulic structures shall be tested as specified in Section 02643 - Water Pipeline Testing and Disinfection.

3.04 DISINFECTION OF HYDRAULIC STRUCTURES AND APPURTENANT PIPELINES

A. All hydraulic structures which store or convey potable water shall be disinfected by chlorination. Chlorination of hydraulic structures shall be performed in accordance with the requirements of ANSI/AWWA C652 using a combination of chlorination Methods 2 and 3 as modified herein.

B. Chlorination:

1. A strong chlorine solution (about 200 mg/l) shall be sprayed on all interior surfaces of the structure.

2. Following this, the structure shall be partially filled with water to a depth of approximately one foot.
   a. During the partial filling operation, a chlorine-water mixture shall be injected by means of a solution-free chlorinating device in such a way as to give a uniform chlorine concentration during the entire filling operation.
   b. The point of application shall be such that the chlorine solution will mix readily with the inflowing water.
   c. The dosage applied to the water shall be sufficient to provide a chlorine residual of at least 5 mg/l upon completion of the partial filling operation.
   d. Precautions shall be taken to prevent the strong chlorine solution from flowing back into the lines supplying the water.

3. After the partial filling has been completed, sufficient water shall be drained from the lower ends of appurtenant piping to ensure filling the lines with the heavily chlorinated water.

C. Retention Period:

1. Chlorinated water shall be retained in the partially filled structure and appurtenant piping long enough to destroy all non-spore-forming bacteria, and in any event, for at least 24 hours.

2. After the chlorine treated water has been retained for the required time, the free residual in the structure and appurtenant piping shall be al least 2 mg/l.

3. All valves shall be operated while the lines are filled with the heavily chlorinated water.

D. Final Filling Structure:

1. After the free chlorine residual has been checked, and has been found to satisfy the above requirement, the water level in the structure shall be raised to its final elevation by addition of potable water.

2. Before final filling is commenced, the quantity of heavily chlorinated water remaining in the structure after filling the piping shall, unless otherwise acceptable to the DISTRICT ENGINEER, be efficient, when the water level is raised to its final elevation to produce a free chlorine residual of between 1 and 2 mg/l.

3. After the structures have been filled, the strength of the chlorinated water shall be determined.

a. If the free chlorine residual is greater than 2 mg/l, the structure shall be partially emptied and additional potable water added.
b. In no case shall water be released prior to the expiration of the required retention period.

3.05 BACTERIOLOGICAL SAMPLING AND TESTING

A. Disinfected water storage facilities shall be sampled and tested in accordance with ANSI/AWWA C652.

3.06 CONNECTIONS TO EXISTING SYSTEM

A. Where connections are to be made to an existing potable water system, the interior surfaces of all pipe and fittings used in making the connections shall be swabbed or sprayed with a one percent hypochlorite solution before they are installed.

B. Thorough flushing shall be started as soon as the connection is completed and shall be continued until all discolored water is eliminated.

END OF SECTION

SECTION 02643

WATER PIPELINE TESTING AND DISINFECTION

PART 1 GENERAL

1.01 REQUIREMENTS

A. The CONTRACTOR shall perform flushing and testing of all pipelines and appurtenant piping, and disinfection of all pipelines and appurtenant piping for potable water, complete; including conveyance of test water from OWNER-designated water source to point of use and all disposal thereof, all in accordance with the requirements of the Contract Documents.

1.02 RERFERENCE SPECIFICATIONS, CODES, AND STANDARDS

A. Commercial Standards:

1.	ANSI/AWWA B300	Hypochlorite's
2.	ANSI/AWWA B301	Liquid Chlorine
3.	ANSI/AWWA C651	Disinfecting Water Mains

1.03 CONTRACTOR SUBMITTALS

A. A testing schedule, including proposed plans for water conveyance, control, disposal, and disinfection shall be submitted in writing for approval a minimum of 48 hours before testing is to start.

PART 2 PRODUCTS

2.01 MATERIALS REQUIREMENTS

A. All test equipment, chemicals for chlorination, temporary valves, bulkheads, or other water control equipment and materials shall be determined and furnished by the CONTRACTOR subject to the DISTRICT ENGINEER'S review. No materials shall be used which would be injurious to the construction or its future function.

B. Chlorine for disinfection shall be in the form of liquid chlorine, sodium shall be in the form of liquid chlorine, sodium hypochlorite solution, or calcium hypochlorite granules or tablets.

C. Liquid chlorine shall be in accordance with the requirements of ANSI/AWWA B301. Liquid chlorine shall be used only:

1. In combination with appropriate gas flow chlorinators and ejectors;

2. Under the direct supervision of an experienced technician;

3. When appropriate safety practices are observed.

D. Sodium hypochlorite and calcium hypochlorite shall be in accordance with the requirements of ANSI/AWWA B300.

PART 3 EXECUTION

3.01 GENERAL

A. Unless otherwise provided herein, water for testing and disinfecting water pipelines will be furnished by the OWNER; however, the CONTRACTOR shall make all necessary provisions for conveying the water from the OWNER-designated water source to the points of use.

B. All pressure pipelines shall be tested. Disinfection shall be accomplished by chlorination. All chlorinating and testing operations shall be performed in the presence of the DISTRICT ENGINEER.

C. Disinfection operations shall be scheduled by the CONTRACTOR as late as possible during the contract time period so as to assure the maximum degree of sterility of the facilities at the time the WORK is accepted by the OWNER.

D. Bacteriological testing shall be performed by a certified testing laboratory approved the OWNER and at the expense of the CONTRACTOR. Results of the bacteriological testing shall be satisfactory with the State Department of Health or other appropriate regulatory agency.

3.02 HYDROSTATIC TESTING OF PIPELINES

A. Prior to hydrostatic testing, all pipelines shall be flushed or blown out as appropriate.

B. The CONTRACTOR shall test all pipelines either in sections or as a unit.

1. No section of the pipeline shall be tested until all field-placed concrete or mortar has attained an age of 14 days.

2. The test shall be made by closing valves when available, or by placing temporary bulkheads in the pipe and filling the line slowly with water.
   a. The CONTRACTOR shall be responsible for ascertaining that all test bulkheads are suitably restrained to resist the thrust of the test pressure without damage to, or movement of the adjacent pipe.
   b. Any unharnessed sleeve-type couplings, expansion joints, or other sliding joints shall be restrained or suitably anchored prior to the test, to avoid movement and damage to piping and equipment.

C. The CONTRACTOR shall provide sufficient temporary air tapings in the pipelines to allow for evacuation of all entrapped air in each pipe segment to be tested.

1. After completion of the tests, such taps shall be permanently plugged.

2. Care shall be taken to see that all air vents are open during filling.

D. The pipeline shall be filled at a rate which will not cause any surges or exceed the rate which will not cause any surges or exceed the rate at which the air can be released through the air valves at a reasonable velocity and all the air within the pipeline shall be properly purged.

E. After the pipeline or section thereof has been filled, it shall be allowed to stand under a slight pressure for at least 24 hours to allow the concrete or mortar lining, as applicable, to absorb what water it will and to allow the escape of air from any air pockets.

1. During this period, bulkheads, valves, and connections shall be examined for leaks.

2. If leaks are found, corrective measures satisfactory to the ENGINEER shall be taken.

F. The hydrostatic test shall consist of holding the test pressure on the pipeline for a period of 4 hours.

1. The test pressure for distribution and transmission pipelines shall be 125 percent of the pipe pressure class shown or specified measured at the lowest point of the pipeline section being tested.

2. The test pressure for yard piping shall be as shown or specified on the Piping Schedule measured at the lowest point of the pipeline section being tested.

3. No pressure test will be required for a reservoir overflow line.

4. All visible leaks shall be repaired in a manner acceptable to the DISTRICT ENGINEER.

G. The maximum allowable leakage:

1. For distribution and transmission pipelines, the maximum allowable leakage shall be 10 U.S. gallons per inch of diameter per mile of pipe per 24 hours for pipe with 40 foot or greater lengths between joints and with rubber gasketed joints; and 20 U.S. gallons per inch of diameter per mile of pipe per 24 hours for pipe with 20 foot or less lengths between joints and with rubber gasketed joints.

2. The maximum leakage for yard piping shall be as shown on the Piping Schedule.

3. Pipe with welded joints shall have no leakage.

4. In the case of pipelines that fail to pass the prescribed leakage test, the CONTRACTOR shall determine the cause of the leakage, shall take corrective measures necessary to repair the leaks, and shall again test the pipelines.

3.03 DISINFECTING PIPELINES

A. General: All potable water pipelines except those appurtenant to hydraulic structures shall be disinfected in accordance with the requirements of ANSI/AWWA C651 using the Continuous Feed Method as modified herein.

B. Chlorination:

1. A chlorine water mixture shall be uniformly introduced into the pipeline by means of a solution free chlorinating device.

2. The chlorine solution shall be introduced at one end of the pipeline through a tap in such a manner that as the pipeline is filled with water, the dosage applied to the water entering the pipe shall be approximately 50 mg/l.

3. Care shall be taken to prevent the strong chlorine solution in the line being disinfected from flowing back into the line supplying the water.

C. Retention Period:

1. Chlorinated water shall be retained in the pipeline long enough to destroy all no-spore forming bacteria.

2. This period shall be at least 24 hours.

3. After the chlorine treated water has been retained for the required time, the free chlorine residual at the pipeline extremities and at other representative points shall be a least 25 mg/l.

D. Chlorinating Valves: During the process of chlorinating the pipelines, all valves and other appurtenances shall be operated while the pipeline is filled with the heavily-chlorinated water.

E. Final Flushing:

1. After the applicable retention period, the heavily chlorinated water shall be flushed from the pipeline until chlorine measurements show that the concentration in the water leaving the pipeline is no higher than that generally prevailing in the system or is acceptable for domestic use.

2. If there is any question that the chlorinated discharge will cause damage to the environment, a reducing agent shall be applied to the water to neutralize thoroughly the chlorine residual remaining in the water.

F. Bacteriological Testing:

1. After final flushing and before the pipeline is placed in service, a sample, or samples shall be collected from the end of the line, and shall be tested for bacteriological quality in accordance with the requirements of the State Department of Health or other appropriate regulatory agency.

2. For this purpose, the pipe shall be re-filled with fresh potable water and left for a period of 24 hours before any sample is collected.

3. Should the initial disinfection treatment fail to produce satisfactory bacteriological test results, the disinfection procedure shall be repeated until acceptable results are obtained.

3.04 CONNECTIONS TO EXISTING SYSTEM

A. Where connections are to be made to an existing potable water system, the interior surfaces of all pipe and fittings used in making the connections shall be swabbed or sprayed with a one percent hypochlorite solution before they are installed.

B. Thorough flushing shall be started as soon as the connection is completed and shall be continued until discolored water is eliminated.

END OF SECTION

SECTION 02684

CULINARY WATER STORAGE TANK

PART 1 GENERAL

1.01 SECTION INCLUDES

A. Culinary water storage Tank.

1.02 RELATED SECTIONS

A. Section 02300 - General Excavation: General excavating, embankments and compacting.

B. Section 02312 - Trenching for Pipe Work: Excavating, bedding, backfilling and compacting.

C. Section 02315 - Excavation: Excavating for structures and appurtenant items.

D. Section 02316 - Fill and Backfill: Bedding and backfilling.

E. Section 02510 - Water Distribution System.

F. Section 02380 - Rubber Liner for Tank Base.

G. Section 02620 - Hydraulic Structures Testing and Disinfection.

H. Section 05200 - Miscellaneous Metalwork.

I. Section 03300 - Cast-in-Place Concrete: Concrete for thrust restraints.

J. Section 09900 - Paints and Coatings.

1.03 REFERENCES

A. AWWA C 220 - Stainless-Steel Pipe, 4-in and Larger; America Water Works Association (AWWA/ANSI C220).

B. See Section 02510 for additional water system materials.

C. UT Admin Code R309-545. Facility Design and Operations: Drinking Water Storage Tank.

D. NSF 60. Drinking Water Treatment Chemicals - Health Effects.

E. NSF 61. Drinking Water System Components - Health Effects.

1.04 SUBMITTALS

A. See Section 01300 - Administrative Requirements, for submittal procedures.

B. Product Data: Provide data on pipe materials, pipe fittings, valves and accessories.

C. Manufacturer's Certificate: Certify that products meet or exceed specified requirements.

D. Project Record Documents: Record actual locations of pipe lines, valves, connections, thrust restraints, and invert elevations. Identify and describe unexpected variations to subsoil conditions.

1.05 QUALITY ASSURANCE

A. Perform Work in accordance with Owner's requirements as described herein.

1.06 DELIVERY, STORAGE, AND HANDLING

A. Deliver and store materials as recommended by the manufacturers.

PART 2 PRODUCTS

2.01 CONCRETE MATERIALS

A. Concrete water storage tank shall be constructed as specified in Section 03300.

2.02 EMBANKMENT AND BACKFILL MATERIALS

A. Embankment and Backfill Materials: As specified in Sections 03200, 02312, 02315 and 02316.

2.03 MISCELLANEOUS STRUCTURES

A. Miscellaneous structures shall be constructed as specified in Section 02522.

2.04 RUBBER LINER FOR TANK BASE

A. The rubber liner for the tank base shall be as specified in Section 02380.

2.05 PLUMBING

A. Pipe and Fittings shall conform to requirements of Section 02510 and 15145.

PART 3 EXECUTION

3.01 EXAMINATION

A. Verify that location and elevations are as indicated.

3.02 PREPARATION

A. Clear and grub the work area, as required; and dispose of cleared material in an acceptable manner.

B. Remove topsoil material as described in Section 02300.

3.03 EARTHWORK

A. See Sections 02300, 02312, 02315 and 02316 for additional requirements.

B. See Section 02510 for installation of pipe lines.

C. Excavate for storage tank and structures to the limits indicated on the drawings and as directed by the Engineer; conforming to the requirements of Section 02300.

D. Compact sub-base as described in Section 02315.

E. Construct embankments as indicated on the drawings and as described in Section 02300.

F. Furnish, place and compact gravel base, as indicated on the drawings, for tank lining.

3.04 LINING FOR TANK BASE

A. See Section 02380 for material and construction requirements.

3.05 REINFORCED CONCRETE WATER TANK

A. The reinforced concrete water storage tank shall be constructed as indicated on the drawings.

1. Concrete work shall be done as specified in Sections 03100, 03151, 03290 and 03300 of these specifications.

2. Reinforcement shall conform to the requirements of Section 03200.

B. Miscellaneous metal work shall conform to the requirements of Section 05200.

C. Painting shall be done as specified in Section 09900 and as indicated on the drawings.

D. Plumbing for the water tank shall conform to the requirements of Section 15145.

E. Electrical work for the water tank shall conform to the requirements of Division 16 of these specifications.

3.06 FIELD QUALITY CONTROL

A. Perform field inspection and testing in accordance with Section 01400.

B. If tests indicate Work does not meet specified requirements, remove Work, replace and retest at no cost to Owner.

C. Prior to placing the drinking water storage tank in service, an analysis for volatile organic compounds (VOC's) from water contained therein may be required to verify compliance with drinking water maximum contaminant levels; as per R309-545-11.

END OF SECTION

SECTION 02721

GRAVEL SURFACING AND ROAD BASE

PART 1 GENERAL

1.01 SECTION INCLUDES

A. New gravel road base.

B. New gravel surfacing.

1.02 RELATED SECTIONS

A. Section 02312 - Trenching for Pipe Work.

B. Section 02316 - Fill and Backfill: Compacted fill under base course.

C. Section 02741 - Asphalt Paving: Binder and finish asphalt courses.

1.03 MEASUREMENT AND PAYMENT

A. See Section 02100 - Measurement and Payment.

1.04 REFERENCES

A. AASHTO M 147 - Materials for Aggregate and Soil-Aggregate; American Association of State Highway and Transportation Officials.

B. AASHTO T 180 - Standard Method of Test for Moisture-Density Relations of Soils Using a 10-lb (4.54 kg) Rammer and an 18-in. (457 mm) Drop; American Association of State Highway and Transportation Officials.

C. ASTM C 136 - Standard Test Method for Sieve Analysis of Fine and Coarse Aggregates.

D. ASTM D 698 - Test Method for Laboratory Compaction Characteristics of Soil Using Standard Effort (12,400 ft-lbf/ft3 (600 kN-m/m3)).

E. ASTM D 1556 - Standard Test Method for Density and Unit Weight of Soil in Place by the Sand-Cone Method.

F. ASTM D 2487 - Standard Classification of Soils for Engineering Purposes (Unified Soil Classification System).

G. ASTM D 2922 - Standard Test Methods for Density of Soil and Soil-Aggregate in Place by Nuclear Methods (Shallow Depth).

H. Use the latest edition of the above reference standards as of the date of the project.

1.05 SUBMITTALS

A. See Section 01300 - Administrative Requirements, for submittal procedures.

B. Materials Sources: Submit name of imported materials source.

C. Aggregate Composition Test Reports: Results of laboratory tests on proposed and actual materials used.

D. Compaction Density Test Reports.

1.06 PROJECT CONDITIONS

A. Provide sufficient quantities of gravel material to meet project schedule and requirements. When necessary, store materials on site in advance of need.

B. When aggregate materials need to be stored on site, locate stockpiles where indicated.

1. Separate differing materials with dividers or stockpile separately to prevent intermixing.

2. Prevent contamination.

3. Protect stockpiles from erosion and deterioration of materials.

C. Verify that survey bench marks and intended elevations for the Work are as indicated.

PART 2 PRODUCTS

2.01 MATERIALS

A. Gravel Road Base: Gravel road base, conforming to State Department of Transportation Standard Specifications, Section 02721.

B. Gravel Road Surfacing: Gravel road surfacing, conforming to State Department of Transportation Standard Specifications, Section 02721.

C. Gravel material shall be a Blended Aggregate material: Angular crushed stone; free of shale, clay, friable material and debris.

1. Graded in accordance with ASTM C 136, within the following limits:
   a. 1 inch sieve: 100 percent passing.
   b. 1/2-inch sieve: 79 to 91 percent passing.
   c. No. 4 sieve: 49 to 61 percent passing.
   d. No. 16 sieve: 27 to 35 percent passing.
   e. No. 200 sieve: 7 to 11 percent passing.

D. Portion of aggregate passing through No. 40 sieve shall be non-plastic.

2.02 SOURCE QUALITY CONTROL

A. See Section 01400 - Quality Requirements, for general requirements for testing and analysis of aggregate materials.

B. Where aggregate materials are specified using ASTM D 2487 classification, test and analyze samples for compliance before delivery to site.

C. If tests indicate materials do not meet specified requirements, change material and retest.

D. Provide materials of each type from same source throughout the Work.

PART 3 EXECUTION

3.01 EXAMINATION

A. For new gravel road base and gravel surfacing, verify subgrades have been compacted and accepted by the District Inspector, gradients and elevations are correct, and is dry.

3.02 PREPARATION

A. Correct irregularities in substrate gradient and elevation by scarifying, reshaping, and re-compacting.

B. Do not place aggregate on soft, muddy, or frozen surfaces.

3.03 INSTALLATION

A. New Gravel Road Base

1. Where new gravel road base is to be placed, the sub-base shall be scarified, graded and rolled to provide a compact, smooth base for placement of road base.

2. Place gravel road base material over prepared substrate to provide total compacted thickness as indicated, as described herein and as directed.

B. New Gravel Surfaces.

1. Where new gravel surfaces are to be placed, the sub-base shall be scarified, graded and rolled to provide a compact, smooth base for placement of gravel surfaces.

2. Spread gravel surfacing material over prepared substrate to provide total compacted thickness as indicated, as described herein and to the limits shown on the drawings.

C. Place gravel road base and gravel surfacing material at near optimum moisture.

D. Place aggregate in maximum 4-inch layers and roller compact to 95 percent of maximum dry density.

E. Level and contour surfaces to elevations and gradients indicated.

F. Add water to assist compaction. If excess water is apparent, remove aggregate and aerate to reduce moisture content.

G. Use mechanical tamping equipment in areas inaccessible to compaction equipment.

3.04 TOLERANCES

A. Flatness: Maximum variation of 1/4 inch measured with 10-foot straight edge.

B. Scheduled Compacted Thickness: Within 1/4 inch.

C. Variation from Design Elevation: Within 1/2 inch.

3.05 FIELD QUALITY CONTROL

A. See Section 01400 - Quality Requirements, for general requirements for field inspection and testing.

B. Compaction density testing will be performed on compacted aggregate base course in accordance with ASTM D1556 or ASTM D2922.

C. Results will be evaluated in relation to compaction curve determined by testing uncompacted material in accordance with ASTM D 698 ("Standard Proctor").

D. If tests indicate work does not meet specified requirements, remove work, replace and retest.

E. Frequency of Tests: At least once per day, and as directed by the District Inspector; not to exceed 200 square yards.

3.06 CLEAN-UP

A. Remove unused stockpiled materials, leave area in a clean and neat condition. Grade stockpile area to prevent standing surface water.

END OF SECTION

SECTION 02923

NATIVE SEED PLANTING

PART 1 GENERAL

1.01 SECTION INCLUDES

A. Preparation of subsoil.

B. Fertilizing.

C. Seeding

D. Maintenance.

1.02 RELATED SECTIONS

A. Section 02300 - Grading: Preparation of subsoil and placement of topsoil in preparation for the work of this section.

1.03 MEASUREMENT AND PAYMENT

A. See Section 02100 - Measurement and payment.

1.04 REFERENCES

A. Standards of Official Seed Analysis of North America.

1.05 DEFINITIONS

A. Weeds: Includes Dandelion, Jimsonweed, Quackgrass, Horsetail, Morning Glory, Rush Grass, Mustard, Lambsquarter, Chickweed, Cress, Crabgrass, Canadian Thistle, Nutgrass, Poison Oak, Blackberry, Tansy Ragwort, Johnson Grass, Poison Ivy, Nut Sedge, Nimble Will, Bindweed, Bent Grass, Wild Garlic, and Perennial Sorrel.

1.06 SUBMITTALS

A. See appropriate sections of the Contract Documents for submittal procedures.

B. Certification: Submit certification of grass species and location of seed source.

C. Maintenance Data: Include maintenance instructions, cutting method and maximum height; types, application frequency, and recommended coverage of fertilizer.

1.07 QUALITY ASSURANCE

A. Seed Vendor: Company specializing in seed with minimum five years experience, and certified by the State of Utah.

B. Installer Qualifications: Company approved by the seed vendor.

1.08 REGULATORY REQUIREMENTS

A. Comply with regulatory agencies for fertilizer and herbicide composition.

B. Provide certificate of compliance from authority having jurisdiction indicating approval of fertilizer and herbicide mixture.

1.09 MAINTENANCE SERVICE

A. Furnish service and maintenance of seeded areas for three months from Date of Substantial Completion.

B. Maintain seeded areas immediately after placement until vegetation is well established and exhibits a vigorous growing condition.

PART 2 PRODUCTS

2.01 MATERIALS

A. Native Grass Seed.

1. Mix. Native grass seed shall be fresh, clean, new crop seed; mechanically premixed to the specified proportions. Native grass seed shall be a blend of the following seeds, as supplied by Granite Seed Company of Lehi, Utah:

TYPE	PLANTING RATE (Pounds / Acre)	PERCENTAGE
Western Wheat Grass (Agropyron smithii)	4.0	25.00 %
Slender Wheat Grass (Agropyron trachucaulum)	4.0	25.00 %
Sandberg Bluegrass (Poa sandbergii)	2.0	12.50 %
Mountain brome (Bromus marginatus)	3.0	18.75 %
Bottlebrush squirreltail (Sitanion hystix)	2.0	12.50 %
Needle and thread (Stipa comata)	1.0	6.25 %
Total	16.0	100.00 %

2. Standards. Grass seeds shall comply with “Standards of Official Seed Analysis of North America”; for 85% purity, 80% germination and 1% (maximum) weed seed.

3. Delivery. Seed shall be delivered to the site in original unopened containers, bearing the dealer’s guaranteed analysis and germination percentage and a certificate or stamp or release by a County agriculture commissioner.

B. Fertilizer: Recommended for grass, with fifty percent of the elements derived from organic sources; of proportion necessary to eliminate any deficiencies of topsoil, as indicated by analysis.

C. Water: Clean, fresh and free of substances or matter which could inhibit vigorous growth of grass.

2.02 TESTS

A. Provide analysis of topsoil fill under provisions of Section 01400.

B. Analyze to ascertain percentage of nitrogen, phosphorus, potash, soluble salt content, organic matter content, and pH value.

C. Testing is not required if recent tests are available for imported topsoil. Submit these test results to the testing laboratory for approval. Indicate, by test results, information necessary to determine suitability.

PART 3 EXECUTION

3.01 EXAMINATION

A. Verify that prepared soil base and erosion mats are ready to receive the work of this section.

3.02 PREPARATION

A. Prepare sub-grade in accordance with Section 02316.

B. Place topsoil, where required, in accordance with Section 02316.

C. Place erosion control mat in accordance with Section 02300.

3.03 FERTILIZING

A. Apply fertilizer in accordance with manufacturer's instructions.

B. Apply after smooth raking of topsoil and prior to seeding.

C. Apply fertilizer no more than 48 hours before installing erosion control mat and seeding.

D. Mix thoroughly into upper 2 inches of topsoil.

E. Lightly water to aid the dissipation of fertilizer.

3.04 PLANTING SEED

A. Seeding shall not be performed when the wind velocity exceeds 5 miles per hour, or is determined detrimental to the uniform distribution of seed.

B. Till areas to be planted to a depth of not less than 4-inches prior to seeding

C. Grade planting areas smooth, even surface with a loose, uniformly fine texture. Roll and rake and remove ridges and fill in depressions as required.

D. Moisten prepared seeding area by sprinkling to a depth of six inches before planting; the area shall be surface dry at the time of application. Do not create a muddy soil condition.

E. Seed shall be applied by hydraulic method with a hydro-seeder at the coverage rate recommended by the seed vendor and as accepted by the Engineer. Seed may be applied by broadcast method at the recommended coverage and as accepted by the Engineer.

F. Seed shall be applied at rate of 2 pounds per 1000 square feet.

G. All materials must be available for inspection prior to application.

H. Restore prepared areas to specified condition if eroded or otherwise disturbed after fine grading and prior to planting.

3.05 MAINTENANCE

A. Water to prevent grass and soil from drying out.

B. Control growth of weeds. Apply herbicides in accordance with manufacturer's instructions. Remedy damage resulting from improper use of herbicides.

C. Immediately replace seed to areas which show deterioration or bare spots.

D. Protect seeded areas with warning signs during maintenance period.

END OF SECTION

DIVISION 03

CAST-IN-PLACE CONCRETE

SECTION 03100

CONCRETE FORMWORK

PART 1 GENERAL

1.01 REQUIREMENTS

A. The CONTRACTOR shall furnish all materials for concrete formwork, bracing, shoring, and supports and shall design and construct all falsework, all in accordance with the provisions of the Contract Documents.

1.02 REFERENCE SPECIFICATIONS, CODES, AND STANDARDS

A. Codes: All codes, as referenced herein, are specified in Section 01090, “Reference Standards.”

B. Government Standards: PS 1 Construction and Industrial Plywood

PS 20 American Softwood Lumber Standard

C. Commercial Standards: ACI 117 Standard Tolerances for Concrete Construction and Materials

ACI 347 Guide to Formwork for Concrete

D, The CONTRACTOR shall, in accordance with the requirements in Section 01300, “Contractor Submittals,” submit the following:

1. Form ties and all related accessories, including taper tie plugs, if taper ties are used.

2. Form gaskets.

1.03 QUALITY ASSURANCE

A. Tolerances: Variation from established grades or lines shall not exceed 1/4-inch in 10 feet and there shall be no offsets or visible waviness in the finished surfaces. All other tolerances shall be within the tolerances of ACI 117.

PART 2 PRODUCTS

1.01 GENERAL

A. All lumber brought on the job site for use as forms, shoring, or bracing shall be new material, except as otherwise expressly accepted by the DISTRICT ENGINEER,

B. All forms shall be smooth surface forms and shall be of the following materials:

1. Walls Steel or plywood

2. Columns Steel, plywood, or fiber glass

3. Roof and floor Plywood

4. All other work Steel panels, plywood or tongue and groove lumber

C. Form materials which may remain or leave residues on or in the concrete shall be classified as acceptable for potable water use by the Environmental Protection Agency within 30 days of applications or use.

D. Forms and falsework to support the roof and floor slabs shall be designed for the total dead load, plus a live load of 50 psf (minimum). The minimum design load for combined dead and live loads shall be 100 psf.

2.01 FORM AND FALSEWORK MATERIALS

A. Materials for concrete forms, formwork, and falsework shall conform to the following requirements:

1. Lumber shall be Douglas Fir or Southern Yellow Pine, construction grade or better, in conformance with U.S. Product Standard PS 20.

2. Plywood for concrete formwork shall be new, waterproof, synthetic resin bounded, exterior type Douglas Fir or Southern Yellow Pine plywood manufactured especially for concrete formwork and shall conform to the requirements of PS 1 for Concrete Forms, Class I, and shall be edge sealed.

3. Form materials shall be metal, wood, plywood, or other approved material that will not adversely affect the concrete and will facilitate placement of concrete to the shape, form line, and grade shown.
   a. Metal forms shall be an approved type that will accomplish such results.
   b. Wood forms for surfaces to be painted shall be Medium Density Overlaid plywood, MDO Exterior Grade.

B. Concrete corners.

1. Exterior corners in concrete members shall be provided with 3/4-inch chambers, unless otherwise shown.

2. Re-entrant corners in concrete members shall not have fillets, unless otherwise shown.

2.03 FORM TIES

A. Form ties shall be provided with a plastic cone or other suitable means for forming a conical hole to insure that the form tie may be broken off back of the face of the concrete.

1. The maximum diameter of removable cones for rod ties, or of other removable form tie fasteners having a circular cross section, shall not exceed 1-1/2-inches; and all such fasteners shall be such as to leave holes of regular shape for reaming.

2. Form ties for water retaining structures shall have integral waterstops. Integral waterstops shall tightly fit the form tie so that they cannot be moved from mid point of the tie.

3. Form ties shall be Burke Penta Tie System by The Burke Company; Richmond Snap Tys by the Richmond Screw Anchor Company; or acceptable equal.

B. Removable taper ties may be used when approved by the DISTRICT ENGINEER.

1. A preformed neoprene or polyurethane tapered plug sized to seat at the center of the wall shall be inserted in the hole left by the removal of the taper tie.

2. Use Burke Taper-Tie System by The Burke Company; Taper-Ty by the Richmond Screw Anchor Company; or acceptable equal.

PART 3 EXECUTION

3.01 GENERAL

A. Forms to confine the concrete and shape it to the required lines shall be used wherever necessary.

1 The CONTRACTOR shall assume full responsibility for the adequate design of all forms; and any forms which are unsafe or inadequate in any respect shall promptly be removed from the WORK and replaced at the CONTRACTOR'S expense.

2. Provide worker protection from protruding reinforcement bars in accordance with applicable safety codes.

3. A sufficient number of forms of each kind shall be provided to permit the required rate of progress to be maintained.

4. The design and inspection of concrete forms, falsework, and shoring shall comply with applicable local, state and federal regulations.

5. Plumb and string lines shall be installed before concrete placement and shall be maintained during placement. Such lines shall be in sufficient number and properly installed. During concrete placement, the CONTRACTOR shall continually monitor plumb and string line form positions and immediately correct deficiencies.

B. Concrete forms shall conform to the shape, lines, and dimensions of members as called for on the Drawings, and shall be substantial, free from surface defects, and sufficiently tight to prevent leakage.

1. Forms shall be properly braced or tied together to maintain their position and shape under a load of freshly placed concrete. If adequate foundation for shores cannot be secured, trussed supports shall be provided.

3.02 FORM DESIGN

A. All forms shall be true in every respect to the required shape and size, shall conform to the established alignment and grade, and shall be of sufficient strength and rigidity to maintain their position and shape under the loads and operations incident to placing and vibrating the concrete.

1. Suitable and effective means shall be provided on all forms for holding adjacent edges and ends of panels and sections tightly together and in accurate alignment so as to prevent the formation of ridges, fins, offsets, or similar surface defects in the finished concrete.

2. Plywood, 5/8 inch and greater in thickness, may be fastened directly to studding if the studs are spaced close enough to prevent visible deflection marks in the concrete.

3. The forms shall be tight so as to prevent the loss of water, cement and fines during placing and vibrating of the concrete. Specifically, the bottom of wall forms that rest on concrete footing or slabs shall be provided with a gasket to prevent loss of fines and paste during placement and vibration of concrete. Such gasket may be a 1- to 1-1/2-inch diameter polyethylene rod held in position to the underside of the wall form.

4. Adequate cleanout holes shall be provided at the bottom of each lift of forms. The size, number, and location of such cleanouts shall be as acceptable to the DISTRICT ENGINEER.

5. Whenever concrete cannot be placed from the top of a wall form in a manner that meets the requirements of the Contract Documents, form windows shall be provided in the size and spacing needed to allow placement of concrete to the requirements of Section 03300, Cast-in-Place Concrete. The size, number, and location of such form windows shall be as acceptable to the ENGINEER.

3.03 CONSTRUCTION

A. Vertical Surfaces:

1. All vertical surfaces of concrete members shall be formed, except where placement of the concrete against the ground is shown. Not less than 1-inch of concrete shall be added to the thickness of the concrete member as shown where concrete is permitted to be placed against trimmed ground in lieu of forms. Such permission will be granted only for members of comparatively limited height and where the character of the ground is such that it can be trimmed to the required lines and will stand securely without caving or sloughing until the concrete has been placed.

B. Construction Joints:

1. Concrete construction joints will not be permitted at locations other than those shown or specified, except as may be acceptable to the DISTRICT ENGINEER.

2. When a second lift is placed on hardened concrete, special precautions shall be taken in the way of the number, location, and tightening of ties at the top of the old lift and bottom of the new to prevent any unsatisfactory effect whatsoever on the concrete.

3. Pipe stubs and anchor bolts shall be set in the forms where required.

C. Form Ties:

1. Embedded Ties:
   a. Holes left by the removal of form tie cones shall be reamed with suitable toothed reamers so as to leave the surface of the holes clean and rough before being filled with mortar as specified for “Finish of Concrete Surfaces", in Section 03300, “Cast-In-Place Concrete”.
   b. Wire ties for holding forms will not be permitted.
   c. No form tying device or part thereof, other than metal, shall be left embedded in the concrete.
   d. Ties shall not be removed in such a manner as to leave a hole extending through the interior of the concrete members.
   e. The use of snap ties which cause spalling of the concrete upon form stripping or tie removal will not be permitted.
   f. If steel panel forms are used, rubber grommets shall be provided where the ties pass through the form in order to prevent loss of cement paste.
   g. Where metal rods extending through the concrete are used to support or to strengthen forms, the rods shall remain embedded and shall terminate not less than 1-inch back from the formed face or faces of the concrete.

2. Removable Ties:
   a. Where taper ties are approved for use, the larger end of the taper tie shall be on the wet side of walls in water retraining structures.
   b. After the taper tie is removed, the hole shall be thoroughly cleaned and roughened for bond.
   c. A precast neoprene or polyurethane tapered plug shall be located at the wall centerline.
   d. The hole shall be completely filled with no shrink grout for water bearing and below grade walls. The hole shall be completely filled with no shrink or regular cement gout for above grade walls which are dry on both sides. Exposed faces of walls shall have the outer 2 inches of the exposed face filled with a cement grout which shall match the color and texture of the surrounding wall surface.

3.04 REUSE OF FORMS

A. Form may be reused only if in good condition and only if acceptable to the DISTRICT ENGINEER.

B. Light sanding between uses will be required wherever necessary to obtain uniform surface texture on all exposed concrete surfaces. Exposed concrete surfaces are defined as surfaces which are permanently exposed to view.

C. In the case of forms for the inside wall surfaces of hydraulic/water retaining structures, unused tie rod holes in forms shall be covered with metal caps or shall be filled by other methods acceptable to the ENGINEER.

3.05 REMOVAL OF FORMS

A. Careful procedures for the removal of forms shall be strictly followed, and this work shall be done with care so as to avoid injury to the concrete.

B. No heavy loading on green concrete will be permitted.

C. In the case of roof slabs and above ground floor slabs, forms shall remain in place until test cylinders for the roof concrete attains a minimum compressive strength of 75 percent of the 28-day strength specified in Section 0330, “Cast-in-Place Concrete"; provided, that no forms shall be disturbed or removed under an individual panel or unit before the concrete in the adjacent panel or unit has attained 75 percent of the specified 28-day strength and has been in place for a minimum of 7 days.

1. The time required to establish said strength shall be as determined by the ENGINEER who will make

several test cylinders for this purpose from concrete used in the first group of roof panels placed.

2. If the time so determined is more than the 7-day minimum, then that time shall be used as the minimum length of time.

D. Forms for all vertical walls of waterholding structures shall remain in place at least 36 hours after the concrete has been placed.

E. Forms for all parts of the WORK not specifically mentioned herein shall remain in place for periods of time as recommended in ACI 347.

3.06 MAINTENANCE OF FORMS

A. Forms shall be maintained at all times in good condition, particularly as to size, shape, strength, rigidity, tightness, and smoothness of surface.

B Forms, when in place, shall conform to the established alignment and grades.

C. Before concrete is placed, the forms shall be thoroughly cleaned.

D. The form surfaces shall be treated with a nonstaining mineral oil or other lubricant acceptable to the ENGINEER.

1. Any excess lubricant shall be satisfactorily removed before placing the concrete.

2. Where field oiling of forms is required, the CONTRACTOR shall perform the oiling at least two weeks in advance of their use.

3. Care shall be exercised to keep oil off the surfaces of steel reinforcement and other metal items to be embedded in concrete.

3.07 FALSEWORK

A. The CONTRACTOR shall be responsible for the design, engineering, construction, maintenance, and safety of all falsework, including staging, walkways, forms, ladders, and similar appurtenances, which shall equal or exceed the applicable requirements of the provisions of the OSHA Safety and Health Standards for Construction, and the requirements specified herein.

B. All falsework shall be designed and constructed to provide the necessary rigidity and to support the loads. Falsework for the support of a superstructure shall be designed to support the loads that would be imposed if the entire superstructure was placed at one time.

C. Falsework shall be placed upon a solid footing, safe against undermining, and protected from softening. When the falsework is supported on timber piles, the maximum calculated pile loading shall not exceed 20 tons. When falsework is supported on any portion of the structure which is already constructed, the load imposed by the falsework shall be spread, distributed, and braced in such a way as to avoid any possibility of damage to the structure.

END OF SECTION

SECTION 03151

WATERSTOPS

PART 1 GENERAL

1.01 SECTION INCLUDES

A. Waterstops embedded in concrete and spanning contraction (control), expansion, and construction joints to create a continuous diaphragm to prevent fluid migration.

B. Waterstops for use in concrete joints subjected to chlorinated water and many waterborne chemicals.

C. PVC waterstops in moving joints in concrete.

D. Modified chloroprene rubber hydrophilic waterstops in non-moving joints in concrete.

1.02 REFERENCES

A. ASTM D 412 Standard Test Methods for Vulcanized Rubber and Thermoplastic Rubbers and Thermoplastic Elastomers -- Tension.

B. ASTM D 570 Standard Test Method for Water Absorption of Plastics.

C. ASTM D 624 Standard Test Method for Tear Strength of Conventional Vulcanized Rubber and Thermoplastic Elastomers.

D. ASTM D 638 Standard Test Method for Tensile Properties of Plastics.

E. ASTM D 746 Standard Test Method for Brittleness Temperature of Plastics and Elastomers by Impact.

F. ASTM D 747 Standard Test Method for Apparent Bending Modulus of Plastics by Means of a Cantilever Beam.

G. ASTM D 792 Standard Test Methods for Density and Specific Gravity (Relative Density) of Plastics by Displacement.

H. ASTM D 1149 Standard Test Method for Rubber Deterioration--Surface Ozone Cracking in a Chamber.

I. ASTM D 1203 Standard Test Methods for Volatile Loss from Plastics Using Activated Carbon Methods.

J. ASTM D 2240 Standard Test Method for Rubber Property--Durometer Hardness.

K. COE CRD-C 572 Corps of Engineers Specifications for Polyvinylchloride Waterstop; Corps of Engineers.

L. Use the latest edition of the above reference standards as of the date of the project.

1.03 QUALITY ASSURANCE

A. Manufacturer Qualifications: Waterstop manufacturer shall demonstrate not less than five years of continuous, successful experience in the production of waterstops.

1.04 DELIVERY, STORAGE, AND HANDLING

A. Store waterstop under tarps to protect from oil and dirt; protect hydrophilic waterstops from moisture to prevent premature expansion.

PART 2 PRODUCTS

2.01 MANUFACTURER

A. Provide products manufactured by Greenstreak, Inc., St. Louis, MO, 63122-6614. Phone: (314) 225-9400 or 1-800 325-9504. email: www.greenstreak.com.

B. Substitutions: See Section 01600 - Product Requirements.

2.02 WATERSTOP MATERIALS

A. PVC Waterstops: Extruded elastomeric plastic compound with polyvinyl chloride (PVC) as basic resin and manufactured from virgin materials; no reclaimed PVC or pigments.

1. Provide hog rings or grommets spaced 12 inches on center for the full length of waterstop flanges.

2. Properties:
   a. Water absorption in accordance with ASTM D 570: 5 percent, maximum.
   b. Tear Strength in accordance with ASTM D 624: 285 lb/in, minimum.
   c. Percent Elongation in accordance with ASTM D 638: 360 percent, maximum.
   d. Tensile Strength in accordance with ASTM D 638: 2000 psi, minimum.
   e. Brittleness Temperature, in accordance with ASTM D 746: No failure at-35 degrees F.
   f. Stiffness in Flexure in accordance with ASTM D 747: 600 psi, minimum.
   g. Specific Gravity in accordance with ASTM D 792: 1.4, maximum.
   h. Ozone Resistance in accordance with ASTM D 1149: No Failure.
   i. Volatile Loss in accordance with ASTM D 1203: 0.50 percent, maximum.
   j. Hardness, Shore A, in accordance with ASTM D 2240: 65 to 80.
   k. Tensile Strength after accelerated extraction in accordance with CRD-C 572: 1600 psi, minimum.
   l. Elongation after accelerated extraction in accordance with CRD-C 572: 300 percent, minimum.
   m. Effect on Alkali after 7 days in accordance with CRD-C 572:
      1) Weight Change: Plus, 0.25 percent, maximum, minus 0.0 percent, maximum.
      2) Hardness Change: 5 plus/minus, maximum.

B. Hydrophilic Waterstops: HYDROTITE dual extrusion type of chloroprene rubber and modified chloroprene rubber with hydrophilic properties; with delay coating to inhibit initial expansion due to moisture present in fresh concrete.

1. Shape: as indicated on the drawings.

2. Size: as indicated on the drawings.

3. Properties of chloroprene rubber:
   a. Tensile strength in accordance with ASTM D 412: 1275 psi, minimum.
   b. Ultimate elongation in accordance with ASTM D 412: 350 percent, minimum.
   c. Hardness, Shore A, in accordance with ASTM D 2240: 55, plus/minus 5.

4. Properties of hydrophilic chloroprene rubber:
   a. Tensile strength in accordance with ASTM D 412: 300 psi, minimum.
   b. Ultimate elongation in accordance with ASTM D 412: 600 percent, minimum.
   c. Hardness, Shore A, in accordance with ASTM D 2240: 55, plus/minus 5.
   d. Expansion ratio: Minimum 3 to 1 volumetric change in distilled water at 70 degrees F.

C. PVC Waterstop Accessories: Provide factory-made pieces for changes of direction, intersections, and transitions; no splices other than straight butt joints allowed in field.

D. Hydrophilic Waterstop Accessories:

1. Adhesive for smooth concrete surfaces: Greenstreak Rubber Adhesive.

2. Adhesive for rough wet or dry concrete surfaces: Greenstreak 7300 two-component epoxy gel.

3. Adhesive for rough dry concrete surfaces: Greenstreak LEAKMASTER single component hydrophilic sealant.

4. Adhesive for jointing waterstop: Cyanacrylate (super glue).

5. Sealant for waterstop joints and open cells: Greenstreak LEAKMASTER.

6. Adhesive for joining hydrophilic and PVC waterstops: Greenstreak LEAKMASTER.

PART 3 EXECUTION

3.01 INSTALLATION

A. Maintain continuity of waterstops at all intersections and transitions. Make joints as specified; do not lap pieces of waterstop.

B. Follow waterstop manufacturer's instructions.

C. Center waterstops in joints and secure, prior to placing concrete.

D. PVC Waterstops:

1. All splices: Heat-welded straight butt joint splices made in accordance with requirements for shop fabricated fittings. Do not use adhesives or solvents.

2. Do not field-splice corners and changes of direction; use factory-fabricated corners and transitions.

3. Use teflon covered thermostatically controlled waterstop splicing iron at approximately 380 degrees F.

4. Secure to reinforcing steel or formwork using wire at not greater than 12 inches on center.

E. Hydrophilic Waterstops:

1. Cut coil ends square with shears or sharp blade to make tight joints at splices without overlaps; miter corners.

2. Join splices with adhesive and seal with sealant.

3. Seal exposed cells with sealant.

END OF SECTION

SECTION 03200

REINFORCEMENT STEEL

PART 1 GENERAL

1.01 REQUIREMENTS

A. The CONTRACTOR shall furnish, fabricate, and place all concrete reinforcement steel, welded wire fabric, couplers, and concrete inserts for use in reinforced concrete construction; and shall perform all appurtenant work, including all the wires, clips, supports, chairs, spacers, and other accessories, all in accordance with the Contract Documents.

1.02 REFERENCE SPECIFICATIONS, CODES AND STANDARDS

A. Codes: All codes, as referenced herein, are specified in Section 01090, “Reference Standards”.

B. Commercial Standards.

1.	ACI 315	Details and Detailing of Concrete Reinforcement
2.	ACI 318	Building Code Requirements for Reinforced Concrete
3.	CRSI MSP-1	Concrete Reinforcing Steel Institute Manual of Standard Practice
4.	WRI	Manual of Standard Practice for Welded Wire Fabric
5.	AWS DI.4	Structural Welding Code – Reinforcing Steel
6.	ASTM A 82	Specification for Steel Wire, Plain, for Concrete Reinforcement
7.	ASTM A 185	Specification for Welded Steel Wire Fabric, Plain, for Concrete Reinforcement
8.	ASTM A 615	Specification for Deformed and Plain billet-Steel Bars for Concrete Reinforcement
9.	ASTM A 775	Specification for Epoxy-coated Reinforcing Steel Bars

1.03 CONTRACTOR SUBMITTALS

A. The CONTRACTOR shall furnish shop bending diagrams, placing lists, and drawings of all reinforcement steel prior to fabrication in accordance with the requirements of Section 01300 - Contractor Submittals.

B. Details of the concrete reinforcement steel and concrete inserts shall be submitted by the CONTRACTOR at the earliest possible date after receipt by the CONTRACTOR of the Notice to Proceed.

1. Said details of reinforcement steel for fabrication and erection shall conform to ACI 315 and the requirements specified and shown.

2. The shop bending diagrams shall show the actual lengths of bards, to the nearest inch measured to the intersection of the extensions (tangents for bars of circular cross section) of the outside surface.

3. The shop drawing shall include bar placement diagrams which clearly indicate the dimensions of each bar splice.

4. Where mechanical couplers are required or permitted to be used to splice reinforcement steel, the CONTRACTOR shall submit manufacturer’s literature which contains written instructions and recommendations for installation capacity of each type used, and certified test reports which verify the load capacity of each type and size of coupler used, and shop drawings which show the location of each coupler with details of how they are to be installed in the formwork.

C. If reinforcement stall is spliced by welding at any location, the CONTRACTOR shall submit mill test reports which shall contain the information necessary for the determination of the carbon equivalent as specified in AWS D1.4.

1. The CONTRACTOR shall submit a written welding procedure for each type of weld for each size of bar which is to be spliced by welding; merely a statement that the AWS procedures will be followed is not acceptable.

1.04 QUALITY ASSURANCE

A. If requested by the DISTRICT ENGINEER, the CONTRACTOR shall provide samples from each heat of reinforcement steel delivered in a quantity adequate for testing. Costs of initial test will be paid by the OWNER. Costs of additional tests due to material failing initial tests shall be paid by the CONTRACTOR.

B. If reinforcement steel is spliced by welding at any location, the CONTRACTOR shall submit certifications of procedure qualifications for each welding procedure used and certification of welder qualifications, for each welding procedure and for each welder performing the work. Such qualifications shall be as specified in AWS D1.4.

C. If requested by the DISTRICT ENGINEER, the CONTRACTOR shall provide samples of each type of welded splice used in the work in a quantity and of dimensions adequate for testing. At the discretion of the DISTRICT ENGINEER, radiographic testing of direct butt-welded splices will be performed. The CONTRACTOR shall provide assistance necessary to facilitate testing. The CONTRACTOR shall repair any weld which fails to meet the requirements of AWS D1.4. The costs of testing will be paid by the OWNER; except, the costs of all tests which fail to meet specified requirements shall be paid by the CONTRACTOR.

PART 2 PRODUCTS

2.01 MATERIAL REQUIREMENTS

A. Materials specified in this Section which may remain or leave residues on or with in the concrete shall be classified as acceptable for potable water use by the Environmental Protection Agency within 30 days of application or use.

2.02 REINFORCEMENT STEEL

A. Reinforcement Steel for all cast-in-place reinforced concrete construction shall conform to the following requirements:

1. Bar reinforcement shall conform to the requirements of ASTM A 615 for Grade 60 Billet Steel Reinforcement or as otherwise shown.

2. Welded wire fabric reinforcement shall conform to the requirements of ASTM A 185 and the details shown; provided, that welded wire fabric with longitudinal wire of W4 size wire and smaller shall be either furnished in flat sheets or in rolls with a core diameter of not less than 10 inches; and provided further, that welded wire fabric with longitudinal wires longer than W4 size shall be furnished in flat sheets only.

3. Spiral reinforcement shall be cold-drawn steel wire conforming to the requirements of ASTM A 82.

B. Accessories

1. Accessories shall include all necessary chairs, slab bolsters, concrete blocks, tie wires, dips, supports, spacers, and other devices to position reinforcement during concrete placement.
   a. All bar supports shall meet the requirements of the CRSI Manual of Standard Practice including special requirements for supporting epoxy coated reinforcing bars.
   b. Wire bard supports shall be CRSI Class 1 for maximum protection with a 1/89-inch minimum thickness of plastic coating which extends at least 1/2-inch from the concrete surface. Plastic shall be gray in color.

2. Concrete blocks (dobies), used to support and position reinforcement steel, shall have the same or higher compressive strength as specified for the concrete in which it is located. Wire ties shall be embedded in concrete block bar supports.

C. Epoxy coating for reinforcing and accessories, where specified or shown, shall conform to ASTM A 775.

2.03 MECHANICAL COUPLERS

A. Mechanical couplers shall be provided where shown and where approved by the DISTRICT ENGINEER. The couplers shall develop a tensile strength which exceed 125 percent of the yield strength of the reinforcement
bars being spliced at each splice.

B. Where the type of coupler used is composed of more than one component, all components required for a complete splice shall be supplied. This shall apply to all mechanical splices, including those splices intended for future connections.

C. The reinforcement steel and coupler used shall be compatible for obtaining the required strength of the connection. Straight threaded type couplers shall require that use of the next larger size reinforcing bar or shall be used with reinforcing bars with specially forged ends which provide upset threads which do not decrease the basic cross section of the bar.

D. Couplers shall be Lenton Form Saver as manufactured by Erico Products; Dowel Bar Splicer System as manufactured by Richmond Screw Anchor Company; or acceptable equal.

2.04 WELDED SPLICES

A. Welded splices shall be provided where shown and where approved by the DISTRICT ENGINEER. All welded splices of reinforcement steel shall develop a tensile strength which exceeds 125 percent of the yield strength of the reinforcement bars which are connected.

B. All materials required to conform the welded splices to the requirements of AWS D1.4 shall be provided.

2.05 EPOXY GROUT

A. Epoxy for grouting reinforcing bars shall be specifically formulated for such applications, for the moisture condition, application temperature, and orientation of the hole to be filled. Epoxy grout shall meet the requirements found in Section 03315 - Grout.

PART 3 EXECUTION

3.01 GENERAL

A. All reinforcement steel, welded wire fabric, couplers, and other appurtenances shall be fabricated, and placed in accordance with the requirements of the International Building Code and the supplementary requirements specified herein.

3.02 FABRICATION

A. General

1. Reinforcement steel shall be accurately formed to the dimensions and shapes shown, and fabricating details shall be prepared in accordance with ACI 315 and ACI 318, except as modified by the Drawings.
   a. Stirrups and tie bars shall be bent around a pin having a diameter not less than 1-1/2 inch for No. 3 bars, 2-inch for No. 4 bars, and 2-1/2 inch for No. 5 bars.
   b. Bends for other bars shall be made around a pin having a diameter not less than 6 times the bar diameter, except for bars larger than 1 inch, in which case the bends shall be made around a pin of 8 bar diameters.
   c. Bars shall be bent cold.

2. The CONTRACTOR shall fabricate reinforcement bars for structures in accordance with bending diagrams, placing lists, and placing drawings. Said drawings, diagrams, and lists shall be prepared by the CONTRACTOR as specified under Section 01300 - Contractor Submittals.

B. Fabricating Tolerances: Bars used for concrete reinforcement shall meet the following requirements for fabricating tolerances:

1. Sheared length; +/- 1 inch.

2. Depth of truss bars: + 0, - 1/2-inch.

3. Stirrups, ties, and spirals: +/- 1/2-inch.

4. All other bends: +/- 1 inch.

3.03 PLACING

A. Reinforcement steel shall be accurately positioned as shown, and shall be supported and wired together to prevent displacement, using annealed iron wire ties or suitable clips at intersections.

1. All reinforcement steel shall be supported by concrete, plastic or metal supports, spacers or metals hangers which are strong and rigid enough to prevent any displacement of the reinforcement steel.

2. Where concrete is to be placed on the ground, supporting concrete blocks (or dobies) shall be used, in sufficient numbers to support the bars without settlement, but in no case shall such support be continuous. All concrete blocks used to support reinforcement steel shall be tied to the steel with wire ties which are embedded in the blocks.

3. For concrete over formwork, the CONTRACTOR shall furnish concrete, metal, plastic, or other acceptable bar chairs and spacers.

B. Limitations on the use of bar support materials shall be as follows.

1. Concrete Dobies: permitted at all locations except where architectural finish is required.

2. Wire Bar Supports: permitted only at slabs over dry areas, interior dry wall surfaces, and exterior wall surfaces.

3. Plastic Bar: permitted at all locations except on grade.

C. Tie wires shall be bent away from the forms in order to provide the specified concrete coverage.

D. Bars additional to those shown which may be found necessary or desirable by the CONTRACTOR for the purpose of securing reinforcement in position shall be provided by the CONTRACTOR at its own expense.

E. Unless otherwise specified, reinforcement placing tolerances shall be within the limits specified in Section 7.5 of ACI 318, except where in conflict with the requirements of the International Building Code.

F. Bars may be moved as necessary to avoid interference with other reinforcement steel, conduits, or embedded items. If bars are moved more than one bar diameter, or enough to exceed the above tolerances, the resulting arrangement of bars shall be as acceptable to the DISTRICT ENGINEER.

G. Welded wire fabric reinforcement placed over horizontal forms shall be supported on slab bolsters. Slab bolsters shall be spaced not more than 30 inches on centers, shall extend continuously across the entire width of the reinforcement mat, and shall support the reinforcement mat in the plane shown.

H. Welded wire fabric placed over the ground shall be supported on wired concrete blocks (dobies) spaced not more than 3 feet on centers in any direction. The construction practice of placing welded wire fabric on the ground and hooking into place in the freshly placed concrete shall not be used.

I. Epoxy coated reinforcing bars shall be stored, transported, and placed in such a manner as to avoid chipping of the epoxy coating. Non-abrasive slings made of nylon and similar materials shall be used. Specially coated bar supports shall be used. All chips or cracks in the epoxy coating shall be repaired with a compatible epoxy repair material prior to placing concrete.

J. Accessories supporting reinforcing bars shall be spaced such that there is no deflection of the accessory from the weight of the supported bars. When used to space the reinforcing bars from wall forms, the forms and bars shall be located so that there is no deflection of the accessory when the forms are tightened into position.

3.04 SPACING OF BARS

A. The clear distance between parallel bars (except in columns and between multiple layers of bars in beams) shall be not less than the nominal diameter of the bars nor less than 1-1/3 times the maximum size of the coarse aggregate, nor less than one inch.

B. Where reinforcement in beams or girders is placed in 2 or more layers, the clear distance between layers shall be not less than one inch.

C. In columns, the clear distance between longitudinal bars shall be not less than 1-1/2 times the bar diameter, nor less than 1-1/2 times the maximum size of the coarse aggregate, nor less than 1-1/2 inches.

D. The clear distance between bars shall also apply to the distance between a contact splice and adjacent splices or bars.

3.05 SPLICING

A. General

1. Reinforcement bar splices shall only be used at locations shown. When it is necessary to splice reinforcement at points other than where shown, the character of the splice shall be as acceptable to the DISTRICT ENGINEER.

2. Unless otherwise indicated, dowels shall match the size and spacing of the spliced bar.

B. Splices of Reinforcement

1. The length of lap for reinforcement bars, unless otherwise shown shall be in accordance with ACI 318-89, Section 12.15.1 for a Class B splice.

2. Laps of welded wire fabric shall be in accordance with the ACI 318. Adjoining sheets shall be securely tied together with No. 14 tie wire, one tie for each 2 running feet. Wires shall be staggered and tied in such a manner that they cannot slip.

3. Splices in column spiral reinforcement, when necessary, shall be made by welding or by a lap of1-1/2 turns.

C. Bending or Straightening

1. Reinforcement shall not be straightened or rebent in a manner which will injure the material. Bars with kinks or bends not shown shall not be used. All bars shall be bent cold, unless otherwise permitted by the DISTRICT ENGINEER. No bars partially embedded in concrete shall be field-bent except as shown or specifically permitted by the DISTRICT ENGINEER.

D. Couplers which are located at a joint face shall be a type which can be set either flush or recessed from the face as shown. The couplers shall be sealed during concrete placement to completely eliminate concrete or cement paste from entering. Couplers intended for future connections shall be recessed a minimum of 1/2-inch from the concrete surface. After the concrete is placed, the coupler shall be plugged with plastic plugs which have an O-ring seal and the recess filled with sealant to prevent any contact with water or other

corrosive materials. Threaded couplers shall be plugged.

E. Unless noted otherwise, mechanical coupler spacing and capacity shall match the spacing and capacity of the reinforcing shown for the adjacent section.

3.06 CLEANING AND PROTECTION

A. Reinforcement steel shall be protected, at all times, from conditions conducive to corrosion until concrete is placed around it.

B. The surfaces of all reinforcement steel and other metalwork to be in contact with concrete shall be thoroughly cleaned of all dirt, grease, loose scale and rust, grout, mortar and other foreign substances immediately before the concrete is placed. Where there is delay in depositing concrete, reinforcement shall be re-inspected and, if necessary re-cleaned.

3.07 EMBEDMENT OF DRILLED REINFORCING STEEL DOWELS

A. Hole Preparation

1. The hole diameter shall be as recommended by the epoxy manufacturer but shall be no larger than 0.25 inch greater than the diameter of the outer surface of the reinforcing bar deformations.

2. The depth of the hole shall be as recommended by the epoxy manufacturer to fully develop the bar; but shall not be less than 12 bar diameters, unless noted otherwise.

3. The hole shall be drilled by methods which do not interfere with the proper bonding of epoxy.

4. Existing reinforcing steel in the vicinity of proposed holes shall be located prior to drilling. The location of holes to be drilled shall be adjusted to avoid drilling through or nicking any existing reinforcing bars.

5. The hole shall be blown clean with clean, dry compressed air to remove all dust and loose particles.

6. Epoxy shall be injected into the hole through a tube placed to the bottom of the hole. The tube shall be withdrawn as epoxy is placed but kept immersed to prevent formation of air pockets. The hole shall be filled to a depth that ensures that excess material will be expelled from the hole during dowel placement.

7. Dowels shall be twisted during insertion into the partially filled hole so as to guarantee full wetting of the bar surface with epoxy. The bar shall be inserted slowly enough to avoid developing air pockets.

END OF SECTION

SECTION 03290

JOINTS IN CONCRETE

PART 1 GENERAL

1.01 REQUIREMENTS

A. The CONTRACTOR shall construct all joints in concrete at the locations indicated on the drawings. Joints required in concrete structures are of various types and will be permitted only where shown, unless specifically accepted by the DISTRICT ENGINEER.

1.02 REFERENCE SPECIFICATIONS, CODES AND STANDARDS

A. Federal Specifications:

1. TT-S-0227E (3) Sealing Compound, elastomeric type, Multi-component for Caulking, Sealing, and Glazing Buildings and Other Structures.

B. U.S. Army Corps of Engineers Specifications:

1. CRD-C572PVC Waterstop.

C. Commercial Standards:

1. ASTM A 775 Specification for Epoxy-Coated Reinforcing Steel Bars
2. ASTM C 920 Specification for Elastomeric Joint Sealants
3. ASTM D 412 Test Methods for Rubber Properties in Tension
4. ASTM D 624 Test Method for Rubber Property – Tear Resistance
5. ASTM D 638 Test Method for Tensile Properties of Plastics
6. ASTM D 746 Test Methods for Brittleness Temperature of Plastics and Elastomers by Impact
7. ASTM D 747 Test Method for Apparent Bending Modulus of Plastics by Means of a Cantilever Beam
8. ASTM D 1056 Specifications for Flexible Cellular Materials – Sponge or Expanded Rubber
9. ASTM D 1752 Specifications for Preformed Sponge Rubber and Cork Expansion Joint Fillers for Concrete Paving and Structural Construction
10. ASTM D 2240 Test Method for Rubber Property – Durometer Hardness
11. ASTM D 2241 Specification for Poly (Vinyl Chloride) (PVC) Pressure-Rated Pipe (SDR-Series)
12. Use the latest edition of the above reference standards as of the date of the project.

1.03 TYPES OF JOINTS

A. Construction Joints: When fresh concrete is placed against a hardened concrete surface, the joint between the two pours are called a construction joint.

1. Unless otherwise specified, all joints in water bearing members shall be provided with a waterstop and/or sealant groove of the shape specified and shown.

2. The surface of the first pour may also be required to receive a coating of bond breaker as shown.

B. Contraction Joints: Contraction joints are similar to construction joints except that the fresh concrete shall not bond to the hardened surface of the first pour, which shall be coated with a bond breaker.

1. The slab reinforcement shall be stopped 4-1/2 inches from the joint; which is provided with a sleeve-type dowel, to allow shrinkage of the concrete of the second pour.

2. Waterstop and/or sealant groove shall also be provided when specified or shown.

C. Expansion Joints: To allow the concrete to expand freely, a space is provided between the two pours; the joint shall be formed as indicated.

1. This space is obtained by placing a filler joint material against the first pour, which acts as a form for the second pour.

2. Unless otherwise specified, all expansion joints in water bearing members shall be provided with a center-bulb type waterstop as shown.

3. Premolded expansion joint material shall be installed with the edge at the indicated distance below or back from finished concrete surface; and shall have a slightly tapered, dressed, and oiled wood strip secured to or placed at the edge thereof during concrete placement, which shall later be removed to form space for sealing material.

4. The space so formed shall be filled with a joint sealant material as specified in the Paragraph in Part 2 entitled “Joint Sealant”. In order to keep the two wall or slab elements in line, the joint shall also be provided with a sleeve-type dowel as shown.

D. Control Joints: The function of the control joint is to provide a weaker plane in the concrete, where shrinkage cracks will probably occur.

1. A groove, of the shape and dimensions shown, shall be formed or saw-cut in the concrete.

2. The groove shall be filled afterward with a joint sealant material as specified in the Paragraph in Part 2 entitled “Joint Sealant”.

1.04 CONTRACTOR SUBMITTALS

A. Waterstops: Prior to production of the material required under this contract, qualification samples shall be submitted. Such samples shall consist of extruded or molded sections of each size or shape to be used, and shall be accomplished so that the material and workmanship represents, in all respects, the material to be furnished under this contract. The balance of the material to be used under this contract shall not be produced until after the DISTRICT ENGINEER has reviewed the qualification samples.

B. Joint Sealant: Prior to ordering the sealant material, the CONTRACTOR shall submit to the DISTRICT ENGINEER for the DISTRICT ENGINEER’s review, sufficient data to show general compliance with the requirements of the Contract Documents.

C. Certified test reports from the sealant manufacturer on the actual batch of material being supplied indicating compliance with the above requirements shall be furnished the CIYT ENGINEER before the sealant is used on the job.

D. Shipping Certification: The CONTRACTOR shall provide written certification from the manufacturer as an integral part of the shipping form, to show that all of the material shipped to this project meets or exceeds the physical property requirements of the Contract Documents. Supplier certificates are not acceptable.

E. Joint Location: The CONTRACTOR shall submit placement shop drawings showing the location and type of all joints for each structure.

1.05 QUALITY ASSURANCE

A. Waterstop Inspection: It is required that all waterstop field joints shall be subject to rigid inspection, and no such work shall be scheduled or started without having made prior arrangements with the DISTRICT ENGINEER to provide for the required inspections. Not less than 24 hours' notice shall be provided to the DISTRICT ENGINEER for scheduling such inspections.

B. All field joints in waterstops shall be subject to rigid inspection for misalignment, bubbles, inadequate bond, porosity, cracks, offsets, and other defects which would reduce the potential resistance of the material to water pressure at any point. All defective joints shall be replaced with material which shall pass said inspection, and all faulty material shall be removed from the site and disposed of by the CONTRACTOR at its own expense.

C. The following waterstop defects represent a partial list of defects which shall be grounds for rejection:

1. Offsets at joints greater than 1/16-inch or 15 percent of material thickness, at any point, whichever is less.

2. Exterior crack at joint, due to incomplete bond, which is deeper than 1/16-inch or 15 percent of material thickness, at any point, whichever is less.

3. Any combination of offset or exterior crack which will result in a net reduction in the cross section of the waterstop in excess of 1/16-inch or 15 percent of material thickness at any point, whichever is less.

4. Misalignment of joint which result in misalignment of the waterstop in excess of 1/2-inch in 10 feet.

5. Porosity in the welded joint as evidenced by visual inspection.

6. Bubbles or inadequate bonding which can be detected with a penknife test. (If, while prodding the entire joint with the point of a penknife, the knife breaks through the outer portion of the weld into a bubble, the joint shall be considered defective.)

D. Waterstop samples: Prior to use of the waterstop material in the field, a sample of a fabricated mitered cross and a tee constructed of each size or shape of material to be used shall be submitted to the DI ENGINEER for review.

1. These samples shall be fabricated so that the material and workmanship represent in all respects the fittings to be furnished under this contract.

2. Field samples of fabricated fittings (crosses, tees, etc.) will be selected at random by the DISTRICT ENGINEER for testing by a laboratory at the OWNER's expense. When tested, they shall have a tensile strength across the joints equal to at least 600 psi.

E. Construction Joint Sealant: The CONTRACTOR shall prepare adhesion and cohesion test specimens as specified herein, at intervals of 5 working days while sealants are being installed.

F. The sealant material shall show no signs of adhesive or cohesive failure when tested in accordance with the following procedure in laboratory and field tests:

1. Sealant specimen shall be prepared between 2 concrete blocks (1-inch by 2-inch by 3-inch). Spacing between the blocks shall be 1-inch. Coated spacers (2-inch by 1-1/2-inch by 1/2-inch) shall be used to insure sealant cross-sections of 1/2-inch by 2 inches with a width of 1-inch.

2. Sealant shall be cast and cured according to manufacturer's recommendations, except that curing period shall be not less than 24 hours.

3. Following curing period, the gap between blocks shall be widened to 1-1/2-inch. Spacers shall be used to maintain this gap for 24 hours prior to inspection for failure.

1.06 GUARANTEE

A. The CONTRACTOR shall provide a 5-year written guarantee of the entire sealant installation against faulty and/or incompatible materials and workmanship, together with a statement that it agrees to repair or replace, to the satisfaction of the OWNER, at no additional cost to the OWNER, any such defective areas which become evident within said 5-year guarantee period.

PART 2 PRODUCTS

2.01 GENERAL

A. All Joint materials specified herein shall be classified as acceptable for potable water use, by the Environmental Protection Agency, within 30 days of application.

2.02 PVC WATERSTOPS

A. General: Waterstops shall be extruded from an elastomeric polyvinyl chloride compound containing the plasticizers, resins, stabilizers, and other materials necessary to meet the requirements of these Specifications. No reclaimed or scrap material shall be used. The CONTRACTOR shall obtain from the waterstop manufacturer and shall furnish to the DISTRICT ENGINEER for review, current test reports and a written certification of the manufacturer that the material to be shipped to the job meets the physical requirements as outlined in the U. S. Army Corps of Engineers Specification CRD-C572 and those listed herein.

B. Flatstrip and Center Bulb Waterstops: Flatstrip and center bulb waterstops shall be as detailed and as manufactured by Greenstreak Plastic Products Co., St. Louis, Missouri or acceptable equal; provided, that at no place shall the thickness of flat strip waterstops, including the center bulb type, be less than 3/8 inch.

C. Multi Rib Waterstops: Multi rib waterstops, where required, shall be as detailed and as manufactured by Greenstreak Plastic Products Co., St. Louis, Missouri or acceptable equal. Prefabricated joint fittings shall be used at all intersections of the ribbed type waterstops.

D. Other types of Waterstops: When other types of waterstops, not listed above, are required and shown, they shall be subjected to the same requirements as those listed herein.

E. Waterstop Testing Requirements: When tested in accordance with the specified test standards, the waterstop material shall meet or exceed the following requirements:

1. Physical Property, Sheet Material	Value	ASTM Standard
Tensile Strength-min (psi)	1750	D 638, Type IV
Ultimate Elongation-min (percent)	350	D 638, Type IV
Low Temp Brittleness-max (degrees F)	-35	D 746
Stiffness in Flexure-min (psi)	400	D 747

2. **Accelerated Extraction (CRD-C572)**

Tensile Strength-min (psi)	1500	D 638, Type IV
Ultimate Elongation-min (percent)	300	D 638, Type IV

3. **Effect of Alkalies (CRD-C572)**

Change in Weight (percent)	+0.25/-0.10	-------
Change in Durometer, Shore A	+5	D 2240

4. **Finish Waterstop**

Tensile Strength-min (psi)	1400	D 638, Type IV

Ultimate Elongation-min (percent)	280	D 638, Type IV

2.03 JOINT SEALANT

A. Joint sealant shall be polyurethane polymer designed for bonding to concrete which is continuously submerged in water. No material will be acceptable which has an unsatisfactory history as to bond or durability when used in the joints of water retaining structures.

B. Joint sealant material shall meet the following requirements. (73 degrees F and 50 percent R. H.):

1.	Work Life	45 – 180 minutes
2.	Time to Reach 20 Shore “A” Hardness (At 77 degrees F, 200 gr quantity)	24 hours, maximum
3.	Ultimate Hardness (ASTM D2240	20-45 Shore “A”
4.	Tensile Strength (ASTM D 412)	200 psi, minimum
5.	Ultimate Elongation (ASTM D 412)	400 percent, minimum
6.	Tear Resistance (Die C ASTM D 624)	75 pounds per inch of thickness, minimum
7.	Color	Light Gray

C. All polyurethane sealants for waterstop joints in concrete shall conform to the following requirements:

1. Sealant shall be 2-part polyurethane with the physical properties of the cured sealant conforming to or exceeding the requirements of ANSI/ASTM C 920 or Federal Specification TT-S-0227 E (3) for 2 part material, as applicable.

2. For vertical joints and overhead horizontal joints, only “non-sag” compounds shall be used; all such compounds shall conform to the requirements of ANSI/ASTM C920 Class 25, Grade NS, or Federal Specification TT-S-0227 E (3), Type II, Class A.

3. For plane horizontal joints, the self-leveling compounds which meet the requirements of ANSI/ASTM C 920 Class 25, Grade P, or Federal Specification TT-S-0227 E93, Type I shall be used. For joints subject to either pedestrian or vehicular traffic, a compound providing non-tracking characteristics, and having a Shore “A” hardness range of 35 to 45, shall be used.

4. Primer materials, if recommended by the sealant manufacturer, shall conform to the printed instructions and recommendations of the sealant manufacturer.

D. All sealants, wherever shown or required hereunder, shall be PSI-270 as manufactured by Polymeric Systems Inc.; Elastothane 227R as manufactured by Pacific Polymers; Sikaflex 2C, as manufactured by Sika Corporation; or acceptable equal.

2.04 JOINT MATERIALS

A. Neoprene Bearing Pad: Neoprene bearing pads shall be of the dimensions and hardness shown on the drawings, and shall be manufactured by an acceptable manufacturer. Bearing pad shall be neoprene conforming to ASTM D 2000 BC 420, 40 durometer hardness, unless otherwise noted.

B. Closed Cell Neoprene Pad: Closed cell neoprene pads shall be used as a filler material in the flexible joint between the wall and roof connection in the areas not taken up by the solid neoprene bearing pads.

1. Closed cell neoprene shall be ordered at least 1/4-inch wider than theoretically required to facilitate placing and to reduce development of voids between filler pads and bearing pads.

2. The material shall be medium grade closed cell neoprene conforming to 2A3 of ASTM D-1056-85 and as further specified in the table below and on the drawings. (NOTE: Rubatex 431N or R423N, or approved equal, are acceptable materials).

CLOSED CELL NEOPRENE PAD SPECIFICATIONS Temperature Range:	
Low (Flex Without cracking)	-30° F
High continuous	150° F
High Intermittent	200° F
Heat Aging (7 days @ 158° F) Lineal Shrinkage, max	5%
Tensile Strength	115 PSI (min)
Elongation	180% (min)
Resilience (Bayshore-% Rebound Average ½ inch Thickness @ 72° F	20 % - 40%

C All voids around bearing pads and cavities between bearing and filler pads, whether these voids and cavities are large or small, shall be filled with soft mastic.

1. The mastic material shall be installed at a consistency that will not adversely affect the quality of PVC and neoprene materials.

2. The CONTRACTOR'S workmanship shall be such that no cement grout or concrete seepage will occur through the bearing and fills pad areas.

3. Acceptable materials are SIKAFLEX 1A as manufactured by Sika Corporation or Select Seal U-230, as Manufactured by Select Products Company, or acceptable equals.

D. Bearing and filler pads shall be installed as shown on the drawings.

1. They shall be glued to the concrete with an acceptable rubber cement to prevent uplift of the pads during concrete placement.

2. In addition, all pads shall be held down with approved plastic shim plates placed under the reinforcing steel.

3. Nailing pads in place will not be permitted.

E. Joint Filler:

1. Joint filler for expansion joints in water holding structures shall be neoprene conforming to ASTM D1056.

2. Joint filler material in other locations shall be of the preformed non-extruding type joint filler constructed of cellular neoprene sponge rubber or polyurethane of form texture.

3. Bituminous fiber type will not be permitted.

4. All non-extruding and resilient-type preformed expansion joint fillers shall conform to the requirements and tests set forth in ASTM D 1752 for Type I, except as otherwise specified herein.

2.05 BACKING ROD

A. Backing rod shall be an extruded closed-cell, polyethylene foam rod. The material shall be compatible with the joint sealant material used and shall have a tensile strength of not less than 40 psi and a compression deflection of approximately 25 percent at 8 psi. The rod shall be 1/8 inch larger in diameter than the joint width, except that a one-inch diameter rod shall be used for a 3/4-inch wide joint.

2.06 BOND BREAKER

A. Bond breaker shall be Super Bond Breaker as manufactured by Burke Company, San Mateo, California; Select Cure CRB as manufactured by Select Products Co., Upland, California; or acceptable equal. It shall contain a fugitive dye so that areas of application will be readily distinguishable.

2.07 SLIP DOWELS

A. Slip dowels in joints shall be A36 smooth epoxy-coated bars, conforming to ASTM A 775.

2.08 PVC TUBING

PVC tubing in joints shall be Sch. SDR 13.5, conforming to ASTM D 2241.

PART 3 EXECUTION

3.01 GENERAL

A. Waterstops of the type specified herein shall be embedded in the concrete across joints as shown. All waterstops shall be fully continuous for the extent of the joint. Splices necessary to provide such continuity shall be accomplished in conformance to printed instructions of manufacturer of the waterstops. The CONTRACTOR shall take suitable precautions and means to support and protect the waterstops during the progress of the work and shall repair or replace at its own expense any waterstops damaged during the progress of the work. All waterstops shall be stored so as to permit free circulation of air around the waterstop material.

B. When any waterstop is installed in the concrete on one side of a joint, while the other half or portion of the waterstop remains exposed to the atmosphere for more than 2 days, suitable precautions shall be taken to shade and protect the exposed waterstop from direct rays of the sun during the entire exposure and until the exposed portion of the waterstop is embedded in concrete.

3.02 SPLICES IN WATERSTOPS

A. Splices in waterstops shall be performed by heat sealing the adjacent waterstop sections in accordance with the manufacturer's printed instructions and recommendations. It is essential that:

1. The material not be damaged by heat sealing.

2. The splices have a tensile strength of not less than 60 percent of the unspliced material's tensile strength.

3. The continuity of the waterstop ribs and of its tubular center axis be maintained.

B. Butt joints of the ends of two identical waterstop sections may be made while the material is in the forms.

C. All joints with waterstops involving more than two ends to be jointed together, and all joints which involve an angle cut, alignment change, or the joint of two dissimilar waterstop sections shall be prefabricated by the CONTRACTOR prior to placement in the forms; allowing not less than 24-inch-long strips of waterstop

material beyond the joint. Upon being inspected and accepted, such prefabricated waterstop joint assemblies shall be installed in the forms and the ends of the 24-inch strip shall be butt welded to the straight run portions of waterstop in place in the forms.

D. Where a centerbulb waterstop intersects and is jointed with a non-centerbulb waterstop, care shall be taken to seal the end of the centerbulb, using additional PVC material if needed.

3.03 JOINT CONSTRUCTION

A. Setting Waterstops: In order to eliminate faulty installation that may result in joint leakage, particular care shall be taken of the correct positioning of the waterstops during installation.

1. Adequate provisions must be made to support and anchor the waterstops during the progress of the WORK and to insure the proper embedment in the concrete.

2. The symmetrical halves of the waterstops shall be equally divided between the concrete pours at the joints. The center axis of the waterstops shall be coincident with the joint openings.

3. Maximum density and imperviousness of the concrete shall be insured by thoroughly working it in the vicinity of all joints.

B. In placing flat-strip waterstops in the forms, means shall be provided to prevent them from being folded over by the concrete as it is placed.

1. Unless otherwise shown, all waterstops shall be held in place with light wire ties on 12-inch centers which shall be passed through the edge of the waterstop and tied to the curtain of reinforcing steel.

2. Horizontal waterstops, with their flat face in a vertical plane, shall be held in place with continuous supports to which the top edge of the waterstop shall be tacked. In placing concrete around horizontal waterstops, with their flat face in a horizontal plane, concrete shall be worked under the waterstops by hand so as to avoid the formation of air and rock pockets.

C. In placing centerbulb waterstops in expansion joints, the centerbulb shall be centered on the joint filler material.

D. Waterstop in vertical wall joints shall stop 6 inches from the top of the wall where such waterstop does not connect with any other waterstop and is not to be connected to for a future concrete placement.

E. Joint Location: Construction joints, and other types of joints, shall be provided where shown. When not shown, construction joints shall be provided at 60 foot maximum spacing for all concrete construction, unless noted otherwise. The location of all joints, of any type, shall be submitted for acceptance by the DISTRICT ENGINEER.

F. Joint Preparation: Special care shall be used in preparing concrete surfaces at joints where bonding between two sections of concrete is required. Unless otherwise shown, such bonding will be required at all horizontal joints in walls.

1. Surfaces shall be prepared in accordance with the requirements of Section 03300 - Cast-in-Place Concrete.

2. Except on horizontal wall construction joints, wall to slab joints or where otherwise shown or specified, at all joints where waterstops are required, the joint face of the first pour shall be coated with a bond breaker as specified herein.

G. Construction Joint Sealant: Construction joints in water-bearing floor slabs, and elsewhere as shown, shall be provided with tapered grooves which shall be filled with a construction joint sealant.

1. The material used for forming the tapered grooves shall be left in the grooves until just before the grooves are cleaned and filled with joint sealant.

2. After removing the forms from the groves, all laitance and fins shall be removed, and the groves shall

be sand-blasted.

3. The grooves shall be allowed to become thoroughly dry, after which they shall be blown out; immediately thereafter, they shall be primed, bond breaker tape placed in the bottom of the groove, and filled with the construction joint sealant.

4. The primer used shall be supplied by the same manufacturer supplying the sealant. No sealant will be permitted to be used without a primer.

5. Care shall be used to completely fill the sealant grooves.

6. Areas designated to receive a sealant fillet shall be thoroughly cleaned, as outlined for the tapered grooves, prior to application of the sealant.

H. The primer and sealant shall be placed strictly in accordance with the printed instructions and recommendations of the manufacturer, taking special care to properly mix the sealant prior to application. The sides of the sealant groove shall not be coated with bond breaker, curing compound, or any other substance which would interfere with proper bonding of the sealant. All sealant shall achieve final cure at least 7 days before the structure is filled with water.

I. All sealant shall be installed by a competent waterproofing specialty contractor who has a successful record of performance in similar installations. Before work is commenced, the crew doing the WORK shall be instructed as to the proper method of application by a representative or the sealant manufacturer.

J. Thorough, uniform mixing of 2-part, catalyst-cured materials is essential; special care shall be taken to properly mix the sealer before its application. Before any sealer is placed, the CONTRACTOR shall arrange to have the crew doing the WORK carefully instructed as to the proper method of mixing and application by a representative of the sealant manufacturer.

K. Any joint sealant which, after the manufacturer's recommended curing time for the job conditions of the WORK hereunder, fails to fully and properly cure shall be completely removed; the groove shall be thoroughly sandblasted to remove all traces of the uncured or partially cured sealant and primer, and shall be re-sealed with the specified joint sealant. All costs of such removal, joint treatment, re-sealing, and appurtenant work shall be at the expense of the CONTRACTOR.

END OF SECTION

SECTION 03300

CAST-IN-PLACE CONCRETE

PART 1 GENERAL

1.01 REQUIREMENTS

A. The CONTRACTOR shall furnish all materials for cast-in-place concrete in accordance with the provisions of this Section; and shall form, mix, place, cure, repair, finish, and do all other work as required to produce finished concrete, in accordance with the requirements of the Contract Documents.

B. The following types of concrete shall be covered in this Section:

1. Structural Concrete: Concrete to be used in all cases except where noted otherwise in the Contract Documents.

2. Site work Concrete: Concrete to be used for curbs, gutters, catch basin, sidewalks, pavements, fence and guard post embedment, underground duct bank encasement, and all other concrete appurtenant to electrical facilities unless otherwise shown.

3. Lean Concrete: Concrete to be used for thrust blocks, pipe trench cut-off blocks and cradles, where the preceding items are detailed on the Drawings as un-reinforced. Concrete to be used as protective cover for dowels intended for future connection.

C. The term “hydraulic” structure, used in these specifications, shall refer to environmental engineering concrete structures for the containment, treatment, or transmission of water, wastewater, or other fluids.

1.02 REFERENCE SPECIFICATIONS, CODES, AND STANDARDS

A. Codes: All codes, as referenced herein, are specified in Section 01090 - Reference Standards.

B. Federal Specifications:

1. UU-B-790A (1) (2) Building Paper, Vegetable Fiber (Kraft, Waterproofed, Water Repellant and Fire Resistant)

C. Commercial Standards:

1.	ACI 117	Standard Tolerances for Concrete Construction and Materials
2.	ACI 214	Recommended Practice for Evaluation of Strength Test Results of Concrete
3.	ACI 301	Specifications for Structural Concrete for Buildings
4.	ACI 309	Consolidation of Concrete
5.	ACI 315	Details and Detailing of Concrete Reinforcement
6.	ACI 318	Building Code Requirements for Reinforced Concrete
7.	ASTM C 31	Practices for Making and Curing Concrete Test Specimens in the Field
8.	ASTM C 33	Specification for Concrete Aggregates
9.	ASTM C 39	Test Method for Compressive Strength of Cylindrical Concrete Specimens
10.	ASTM C 94	Specification for Ready-Mixed Concrete
11.	ASTM C 136	Method for Sieve Analysis of Fine and Coarse Aggregates

12. ASTM C 143 Test Method for Slump of Hydraulic Cement Concrete

13. ASTM C 150 Specification for Portland Cement

14. ASTM C 156 Test Methods for Water Retention by Concrete Curing Materials

15. ASTM C 157 Test Method for Length Change of Hardened Hydraulic Cement Mortar and Concrete

16. ACTN C 192 Method of Making and Curing concrete Test Specimens in the Laboratory

17, ASTM C 260 Specification for Air-Entraining Admixtures for Concrete

18. ASTM C 309 Specifications for Liquid Membrane-Forming Compounds for Curing Concrete

19. ASTM C 494 Specification for Chemical Admixtures for Concrete

20. ASTM C 1077 Practice for Laboratories Testing Concrete and Concrete Aggregates for use in Construction and Criteria for Laboratory Evaluation

21. ASTM D 175 Specification for Preformed Expansion Joint Fillers for Concrete Paving and Structural Construction (Non-extruding and Resilient Bituminous Types)

22. ASTM D 2419 Test Method for Sand Equivalent Value of Soils and Fine Aggregate

23. ASTM E 119 Method for Fire Tests of Building Construction and Materials

24. Use the latest edition of the above reference standards as of the date of the project.

1.03 CONTRACTOR SUBMITTALS

A. Mix Designs: Prior to beginning the WORK and within 14 days of the Notice to Proceed, the CONTRACTOR shall submit to the DISTRICT ENGINEER, for review, preliminary concrete mix designs which shall show the proportions and gradations of all materials proposed for each class and type of concrete specified herein, in accordance with Section 01300 – Contractor Submittals.

   1. Mix designs shall be checked by an independent testing laboratory acceptable to the DISTRICT ENGINEER.

   2. All costs related to such checking shall be borne by the CONTRACTOR.

   3. Since laboratory trial batches require 35 calendar days to complete, the CONTRACTOR may consider testing more than one mix design for each class of concrete.

B. Delivery Tickets: Where ready-mix concrete is used, the CONTRACTOR shall furnish delivery tickets at the time of delivery of each load of concrete.

   1. Each ticket shall show the State certified equipment used for measuring and the total quantities, by weight, of cement, sand, each class of aggregate, admixtures, and the amounts of water in the aggregate added at the batching plant, and the amount allowed to be added at the site for the specific design mix.

   2. In addition, each ticket shall state the mix number, total yield in cubic yards, and the time of day, to the nearest minute, corresponding to the times when the batch was dispatched, when it left the plant, when it arrived at the site, when unloading began, and when unloading was finished.

C. Provide the following submittals in accordance with ACI 301:

   1. Mill tests for cement.

   2. Admixture certification. Chloride ion content must be included.

3. Aggregate gradation and certification.

4. Materials and methods for curing.

1.04 CONCRETE CONFERENCE

A. A meeting to review the detailed requirements of the CONTRACTOR'S proposed concrete design mixes and to determine the procedures for producing proper concrete construction shall be held no later than 14 days after the Notice to Proceed.

B. All Parties involved in the concrete work shall attend the conference, including but not limited to the following:

1. CONTRACTOR'S representative

2. Testing laboratory representative

3. Concrete subcontractor

4. Reinforcing steel subcontractor and detailer

5. Concrete supplier

6. Admixture manufacturer's representative

C. The conference shall be held at a mutually agreed upon time and place. The DISTRICT ENGINEER shall be notified no less than 5 days prior to the date of the conference.

1.05 QUALITY ASSURANCE

A. General

1. Tests on component materials and for compressive strength and shrinkage of concrete will be performed as specified herein. Test for determining slump will be in accordance with the requirements of ASTM C 143.

2. The costs of all laboratory tests on cement, aggregates, and concrete, will be borne by the OWNER. However, the CONTRACTOR shall be charged for the cost of an additional tests and investigation on work performed which does not meet the specifications. The laboratory must meet or exceed the requirements of ASTM C 1077.

3. Concrete for testing shall be supplied by the CONTRACTOR at no cost to the owner; and the CONTRACTOR shall provide assistance to the ENGINEER in obtaining samples, and disposal and cleanup of excess material.

B. Field Compression Tests:

1. Compression test specimens will be taken during construction, from the first placement of each class of concrete specified herein and at intervals thereafter as selected by the ENGINEER, to insure continued compliance with these specifications. Each set of test specimens will be a minimum of 4 cylinders.

2. Compression test specimens for concrete shall be made in accordance with section 9.2 of ASTM C 31. Specimens shall be 6-inch diameter by 12-inch-high cylinders.

3. Compression tests shall be performed in accordance with ASTM C 39. One test cylinder will be tested at 7 days and two at 28 days. The remaining cylinder will be held to verify test results, if needed.

C. Evaluation and Acceptance of Concrete:

1. Evaluation and acceptance of the compressive strength of concrete shall be according to the requirements of ACI 318, Chapter 5 "Concrete Quality", and as specified herein.

2. A statistical analysis of compression test results will be performed according to the requirements of ACI 214. The standard deviation of the test results shall not exceed 640 psi, when ordered at equivalent water content as estimated by slump.

3. If any concrete fails to meet these requirements, immediate corrective action shall be taken to increase the compressive strength for all subsequent batches of the type of concrete affected.

4. When the standard deviation of the test results exceeds 640 psi, the average strength for which the mix is designed shall be increased by an amount necessary to satisfy the statistical requirement that the probability of any test being more than 500 psi below or the average of any 3 consecutive tests being below the specified compressive strength is 1 in 100. The required average strength shall be calculated by Criterion No. 3 of ACI 214 using the actual standard of deviation.

5. All concrete which fails to meet the ACI requirements and these specifications, is subject to removal and replacement at the cost of the CONTRACTOR.

D. Shrinkage Tests:

1. Drying shrinkage tests will be made for the trail batch specified in the Paragraph in Part 2 entitled “Trial Batch and Laboratory Tests”, the first placement of each class of concrete, and during construction to ensure continued compliance with these Specifications.

2. Drying shrinkage specimens shall be 4-inch by 4-inch by 11-inch prisms with an effective gauge length of 10 inches, fabricated, cured, dried and measured in accordance with ASTM C 157 modified as follows: specimens shall be removed from molds at an age of 23 +/- 1 hours after trial batching, shall be placed immediately in water at 70 degrees F +/- 3 degrees F for at least 30 minutes, and shall be measured within 30 minutes thereafter to determine original length and then submerged in saturated lime water at 73 degrees F +/- 3 degrees F. Measurement to determine expansion expressed as a percentage of original length shall be made at age 7 days. This length at age 7 days shall be the base length for drying shrinkage calculations (“0” days drying age). Specimens then shall be stored immediately in a humidity control room maintained at 73 degrees F +/- 3 degrees F and 50 percent +/- 4 percent relative humidity for the remainder of the test. Measurements to determine shrinkage expressed as percentage of base length shall be made and reported separately for 7, 14, 21, and 28 days of drying after 7 days of moist curing.

3. The drying shrinkage deformation of each specimen shall be computed as the difference between the base length (at “0” days drying age) and the length after drying at each test age. The average drying shrinkage deformation of the specimens shall be computed to the nearest 0.0001 inch at each test age. If the drying shrinkage of any specimen departs from the average of that test age by more that 0.0004 inch, the results obtained from that specimen shall be disregarded. Results of the shrinkage test shall be reported to the nearest 0.0001 percent of shrinkage. Compression test specimens shall be taken in each case from the same concrete used for preparing drying shrinkage specimens. These tests shall be considered a part of the normal compression tests for the project. Allowable shrinkage limitations shall be as specified in Part 2, herein.

E. Construction Tolerances: The CONTRACTOR shall set and maintain concrete forms and perform finishing operations so as to ensure that the completed work is within the tolerances specified herein. Surface defects and irregularities are defined as finished and are to be distinguished from tolerances. Tolerance is the specified permissible variation from lines, grades, or dimensions shown. Where tolerances are not stated in the specifications, permissible deviations will be in accordance with ACI 117.

1. The following construction tolerances are hereby established and apply to finished walls and slabs unless otherwise shown:

Items	Tolerance
Variation of the constructed linear Outline from the established position in plan	in 10 feet: 1/4-inch; in 20 feet or more: 1/2-inch
Variation from the level or from the grades shown.	in 10 feet: 1/4-inch; In 20 feet or more: 1/2-inch

Variation from the plumb.	In 10 feet: 1/4-inch In 20 feet or more: 1/2-inch
Variation in the thickness of slabs and walls.	Minus 1/4-inch; Plus 1/2-inch
Variation in the locations and sizes of slabs and wall openings.	Plus or minus 1/4-inch

PART 2 PRODUCTS

2.01 CONCRETE MATERIALS

A. General:

1. All materials specified herein shall be classified as acceptable for potable water use by the Environmental Protection Agency within 30 days of application.

2. Materials shall be delivered, stored, and handled so as to prevent damage by water or breakage. Only one brand of cement shall be used. Cement reclaimed from cleaning bags or leaking containers shall not be used. All cement shall be used in the sequence of receipts of shipments.

B. All materials furnished for the work shall comply with the requirements of Sections 201, 203, and 204 of ACI 301, as applicable.

C. Storage of materials shall conform to the requirements of Section 205 of ACI 301.

D. Materials for concrete shall conform to the following requirements:

1. Cement shall be standard brand Portland cement conforming to ASTM C 150 for Type II or Type V, including Table 2 optional requirements.
   a. A minimum of 85 percent of cement by weight shall pass a 325 screen.
   b. A single brand of cement shall be used throughout the work, and prior to its use, the brand shall be acceptable to the DISTRICT ENGINEER.
   c. The cement shall be suitably protected from exposure to moisture until used.
   d. Cement that has become lumpy shall not be used.
   e. Sacked cement shall be stored in such a manner so as to permit access for inspection and sampling.
   f. Certified mill test reports, including fineness, for each shipment of cement to be used shall be submitted to the DISTRICT ENGINEER, if requested, regarding compliance with these Specifications.

2. Water for mixing and curing shall be potable, clean, and free from objectionable quantities of silty organic matter, alkali, salts and other impurities.
   a. The water shall be considered potable, for the purposes of this Section only, if it meets the requirements of the local governmental agencies.
   b. Agricultural water with high total dissolved solids (over 1000 mg/l TDS) shall not be used.

3. Aggregates shall be obtained from pits acceptable to the ENGINEER, shall be non-reactive, and shall conform to ASTM C 33. Maximum size or course aggregate shall be as specified herein. Lightweight sand for fine aggregate will not be permitted.
   a. Course aggregates shall consist of clean, hard, durable gravel, crushed gravel, crushed rock or a combination thereof. The course aggregates shall be prepared and handled in two or more size groups for combined aggregates with a maximum size greater than 3/4-inch. When aggregates are proportioned for each batch of concrete the two size groups shall be combined. See the Paragraph in Part 2 entitled “Trial Batch and Laboratory Tests” for the use of the size groups.
   b. Fine aggregates shall be natural sand or a combination of natural and manufactured sand that are hard and durable. When tested in accordance with ASTM D 2419, the sand equivalency shall not be less than 75 percent for an average of three samples, nor less than 70 percent for an individual test. Gradation of fine aggregate shall conform to ASTM C 33. The fineness modulus of sand

used shall not be over 3.00.

c. Combined aggregates shall be well graded from coarse to fine sizes, and shall be uniformly graded between screen sizes to produce a concrete that has optimum workability and consolidation characteristics. Where a trail batch is required for a mix design, the final combined aggregate gradations will be established during the trial batch process.
d. When tested in accordance with ASTM C 33, the ratio of silica released to reduction in alkalinity shall not exceed 1.0.
e. When tested in accordance with ASTM C 33, the fine aggregate shall produce a color in the supernatant liquid no darker than the reference standard color solution.
f. When tested in accordance with ASTM C 33, the course aggregate shall show a loss not exceeding 42 percent after 500 revolutions, or 10.5 percent after 100 revolutions.
g. When tested in accordance with ASTM C 33, the loss resulting after five cycles shall not exceed 10 percent for fine or coarse aggregate when using sodium sulfate.

4. Ready mix concrete shall conform to the requirements of ASTM C 94.

5. Admixtures: All admixtures shall be compatible and by single manufacturer capable of providing qualified field service representation. Admixtures shall be used in accordance with manufacturer's recommendations. If the use of an admixture is producing an inferior end result, the CONTRACTOR shall discontinue use of the admixture. Admixtures shall not contain thiocyanates nor more than 0.05 percent chloride ion, and shall be non-toxic after 30 days.
   a. Air-entraining agent meeting the requirements of ASTM C 260, shall be used. Sufficient air-entraining agent shall be used to provide a total air content of 5 to 7 percent. The OWNER reserves the right, at any time, to sample and test the air-entraining agent received on the job by the CONTRACTOR. The air-entraining agent shall be added to the batch in a portion of the mixing water. The solution shall be batched by means of a mechanical batcher capable of accurate measurement. Air content shall be tested at the point of placement. Air entraining agent shall be Micro-Air by Master Builder; Daravair by W. R. Grace; Sika AEA-15 by Sika Corporation; or acceptable equal.
   b. Waterproofing admixture shall be added at a rate of 2% by weight of Portland Cement in addition to other admixtures in the final concrete mix design for the tank walls, floor and roof. Admixture to be added to the concrete at the time of batching. A factory certified technician must supervise the admix operation at the batch plant to ensure quality control and approve warranties. Set controlling or water reducing admixtures as described below must be approved by the waterproofing admixture manufacturer. Waterproofing admixture shall be XYPEX Admix C-1000/C-2000; or acceptable equal.
   c. Set controlling and water reducing admixtures: Admixtures may be added at the CONTRACTOR'S option to control the set, effect water reduction, and increase workability. The addition of an admixture shall be at the CONTRACTOR'S expense. The use of an admixture shall be subject to acceptance by the DISTRICT ENGINEER. Concrete containing an admixture shall be first placed at a location determined by the DISTRICT ENGINEER. Admixtures specified herein shall conform to the requirements of ASTM C 494. The required quality of cement shall be used in the mix regardless of whether or not an admixture is used.
      (1) Concrete shall not contain more than one water reducing admixture. Concrete containing an admixture shall be first placed at a location determined by the DISTRICT ENGINEER.
      (2) Set controlling admixture shall be either with or without water-reducing properties. Where the air temperature at the time of placement is expected to be consistently over 80 degrees F, a set retarding admixture such as Plastocrete by Sika Corporation; Pozzolith 300R by Master Builders; Daratard by W. R. Grace; or acceptable equal shall be used. Where the air temperature at the time of placement is expected to be consistently under 40 degrees F, a non-corrosive set accelerating admixture such as Plastocrete 161FL by Sika Corporation; Pozzutec 20 by Master Builders; Daraset by W. R. Grace; or acceptable equal shall be used.
      (3) Normal range water reducer shall conform to ASTM C 494, Type A. WRDA 79 by W. R. Grace; Pozzolith 322-N by Master Builders; Plastocrete 161 by Sika Corporation; or acceptable equal. The quantity of admixture used and the method of mixing shall be in accordance with the Manufacturer's written instructions and recommendations.
      (4) High range water reducer shall conform to ASTM C 494, Type F or G. Daracem 100 or WDRA 19 by W.R. Grace; Sikament FF or Sikament 86 by Sika Corporation; Rheobuild 1000 or Rheobuild 716 by Master Builders; or acceptable equal. High range water reducer shall be added to the concrete after all other ingredients have been mixed and initial slump has been verified. No more than 14 ounces of water reducer per sack of cement shall be used. Water

reducer shall be considered as part of the mixing water when calculating water cement ratio.

(5) If the high range water reducer is added to the concrete at the job site, it may be used in conjunction with the same water reducer added at the batch plant. Concrete shall have a slump of 3 inches +/- 1/2-inch prior to adding the high range water reducing admixture at the job site. The high range water reducing admixture shall be accurately measured and pressure injected into the mixer as a single dose by an experienced technician. A standby system shall be provided and tested prior to each day's operation of the job site system.
(6) Concrete shall be mixed at mixing speed for a minimum of 30 mixer revolutions after the addition of the high range water reducer.
(7) Flyash: Flyash shall not be used.

6. Synthetic Fiber Reinforcement shall conform with ASTM C 1116; fiber length 1/2-inch.

2.02 CURING MATERIALS

A. Materials for curing concrete as specified herein shall conform to the following requirements and ASTM C 309:

1. All curing compounds shall be white pigmented and resin based. Sodium silicate compounds shall not be allowed. Concrete curing compound shall be Kurez by Euclid Chemical Company; MB-429 as manufactured by Master Builders; L & M Cure R; or acceptable equal. Water based resin curing compounds shall be used only where local air quality regulations prohibit the use of a solvent based compound. Water based curing compounds shall be Aqua-Cure by Euclid Chemical Company; Masterkure-W by Master Builders; L & M cure R-2; or acceptable equal.

2. Polyethylene sheet for use as concrete curing blanket shall be white, and shall have a nominal thickness of 6 mils. The loss of moisture when determined in accordance with the requirements of ASTM C 156 shall not exceed 0.055 grams per square centimeter of surface.

3. Polyethylene-coated waterproof paper sheeting for use as concrete curing blanket shall consist of white polyethylene sheeting free of visible defects, uniform in appearance, having a nominal thickness of 2 mils and permanently bonded to waterproof paper confirming to the requirements of Federal Specification UU-B-790A (1) (2). The loss of moisture, when determined in accordance with the requirements of ASTM C 156, shall not exceed 0.055 gram per square centimeter of surface.

4. Polyethylene-coated burlap for use as concrete curing blanket shall be 4-mil thick, white opaque polyethylene film impregnated or extruded into one side of the burlap. Burlap shall weight not less than 9 ounces per square yard. The loss of moisture, when determined in accordance with the requirements of ASTM C 156, shall not exceed 0.055 grams per square centimeter of surface.

5. Curing mats for use in Curing Method 6 as specified herein, shall be heavy shag rugs or carpets or cotton mats quilted at 4 inches on center. Curing mats shall weight a minimum of 12 ounces per square yard when dry.

6. Evaporation retardant shall be a material such as Confilm as manufactured by Master Builder; Eucobar as manufactured by Euclid Chemical Company; E-CON as manufactured by L & M Construction Chemicals, Inc.; or acceptable equal.

2.03 NON-WATERSTOP JOINT MATERIALS

A. Materials for non-waterstop joints in concrete shall conform to the following requirements:

1. Preformed joint filler shall be a non-extruding, resilient, bituminous type conforming to the requirements of ASTM D 1751.

2. Elastomeric joint sealer shall conform to the requirements of Section 07920 - Sealants and Caulking.

3. Mastic joint sealer shall be a material that does not contain evaporating solvents; that will tenaciously adhere to concrete surfaces; that will remain permanently resilient and pliable; that will not be affected by continuous presence of water, and will not in any way contaminate potable water; and will effectively seal the joints against moisture infiltration even when the joints are subject to movement due to

expansion and contraction.

a. The mastic joint sealer shall be composed of special asphalts or similar materials blended with lubricating and plasticizing agents to form a tough, durable mastic substance containing no volatile oils or lubricants and shall be capable of meeting the test requirements set forth hereinafter, if testing is required by the DISTRICT ENGINEER.

2.04 MISCELLANEOUS MATERIALS

A. Dampproofing agent shall be an asphalt emulsion, such as Hydrocide 600 by Sonneborn; Damp-proofing Asphalt Coating by Euclid Chemical Company; Sealmastic by W. R. Meadow Inc., or acceptable equal.

B. Bonding agents shall be epoxy adhesives conforming to the following products for the applications specified:

1. For bonding freshly-mixed, plastic concrete to hardened concrete, Sikadur 32 Hi-Mod Epoxy adhesive, as manufactured by Sika Corporation; Concresive Liquid (LPL), as manufactured by Master Builders; BurkEpoxy MV as manufactured by The Burke Company; or acceptable equal.

2. For bonding hardened concrete or masonry to steel, Sikadur 31 Hi-Mod Gel as manufactured by Sika Corporation; BurkEpoxy NS a manufactured by The Burke Company; Concresive Paste (LPL) as manufactured by Master Builders; or acceptable equal.

2.05 CONCRETE DESIGN REQUIREMENTS

A. General: Concrete shall be composed of cement, admixtures, aggregates and water. These materials shall be of the qualities specified. The exact proportions in which these materials are to be used for different parts of the work will be determined during the trial batch. In general, the mix shall be designed to produce a concrete capable of being deposited so as to obtain maximum density and minimum shrinkage and, where deposited in forms, to have good consolidation properties and maximum smoothness of surface. The aggregate gradations shall be formulated to provide fresh concrete that will not promote rock pockets around reinforcing steel or embedded items. The proportions shall be changed whenever necessary or desirable to meeting the required results at no additional cost to the OWNER. All changes shall be subject to review by the DISTRICT ENGINEER.

B. Fine Aggregate Composition: In mix designs for structural concrete, the percentage of fine aggregate to total aggregate by weight, shall be as indicated in the following table.

Fine Aggregate Fineness Modulus	Maximum Percent
2.7 or less	41
2.7 to 2.8	42
2.8 to 2.9	43
2.9 to 3.0	44

a. For other concrete, the maximum percentage of fine aggregate of total aggregate, by weight, shall not exceed 50.

C. Water-Cement Ratio and Compressive Strength: The minimum compressive strength and cement content of concrete shall be not less than that specified in the following tabulation.

Type of Work	Min 28-Day Compr. Strength (psi)	Max Size Aggregate (in)	Minimum Cement per cu yd (lbs)	Max W/C Ration (by weight)
Structural Concrete:				
Circular Tank Walls and Tank Roof	5,000	3/4	611	0.43

Tank floor slabs, columns, footing, and all other concrete items not specified elsewhere	4,000	1	564	0.45
Other Concretes:				
Sitework concrete	3,000	1	470	0.50
Lean concrete	2,000	1	376	0.60

NOTE: The CONTRACTOR is cautioned that the limiting parameters specified above are not a mix design. Additional cement or water reducing agent may be required to achieve workability demanded by the CONTRACTOR'S construction methods and aggregates. The CONTRACTOR is responsible for any costs associated with furnishing concrete with the required workability.

D. Concrete mix for tank roof shall include fiber mesh reinforcement, in addition to steel reinforcement.

E. Adjustments to Mix Design: The mixes used shall be changed whenever such change is necessary or desirable to secure the required strength, density, workability, and surface finish; and the CONTRACTOR shall be entitled to no additional compensation because of such changes.

2.06 CONSISTENCY

A. The quantity of water entering into a batch of concrete shall be just sufficient, with a normal mixing period, to produce a concrete which can be worked properly into place without segregation, and which can be compacted by the vibratory methods herein specified to give the desired density, impermeability and smoothness of surface. The quantity of water shall be changed as necessary, with variations in the nature or moisture content of the aggregates, to maintain uniform production of a desired consistency. The consistency of the concrete in successive batches shall be determined by slump tests in accordance with ASTM C 143. The slumps shall be as follows:

Part of Work	Slump (in)
All concrete, unless noted otherwise	3 inches +/- 1 inch
With high range water reducer added	7 inches +/- 2 inches
Ductbanks	5 inches +/- 1 inch

2.07 TRAIL BATCH AND LABORATORY TESTS

A. Before placing any concrete, a testing laboratory designated by the ENGINEER shall prepare a trial batch of each class of structural concrete, based on preliminary concrete mixes submitted by the CONTRACTOR.

1. During the trial batch the aggregate proportions may be adjusted by the testing laboratory using the two coarse aggregate size ranges to obtain the required properties.

2. If one size range produces an acceptable mix, a second size range need not be used.

3. Such adjustments shall be considered refinements to the mix design and shall not be the basis for extra compensation to the CONTRACTOR.

4. All concrete shall conform to the requirements of this Section, whether the aggregate proportions are from the CONTRACTOR'S preliminary mix design, or whether the proportions have been adjusted during the trial batch process.

5. The trial batch shall be prepared using the aggregates, cement and admixture proposed for the project. The trial batch materials shall be of a quantity such that the testing laboratory can obtain 3 drying shrinkage, and 6 compression test specimens from each batch.

6. Trial batch testing required shall be performed at the expense of the CONTRACTOR.

B. The determination of compressive strength will be made by testing 6-inch diameter by 12-inch-high cylinder; made, cured and tested in accordance with ASTM C 192 and ASTM C 39.

1. Three compression test cylinders will be tested at 7 day and three at 28 days.

2. The average compressive strength for the three cylinders tested at 28 days for any given trial batch shall not be less than 125 percent of the specified compressive strength.

C. A sieve analysis of the combined aggregate for each trial batch shall be performed according to the requirements of ASTM C 136. Values shall be given for percent passing each sieve.

2.08 SHRINKAGE LIMITATION

A. The maximum concrete shrinkage for specimens cast in the laboratory from the trial batch, as measured at 21 day drying age or at 28 day drying age, shall be 0.036 percent or 0.042 percent, respectively. The CONTRACTOR shall only use a mix design for construction that has first met the trial batch shrinkage requirements. Shrinkage limitations apply only to structural concrete.

B. The maximum concrete shrinkage for specimens cast in the field shall not exceed the trial batch maximum shrinkage requirements by more than 25 percent.

C. If the required shrinkage limitation is not met during construction, the CONTRACTOR shall take any or all of the following actions, at no additional cost to the OWNER, for securing specified shrinkage requirements. These actions may include changing the source or aggregates, cement and/or admixtures; reducing water content; washing of aggregate to reduce fines; increasing the number of construction joints; modifying the curing requirements; or other actions designed to minimize shrinkage or the effects of shrinkage.

2.09 MEASUREMENT OF CEMENT AND AGGREGATE

A. The amount of cement and of each separate size of aggregate entering into each batch of concrete shall be determined by direct weighing equipment furnished by the CONTRACTOR and acceptable to the DISTRICT ENGINEER.

B. Weighing tolerances:

Material	**Percent of Total Weight**
Cement	1
Aggregates	3
Admixtures	3

2.10 MEASUREMENT OF WATER

A. The quantity of water entering the mixer shall be measured by a suitable water meter or other measuring device of a type acceptable to the ENGINEER; and capable of measuring the water in variable amounts within a tolerance of one percent.

1. The water feed control mechanism shall be capable of being locked in position so as to deliver constantly any specified amount of water to each batch of concrete.

2. A positive quick acting valve shall be used for a cut off in the water line to the mixer.

3. The operating mechanism must be such that leakage will not occur when the valves are closed.

2.11 READY-MIX CONCRETE

A. At the CONTRACTOR'S option, ready-mixed concrete may be used meeting the requirements as to materials, batching, mixing, transporting, and placing as specified herein and in accordance with ASTM C 94, including the following supplementary requirements.

B. Ready-mixed concrete shall be delivered to the site or the work, and discharge shall be completed within one hour after the addition of the cement to the aggregates or before the drum has been revolved 250 revolutions, whichever is first.

C. Truck mixers shall be equipped with electrically-actuated counters by which the number of revolutions of the drum or blades may be readily verified. The counter shall be of the resettable, recording type, and shall be mounted in the driver's cab. The counters shall be actuated at the time of starting mixers at mixing speeds.

D. Each batch of concrete shall be mixed in a truck mixer for not less that 70 revolutions of the drum or blades at the rate of rotation designated by the manufacturer of equipment. Additional mixing, if any, shall be at the speed designated by the manufacturer of the equipment as agitating speed. All materials including mixing water shall be in the mixer drum before actuating the revolution counter for determining the number 8 of revolution of mixing.

E. Truck mixers and their operation shall be such that the concrete throughout the mixed batch as discharged is within acceptable limits of uniformity with respect to consistency, mix and grading.

1. If slump tests, taken at approximately the 1/4 and 3/4 points of the load during discharge, give slumps differing by more than one inch when the specified slump is 3 inches or less; or if they differ by more than 2 inches when the specified slump is more than 3 inches, the mixer shall not be used on the work unless the causing condition is corrected and satisfactory performance is verified by additional slump tests.

2. All mechanical details of the blades, speed of rotation, general mechanical condition of the unit, and clearance of the drum shall be checked before a further attempt to use the unit will be permitted.

F. Each batch of ready-mixed concrete delivered at the job site shall be accompanied by a delivery ticket furnished to the DISTRICT ENGINEER in accordance with the Paragraph in Part 1 entitled "Delivery Tickets".

G. The use of non-agitating equipment for transporting ready-mixed concrete will not be permitted. Combination truck and trailer equipment for transporting ready-mixed concrete will not be permitted. The quality and quantity of materials used in ready-mixed concrete and in batch aggregates shall be subject to continuous inspection at the batching plant by the DISTRICT ENGINEER.

PART 3 EXECUTION

3.01 PROPORTIONING AND MIXING

A. Proportioning: Proportioning of the concrete mix shall conform to the requirements of Chapter 3, "Proportioning" of ACI 301.

B. Mixing: Mixing of concrete shall conform to the requirements of Chapter 7 of said ACI 301 Specifications.

C. Slump: Maximum slumps shall be as specified herein.

D. Retempering: Retempering of concrete or mortar which has partially hardened shall not be permitted.

3.02 PREPARATION OF SURFACES FOR CONCRETING

A. Concrete on Earth: Earth surfaces shall be thoroughly wetted by sprinkling, prior to the placing of any concrete; and these surfaces shall be kept moist by frequent sprinkling up to the time of placing concrete thereon. The surface shall be free from standing water, mud, and debris at the time of placing concrete.

B. Joints in Concrete:

1. Concrete surfaces upon or against which concrete is to be placed, where the placement of the concrete has been stopped or interrupted so that, as determined by the ENGINEER, the new concrete cannot be incorporated integrally with that previously placed, are defined as construction joints.

2. The surfaces of horizontal joints shall be given a compacted, roughened surface for good bond. The joint surfaces shall be cleaned of all laitance, loose or defective concrete, foreign material, and roughened to a minimum 1/4-inch amplitude, except where the Drawings call for joint surfaces to be coated. Such cleaning and roughening shall be accomplished by hydro-blasting or sandblasting (exposing aggregate) followed by thorough washing. All pools of water shall be removed from the surface of construction joints before the new concrete is placed.

C. Placing Interruptions: When placing of concrete is to be interrupted long enough for the concrete to take a set, the working face shall be given a shape by the use of forms or other means; that will secure proper union with subsequent work; provided that construction joints shall be made only where acceptable to the DISTRICT ENGINEER.

D. Embedded items: No concrete shall be placed until all formwork, installation of parts to be embedded, reinforcement steel, and preparation of surfaces involved in the placing have been completed and accepted by the DISTRICT ENGINEER at least 4 hours before placement of concrete. All surfaces of forms and embedded items that have become encrusted with dried grout from concrete previously placed shall be cleaned of all such grout before the surrounding or adjacent concrete is placed.

E. All inserts or other embedded items shall conform to the requirements herein.

F. All reinforcement, anchor bolts, sleeves, inserts, and similar items shall be set and secured in the forms where shown or by shop drawings and shall be acceptable to the DISTRICT ENGINEER before any concrete is placed. Accuracy of placement is the responsibility of the CONTRACTOR.

G. Casting New Concrete against Old: Where concrete is to be cast against old concrete (any concrete which is greater than 60 days of age), the surface of the old concrete shall be thoroughly cleaned and roughened by hydro-blasting or sandblasting (exposing aggregate). The joint surface shall be coated with an epoxy bonding agent unless indicated otherwise by the DISTRICT ENGINEER.

H. No concrete shall be placed in any structure until all water entering the space to be filled with concrete has been properly cut off or has been diverted by pipes, or other means, and carried out of the forms, clear of the work. No concrete shall be deposited underwater nor shall the CONTRACTOR allow still water to rise on any concrete until the concrete has attained its initial set. Water shall not be permitted to flow over the surface of any concrete in such manner and at such velocity as will injure the surface finish of the concrete. Pumping or other necessary dewatering operations for removing ground water, if required, will be subject to the review of the DISTRICT ENGINEER.

I. Corrosion Protection: Pipe, conduit, dowels, and other ferrous items required to be embedded in concrete construction shall be so positioned and supported prior to placement of concrete that there will be a minimum of 2 inches clearance between said items and any part of the concrete reinforcement. Securing such items in position by wiring or welding those to the reinforcement will not be permitted.

J. Opening for pipes, inserts for pipe hangers and brackets, and setting of anchors, shall, where practicable, be provided for during the placing of concrete.

K. Anchor bolts shall be accurately set, and shall be maintained in position by templates while being embedded in concrete.

L. Cleaning: Surfaces of all metal work to be in contact with concrete shall be thoroughly cleaned of all dirt, grease, loose scale and rust, grout, mortar, and foreign substances immediately before concrete is place.

3.03 HANDLING, TRANSPORTING, AND PLACING

A. General: Placing of concrete shall conform to the applicable requirements of Chapter 8 of ACI 301 and requirements of this Section. No aluminum materials shall be used in conveying any concrete.

B. Non-conforming Work or Materials:

1. Concrete which, upon or before placing, is found not to conform to the requirements specified herein shall be rejected and immediately removed from the work.

2. Concrete which is not placed in accordance with these Specifications, or which is of inferior quality, shall be removed and replaced by and at the expense of the CONTRACTOR.

C. Unauthorized Placement: No concrete shall be placed except in the presence of duly authorized representative of the DISTRICT ENGINEER. The CONTRACTOR shall notify the DISTRICT ENGINEER in writing at least 24 hours in advance of placement of any concrete.

D. Placement in Wall and Column Forms:

1. Concrete shall not be dropped through reinforcement steel or into any deep form, nor shall concrete be placed in any form in such a manner as to leave accumulation of mortar on form surfaces above the placed concrete. In such cases, some means such as the use of hoppers and, if necessary, vertical ducts of canvas, rubber, or metal shall be used for placing concrete in the forms in a manner that it may reach the place of final deposit without separation.

2. In no case shall the free fall of concrete exceed 4 feet in walls and 8 feet in columns below the ends of ducts, chutes, or buggies.

3. Concrete shall be uniformly distributed during the process of depositing and in no case after depositing shall any portion be displaced in the forms more than 6 feet in horizontal direction.

4. Concrete in wall forms shall be deposited in uniform horizontal layers not deeper than 2 feet; and care shall be taken to avoid inclined layers or inclined construction joints except where such are required for sloping members.

5. Each layer shall be placed while the previous layer is still soft. The rate of placing concrete in wall forms shall not exceed 5 feet of vertical rise per hour.

6. Sufficient illumination shall be provided in the interior of all forms so that the concrete at the places of deposit is visible from the deck or runway.

E. Casting New Concrete Against Old: An epoxy adhesive bonding agent shall be applied to the old surfaces according to the manufacturer's written instructions and recommendations. This provision shall not apply to joints where waterstop is installed; see Section 03290 – Waterstop Joints in Concrete.

F. Conveyor Belts and Chutes:

1. All ends of chutes, hopper gates, and all other points of concrete discharge throughout the CONTRACTOR'S conveying, hoisting and placing system shall be so designed and arranged that concrete passing from them will not fall separated into whatever receptacle immediately receives it.

2. Conveyor belts, if used, shall be of a type acceptable to the DISTRICT ENGINEER.

3. Chutes longer than 50 feet will not be permitted.

4. Minimum slopes of chutes shall be such that concrete of the specified consistency will readily flow in them.

5. If a conveyor belt is used, it shall be wiped clean by a device operated in such a manner that none of the mortar adhering to the belt will be wasted.

6. All conveyor belts and chutes shall be covered.

G. Placement in Slabs: Concrete placed in sloping slabs shall proceed uniformly from the bottom of the slab to

the top, for the full width of the placement. As the work progresses, concrete shall be vibrated and carefully worked around the slab reinforcement, and surface of the slab shall be screened in an up-slope direction.

H. Temperature of Concrete:

1. The temperature of concrete when it is being placed shall be not more than 90 degrees F, not less than 55 degrees F for sections less than 12 inches thick, and not less than 50 degrees for all other sections.

2. Concrete ingredients shall not be heated to a temperature higher than that necessary to keep the temperature of the mixed concrete, as placed, from falling below the specified minimum temperature.

3. When the temperature of the concrete is 85 degrees F or above, the time between the introduction of the cement to the aggregates and discharge shall not exceed 45 minutes.

4. If concrete is placed when the weather is such that the temperature of the concrete would exceed 90 degrees F, the CONTRACTOR shall employ effective means, such as precooling of aggregates and mixing water using ice or placing at night, as necessary to maintain the temperature of the concrete, as it is placed, below 90 degrees F.

5. The CONTRACTOR shall be entitled to no additional compensation on account of the foregoing requirements.

I. Cold Weather Placement:

1. Placement of concrete shall conform to ACI 306.1 – Standard Specification for Cold Weather Concreting, and the following.

2. Remove all snow, ice and frost from the surfaces, including reinforcement, against which concrete is to be placed. Before beginning concrete placement, thaw the subgrade to a minimum depth of 6 inches. All reinforcement and embedded items shall be warmed to above 32 degrees F prior to concrete placement.

3. Maintain the concrete temperature above 50 degrees F for at least 3 days after placement.

3.04 PUMPING OF CONCRETE

A. General: If the pumped concrete does not produce satisfactory end results, the CONTRACTOR shall discontinue the pumping operation and proceed with the placing of concrete using conventional methods.

B. Pumping Equipment: The pumping equipment must have 2 cylinders and be designed to operate with one cylinder only in case the other one is not functioning. In lieu of this requirement, the CONTRACTOR may have a standby pump on the site during pumping.

C. The minimum diameter of the hose (conduits) shall be in accordance with ACI 304.2R.

D. Pumping equipment and hoses (conduits) that are not functioning properly, shall be replaced.

E. Aluminum conduits for conveying the concrete shall not be permitted.

F. Field Control: Concrete samples for slump, air content, and test cylinders will be taken at the placement (discharge) end of the line.

3.05 ORDER OF PLACING CONCRETE

A. The order of placing concrete in all parts of the work shall be acceptable to the DISTRICT ENGINEER.
1. In order to minimize the effects of shrinkage, the concrete shall be placed in units as bounded by construction joints shown.

2. The placing of units shall be done by placing alternate units in a manner such that each unit placed shall have cured at least 5 days for hydraulic structures and 2 days for all other structures before the contiguous unit or units are placed; except that corner sections of vertical walls shall not be placed until

2 adjacent wall panels have cured at least 10 days for hydraulic structures and 4 days for all other structures.

B. The surface of the concrete shall be level whenever a run of concrete is stopped.

1. To insure a level, straight joint on the exposed surface of walls, a wood strip at least 3/4-inch thick shall be tacked to the forms on these surfaces.

2. The concrete shall be carried about 1/2-inch above the underside of the strip.

3. About one hour after the concrete is placed, the strip shall be removed and any irregularities in the edge formed by the strip shall be leveled with a trowel and all laitance shall be removed.

3.06 TAMPING AND VIBRATING

A. As concrete is placed in the forms or in excavations, it shall be thoroughly settled and compacted, throughout the entire depth of the layer which is being consolidated, into a dense, homogeneous mass, filling all corners and angles, thoroughly embedding the reinforcement, eliminating rock pockets, and bringing only a slight excess of water to the exposed surface of concrete during placement.

1. Vibrators shall be Group 3 (per ACI 309) high speed power vibrators (8000 to 12,000 rpm) of an immersion type in sufficient numbers and with (at least one) standby units as required.

2. Group 2 vibrators may be used only at specific locations when accepted by the ENGINEER.

B. Care shall be used in placing concrete around waterstops.

1. The concrete shall be carefully worked by rodding and vibrating to make sure that all air and rock pockets have been eliminated.

2. Where flat-strip type waterstops are placed horizontally, the concrete shall be worked under the waterstops by hand, making sure that all air and rock pockets have been eliminated.

3. Concrete surrounding the waterstops shall be given additional vibration, over and above that used for adjacent concrete placement to assure complete embedment of the waterstops in the concrete.

C. Concrete in walls shall be internally vibrated and at the same time rammed, stirred or worked with suitable appliances, tamping bars, shovels, or forked tools until it completely fills the forms or excavations and closes snugly against all surfaces.

1. Subsequent layers of concrete shall not be place until the layers previously placed have been worked thoroughly as specified.

2. Vibrators shall be provided in sufficient numbers, with standby units as required, to accomplish results herein specified within 15 minutes after concrete of the prescribed consistency is placed in the forms.

3. The vibrating head shall be kept from contact with the surfaces of the forms.

4. Care shall be taken not to vibrate concrete excessively or to work it in any manner that causes segregation of its constituents.

3.07 FINISHING CONCRETE SURFACES

A. Surfaces shall be free from fins, bulges, ridges, offsets, honeycombing, or roughness of any kind, and shall present a finished, smooth, continuous hard surface.

1. Allowable deviations from plumb or level and from the alignment, profiles, and dimensions shown are defined as tolerances and are specified in Part 1, herein. These tolerances are to be distinguished from irregularities in finish as described herein.

2. Aluminum finishing tools shall not be used.

B. Formed Surfaces: No treatment is required after form removal except for curing, repair of defection concrete, and treatment of surface defects. Where architectural finish is required, it shall be as specified or as shown.

1. Surface holes larger than 1 inch in diameter or deeper than 1/4-inch are defined as surface defects in basins and exposed walls.

C. Unformed Surfaces: After proper and adequate vibration and tamping, all unformed top surfaces of slabs, floors, walls, and curbs shall be brought to a uniform surface with suitable tools. Immediately after the concrete has been screeded; it shall be treated with a liquid evaporation retardant. The retardant shall be used again after each work operation as necessary to prevent drying shrinkage cracks. The classes of finish specified for unformed concrete surfaces are designated and defined as follows:

1. Finish U1 – Sufficient leveling and screeding to produce an even, uniform surface with surface irregularities not to exceed 3/8 inch. No further special finish is required.

2. Finish U2 – After sufficient stiffening of the screeded concrete, surfaces shall be float finished with wood or metal floats or with a finishing machine using float blades.
   a. Excessive floating of surfaces while the concrete is plastic and dusting of dry cement and sand on the concrete to absorb excess moisture will not be permitted.
   b. Floating shall be the minimum necessary to produce a surface that is free from screed marks and is uniform in texture.
   c. Surface irregularities shall not exceed 1/4-inch.
   d. Joints and edges shall be tooled where shown or as determined by the ENGINEER.

3. Finish U3 – After the floated surface (as specified for Finish U2) has hardened sufficiently to prevent excess of fine material from being drawn to the surface, steel troweling shall be performed with firm pressure such as will flatten the sandy texture of the floated surface and produce a dense, uniform surface free from blemishes, ripples, and trowel marks. The finish shall be smooth and free of all irregularities.

4. Finish U4 – Steel trowel finish (as specified for Finish U3) without local depressions or high points.
   a. In addition, the surface shall be given a light hairbroom finish with brooming perpendicular to drainage unless other wise show.
   b. The resulting surface shall be rough enough to provide a nonskid finish.

5. Finish U5 – Float finish (as specified for Finish U2) without local depressions or high points.
   a. Immediately after concrete has lost the gloss or shine on the surface, rake surfaces with a standard rake with teeth no more than 1/2-inch in depth into the concrete.
   b. Raking shall be perpendicular to drainage, or as directed by the DISTRICT ENGINEER.

D. Unformed surfaces shall be finished according to the following schedule:

UNFORMED SURFACE FINISH SCHEDULE

Area	Finish
Grade slabs and foundations to be covered with concrete Or fill material	U1
Floors to be covered with grouted tile or topping grout	U2
Slabs which are water bearing	U3
Exterior slabs and walkways	U4
Slabs to be covered with built-up roofing or backfill	U2
Interior slabs and floors in vault structures	U3

Top surface of walls and exposed roof slabs U3

3.08 ARCHITECTURAL FINISH

A. General: Architectural finishes shall be required only where specifically called out on the drawings. In all other cases, paragraph 3.07, Finishing Concrete Surfaces, shall apply.

1. Immediately after the forms have been stripped, the concrete surface shall be inspected and any poor joints, voids, rock pockets, or other defective areas shall be repaired and all form-tie holes filled as specified herein.

2. Architectural finishes shall not be applied until the concrete surface has been repaired as required and the concrete has cured at least 14 days.

3. All architecturally treated concrete surfaces shall conform to the accepted sample required herein in texture, color, and quality. It shall be the CONTRACTOR'S responsibility to maintain and protect the concrete finish.

B. Smooth Concrete Finish

1. The concrete surface shall be wetted, and a grout shall be applied with a brush.
   a. The grout shall be made by mixing one part Portland cement and one part of fine sand that will pass a No. 16 sieve with sufficient water to give it the consistency of thick paint.
   b. The cement used in said grout shall be 1/2 gray and 1/2 white Portland cement, as determined by the DISTRICT ENGINEER. White Portland cement shall be Atlas white, or acceptable equal, furnished by the CONTRACTOR.
   c. Calcium chloride in the amount of 5 percent by volume of the cement shall be used in the brush coat.
   d. The freshly applied grout shall be vigorously rubbed into the concrete surface with a wood float filling all small air holes.
   e. After all the surface grout had been removed with a steel trowel, the surface shall be allowed to dry and, when dry, shall be vigorously rubbed with burlap to remove completely all surface grout so that there is no visible paint-like film of grout on the concrete.
   f. The entire cleaning operation for any area shall be completed the day it is started, and no grout shall be left on the surface overnight.

2. Cleaning operations for any given day shall be terminated at panel joints. It is essential that the various operations be carefully timed to secure the desired effect which is light-colored concrete surface of uniform color and texture without any appearance of a paint or grout film.

3. In the event that improper manipulation results in an inferior finish, the CONTRACTOR shall rub such inferior area with caborundum bricks.

4. Before beginning any of the final treatment on exposed surfaces, the CONTRACTOR shall treat in a satisfactory manner a trial area of at least 200 square feet in some inconspicuous place selected by the DISTRICT ENGINEER and shall preserve said trial area undisturbed until the completion of the job.

C. Sandblasted Concrete Finish

1. Sandblasting shall be done in a safe manner acceptable to local authorities and per OSHA requirements. The sandblasting shall be a light sandblast to remove laitance and to produce a uniform fine aggregate surface texture with approximately 1/32 to 1/16 inch of surface sandblasted off. Corners, patches, form panel joints, and soft spots shall be sandblasted with care.

2. A 3 square foot sample panel of the sandblasted finish shall be provided by the CONTRACTOR for acceptance by the DISTRICT ENGINEER prior to starting the sandblasting work.
   a. The sample panel shall include a corner, plugs, and joints and shall be marked after approval.
   b. All other sandblasting shall be equal in finish to the sample panel.

3. Protection against sandblasting shall be provided on all surfaces and materials not requiring sandblasting but within or adjacent to areas being sandblasted. After sandblasting, the concrete

surfaces shall be washed with clean water and excess sand removed.

3.09 CURING AND DAMPPROOFING

A. General: All concrete shall be cured for not less than 7 days after placing, in accordance with the methods specified herein for the different parts of the work, and described in detail in the following paragraphs:

Surface to be Cured or Dampproofed	Method
Unstripped forms	1
Wall sections with forms removed	4
Construction joints between footings and walls, and between floor slab and columns	2
Encasement concrete and thrust blocks	3
All concrete surfaces not specifically provided for elsewhere in this paragraph	4
Floor slabs on grade in hydraulic structures	5
Roof and slabs not on grade	6

B. Method 1: Wooden forms shall be wetted immediately after concrete has been placed and shall be kept wet with water until removed. If steel forms are used the exposed concrete surfaces shall be kept continuously wet until the forms are removed. If forms are removed within 7 days of placing the concrete, curing shall be continued in accordance with Method 6, herein.

C. Method 2: The surface shall be covered with burlap mats which kept wet with water for the duration of the curing period, until the concrete in the walls has been placed. No curing compound shall be applied to surfaces cured under Method 2.

D. Method 3: The surface shall be covered with moist earth not less than 4 hours, or more than 24 hours, after the concrete is placed. Earthwork operations that may damage the concrete shall not begin until at least 7 days after placement of concrete.

E. Method 4: The surface shall be sprayed with a liquid curing compound.

1. It shall be applied in accordance with the manufacturer's printed instructions at a maximum coverage rate of 200 square feet per gallon and in such a manner as to cover the surface with a uniform film which will seal thoroughly.

2. Where the curing compound method is used, care shall be exercised to avoid damage to the seal during the 7-day curing period. Should the seal be damaged or broken before the expiration of the curing period, the break shall be repaired immediately by the application of additional curing compound over the damaged portion.

3. Wherever curing compound may have been applied by mistake to surfaces against which concrete subsequently is to be placed and to which it is to adhere, said compound shall be entirely removed by wet sandblasting just prior to the placing of new concrete.

4. Where curing compound is specified, it shall be applied as soon as the concrete has hardened enough to prevent marring on unformed surfaces, and within 2 hours after removal of forms from contact with formed surfaces.
   a. Repairs required to be made to formed surfaces shall be made within the said 2-hour period; provided, however, that any such repairs which cannot be made within the said 2-hour period shall be delayed until after the curing compound has been applied.
   b. When repairs are to be made to an area on which curing compound has been applied, the area

involved shall first be wet-sandblasted to remove the curing compound, following which repairs shall be made as specified herein.

5. At all locations where concrete is placed adjacent to a panel which has been coated with curing compound, the previously coated panel shall have curing compound reapplied to an area within 6 feet of the joint and to any other location where the curing membrane has been disturbed.

6. Prior to final acceptance of the WORK, all visible traces of curing compound shall be removed from all surfaces in such a manner that does not damage surface finish.

F. Method 5:

1. Until the concrete surface is covered with curing compound, the entire surface shall be kept damp by applying water using nozzles that atomize the flow so that the surface is not marred or washed.
   a. The concrete shall be given a coat of curing compound in accordance with Method 4, herein.
   b. Not less than one hour or more than 4 hours after the coat of curing compound has been applied, the surface shall be wetted with water delivered through a fog nozzle, and concrete-curing blankets shall be placed on the slabs.
   c. The curing blankets shall be polyethylene-coated burlap.
   d. The blankets shall be laid with the edges butted together and with the joints between strips sealed with 2-inch-wide strips of sealing tape or with edges lapped not less than 3 inches and fastened together with a waterproof cement to form a continuous watertight joint.

2. The curing blankets shall be left in place during the 7-day curing period and shall not be removed until after concrete for adjacent work has been placed.
   a. Should the curing blankets become torn or otherwise ineffective, the CONTRACTOR shall replace damaged sections.
   b. During the first 3 days of the curing period, no traffic of any nature and no depositing, temporary or otherwise of any materials shall be permitted on the curing blankets.
   c. During the remainder of the curing period, foot traffic and temporary deposition of materials that impose light pressure will be permitted only on top of plywood sheets 5/8-inch minimum thickness, laid over the curing blanket.
   d. The CONTRACTOR shall add water under the curing blanket as often as necessary to maintain damp concrete surfaces at all times.

G. Method 6: This method applies to both walls and slabs.

1. The concrete shall be kept continuously wet by the application of water for a minimum period of at least 7 consecutive days beginning immediately after the concrete has reached final set or forms have been removed. Until the concrete surface is covered with the curing medium, the entire surface shall be

   kept damp by applying water using nozzles that atomize the flow so that the surface is not marred or washed.

2. Heavy curing mats shall be used as a curing medium to retain the moisture during the curing period.
   a. The curing medium shall be weighted or otherwise held in place to prevent being dislodged by wind or any other causes and to be substantially in contact with the concrete surface.
   b. All edges shall be continuously held in place.

3. The curing blankets and concrete shall be kept continuously wet by the use of sprinklers or other means both during and after normal working hours.

4. Immediately after the application of water has terminated at the end of the curing period, the curing medium shall be removed, any dry spots shall be rewetted, and curing compound shall be immediately applied in accordance with Method 4, herein.
5. The CONTRACTOR shall dispose of excess water from the curing operation to avoid damage to the work.

H. Dampproofing

1. The exterior surface of all buried roof slabs shall be dampproofed as follows.

2. Immediately after completion of curing, the surface shall be sprayed with a dampproofing agent consisting of an asphalt emulsion.

    a. Application shall be in 2 coats.
    b. The first coat shall be diluted to 1/2 strength by the addition of water and shall be sprayed on so as to provide a maximum coverage rate of 100 square feet per gallon of dilute solution.
    c. The second coat shall consist of an application of the specified material, undiluted, and shall be sprayed on so as to provide a maximum coverage rate of 100 square feet per gallon.
    d. Dampproofing material shall be as specified herein.

3. As soon as the asphalt emulsion, applied as specified herein, has taken an initial set, the entire area thus, coated shall be coated with whitewash.
    a. Any formula for mixing the whitewash may be used which produces a uniformly coated white surface and which so remains until placing of the backfill.
    b. Should the whitewash fail to remain on the surface until the backfill is placed, the CONTRACTOR shall apply additional whitewash.

3.10 PROTECTION

A. The CONTRACTOR shall protect all concrete against injury until final acceptance by the OWNER.

B. Fresh concrete shall be protected from damage due to rain, hail, sleet, or snow. The CONTRACTOR shall provide such protection while the concrete is still plastic and whenever such precipitation is imminent or occurring.

3.11 CURING IN COLD WEATHER

A. Water curing of concrete may be reduced to 6 days during periods when the mean daily temperature in the vicinity of the worksite is less than 40 degrees F; provided that, during the prescribed period of water curing, when temperatures are such that concrete surfaces may freeze, water curing shall be temporarily discontinued.

B. Concrete cured by an application of curing compound will require no additional protection from freezing if the protection at 50 degrees F for 72 hours is obtained by means of approved insulation in contact with the forms or concrete surfaces; otherwise, the concrete shall be protected against freezing temperatures for 72 hours immediately following 72 hours protection at 50 degrees F.

    1. Concrete cured by water curing shall be protected against freezing temperatures for 3 days immediately following the 72 hours of protection at 50 degrees F.

C. Discontinuance of protection against freezing temperatures shall be such that the drop in temperature of any portion of the concrete will be gradual and will not exceed 40 degrees F in 24 hours.

    1. In the spring, when the mean daily temperature rises above 40 degrees F for more than 3 successive days, the specified 72-hour protection at a temperature not lower than 50 degrees F may be discontinued for as long as the mean daily temperature remains above 40 degrees F; provided, that the concrete shall be protected against freezing temperatures for not less than 48 hours after placement.

D. Where artificial heat is employed, special care shall be taken to prevent the concrete from drying.

    1. Use of unvented heaters will be permitted only when unformed surfaces of concrete adjacent to the heaters are protected for the first 24 hours from an excessive carbon dioxide atmosphere by application of curing compound; provided, that the use of curing compound for such surfaces is otherwise permitted by these Specifications.

3.12 TREATMENT OF SURFACE DEFECTS

A. As soon as forms are removed, all exposed surfaces shall be carefully examined and any irregularities shall be immediately rubbed or ground in a satisfactory manner in order to secure a smooth, uniform, and continuous surface.

    1. Plastering or coating of surfaces to be smoothed will not be permitted.

2. No repairs shall be made until after inspection by the ENGINEER.

3. In no case will extensive patching of honeycombed concrete be permitted.

4. Concrete containing minor voids, holes, honeycombing, or similar depression defects shall have them repaired as specified herein.

5. Concrete containing extensive voids, holes, honeycombing or similar depression defects, shall be completely removed and replaced.

6. All repairs and replacements herein specified shall be promptly executed by the CONTRACTOR at its own expense.

B. Defective surfaces to be repaired shall be cut back from trueline a minimum depth of 1/2-inch over the entire area. Feathered edges will not be permitted.

1. Where shipping or cutting tools are not required in order to deepen the area properly, the surface shall be prepared for bonding by the removal of all laitance or soft material, and not less than 1/32 inch depth of the surface film from all hard portions, by means of an efficient sandblast.

2. After cutting and sandblasting, the surface shall be wetted sufficiently in advance of shooting with shotcrete or with cement mortar so that while the repair material is being applied, the surfaces under repair will remain moist, but not so wet as to overcome the suction upon which a good bound depends.

3. The material used for repair proposed shall consist of a mixture of one sack of cement to 3 cubic feet of sand.

4. For exposed walls, the cement shall contain such a proportion of Atlas white Portland cement as is required to make the color of the patch match the color of the surrounding concrete.

C. Holes left by tie-rod cones shall be reamed with suitable toothed reamers so as to leave the surfaces of the holes clean and rough.

1. These holes then shall be repaired in an approved manner with dry packed cement grout.

2. Holes left by form tying devices having a rectangular cross section, and other imperfections having a depth greater than their least surface dimension, shall not be reamed but shall be repaired in an approved manner with dry packed cement grout.

D. All repairs shall be built up and shaped in such a manner that the completed work will conform to the requirements of this Section, as applicable, using acceptable methods which will not disturb the bound, cause sagging, or cause horizontal fractures. Surfaces of said repairs shall receive the same kind and amount of curing treatment as required for the concrete in the repaired section.

E. Prior to filling any structure with water, all cracks that may have developed shall be “vee’d” as shown and filled with sealant conforming to the requirements of Section 03290 - Joints in Concrete.

1. This repair method shall be done on the water bearing face of members.

2. Prior to backfilling, faces of members in contact with fill, which are not covered with a waterproofing membrane, shall also have cracks repaired as specified herein.

3.13 PATCHING HOLES IN CONCRETE

A. Patching Small Holes:

1. Holes which are less than 12 inches in their least dimension and extend completely through concrete members, shall be filled as specified herein.

2. Small holes in members which are water-bearing or in contact with soil or other fill material, shall be filled with no-shrink grout. Where a face of the member is exposed to view, the non-shrink grout shall be held back 2 inches from the finished surface. The remaining 2 inches shall then be patched

according to the Paragraph in Part 3 entitled “Treatment of Surface Defects.”

3. Small holes through all other concrete members shall be filled with non-shrink grout, with exposed faces treated as above.

B. Patching Large Holes:

1. Holes which are larger than 12 inches in their least dimension, shall have a keyway chipped into the edge of the opening all around, unless a formed keyway exists. The holes shall then be filled with concrete as specified herein.

2. Holes which are larger than 24 inches in their least dimension and which do not have reinforcing steel extending from the existing concrete, shall have reinforcing steel set in grout in drilled holes. The reinforcing added shall match the reinforcing in the existing wall unless shown otherwise.

C. Large holes in member which are water bearing or in contact with soil or other fill, shall have a bentonite type waterstop material placed around the perimeter of the hole as specified in the Section 03290, “Waterstop Joints in Concrete”, unless there is an existing waterstop in place.

3.14 CARE AND REPAIR OF CONCRETE

A. The CONTRACTOR shall protect all concrete against injury or damage from excessive heat, lack of moisture, overstress, or any other cause until final acceptance by the OWNER.

1. Particular care shall be taken to prevent the drying of concrete and to avoid roughening or otherwise damaging the surface.

2. Any concrete found to be damaged, or which may have been originally defective, or which becomes defective at any time prior to the final acceptance of the completed WORK, or which departs from the established line or grade, or which, for any other reason, does not conform to the requirements of the Contract Documents, shall be satisfactorily repaired or removed and replaced with acceptable concrete at the CONTRACTOR’S expense.

END OF SECTION

DIVISION 05

METAL WORK

SECTION 05200

MISCELLANEOUS METAL WORK

PART 1 GENERAL

1.01 SECTION INCLUDES

A. Miscellaneous metal trim, framing, supports, and appurtenant items.

B. Anchor bolts and other anchorage fastening devices.

C. Grouting under base plates.

1.02 MEASUREMENT AND PAYMENT

A. See Section 02100 - Measurement and Payment.

1.03 REFERENCES

A. AISC M016 - ASD Manual of Steel Construction; American Institute of Steel Construction, Inc.

B. AISC S303 - Code of Standard Practice for Steel Buildings and Bridges; American Institute of Steel Construction, Inc.

C. AISC S329 - Allowable Stress Design Specification for Structural Joints Using ASTM A325 or A490 Bolts; American Institute of Steel Construction, Inc.

D. ASTM A 36 - Standard Specification for Carbon Structural Steel.

E. ASTM A 53 - Standard Specification for Pipe, Steel, Black and Hot-Dipped, Zinc-Coated, Welded and Seamless.

F. ASTM A 108 - Standard Specification for Steel Bars, Carbon, Cold Finished, Standard Quality.

G. ASTM A 123 - Standard Specification for Zinc (Hot-Dip Galvanized) Coatings on Iron and Steel Products.

H. ASTM A 153 - Standard Specification for Zinc Coating (Hot-Dip) on Iron and Steel Hardware.

I. ASTM A 167 - Standard Specification for Stainless and Heat-Resisting Chromium-Nickel Steel Plat, Sheet, and Strip.

J. ASTM A 240 - Standard Specification for Heat-Resisting Chromium and Chromium-Nickel Stainless Steel Plate, Sheet, and Strip for Pressure Vessels.

K. ASTM A 307 - Standard Specification for Carbon Steel Bolts and Studs, 60 000 PSI Tensile Strength.

L. ASTM A 325 - Standard Specification for Structural Bolts, Steel, Heat Treated, 120/105 ksi Minimum Tensile Strength.

M. ASTM A 480 - Standard Specification for General Requirements for Flat-Rolled Stainless and Heat-Resisting Steel Plate, Sheet, and Strip.

N. ASTM A 500 - Standard Specification for Cold-Formed Welded and Seamless Carbon Steel Structural Tubing in Rounds and Shapes.

O. ASTM A 501 - Standard Specification for Hot-Formed Welded and Seamless Carbon Steel Structural Tubing.

P. ASTM A 563 - Standard Specification for Carbon and Alloy Steel Nuts.

Q. ASTM A 570 - Standard Specification for Steel, Sheet and Strip, Carbon, Hot-Rolled, Structural Quality.

R. ASTM C 1107 - Standard Specification for Packaged Dry, Hydraulic-Cement Grout (Nonshrink).

S. ASTM F 436 - Standard Specification for Hardened Steel Washers.

T. AWS A2.4 - Standard Symbols for Welding, Brazing, and Nondestructive Examination; American Welding Society.

U. AWS D1.1 - Structural Welding Code - Steel; American Welding Society.

V. SSPC-Paint 15 - Steel Joist Shop Paint; Society for Protective Coatings (Part of Steel Structures Painting Manual, Vol. Two).

W. Use the latest edition of the above reference standards as of the date of the project.

1.04 SUBMITTALS

A. See Section 01300 - Administrative Requirements, for submittal procedures.

B. Shop Drawings:

1. Indicate profiles, sizes, spacing, locations of structural members, openings, attachments, and fasteners.

2. Connections not detailed.

3. Indicate cambers and loads.

4. Indicate welded connections with AWS A2.4 welding symbols. Indicate net weld lengths.

C. Manufacturer's Mill Certificate: Certify that products meet or exceed specified requirements.

D. Welders Certificates: Certify welders employed on the Work, verifying AWS qualification within the previous 12 months.

1.05 QUALITY ASSURANCE

A. Take field measurements prior to preparation of shop drawings and fabrication to ensure proper fitting of work.

B. Fabricate miscellaneous steel members in accordance with AISC M016.

C. Comply with Section 10 of AISC S303 for architecturally exposed structural steel.

D. Maintain one copy of each document on site.

E. Fabricator: Company specializing in performing the work of this section with minimum three years of documented experience.

F. Erector: Company specializing in performing the work of this section with minimum three years of documented experience.

G. Design connections not detailed on the drawings under direct supervision of a Professional Structural Engineer experienced in design of this work and licensed in the State of Utah.

1.06 REGULATORY REQUIREMENTS

A. Conform to applicable requirements of the International Building Code.

B. Conform to applicable requirements of the Powder Mountain Water and Sewer Improvement District, Powder Mountain, Utah.

PART 2 PRODUCTS

2.01 MATERIALS

A. Structural Steel Members: ASTM A 36.

B. Cold-Formed Structural Tubing: ASTM A 500, Grade A.

C. Hot-Formed Structural Tubing: ASTM A 501, seamless.

D. Steel Bars: ASTM A 108.

E. Steel Plate: ASTM A 514.

F. Steel Sheet: ASTM A 570 hot-rolled, or ASTM A 611 cold-rolled.

G. Stainless Steel: ASTM A 167.

H. Pipe: ASTM A 53, Grade B, Finish black.

I. Shear Stud Connectors: ASTM A 108, Grade 1015.

J. Carbon Steel Bolts and Nuts: ASTM A 307, Grade A galvanized to ASTM A 153, Class C for galvanized structural members.

K. High-Strength Bolts, Nuts, and Washers: ASTM A 325, Type 1, plain.

L. Anchor Bolts: ASTM A 307, Grade C.

M. High-Strength Anchor Bolts: ASTM A 325, Type 1 plain.

N. Welding Materials: AWS D1.1; type required for materials being welded.

O. Grout: Non-shrink, non-metallic aggregate type, complying with ASTM C 1107 and capable of developing a minimum compressive strength of 7,000 psi at 28 days.

P. Shop and Touch-Up Primer: Fabricator's standard.

Q. Touch-Up Primer for Galvanized Surfaces: Fabricator's standard.

2.02 FABRICATION

A. Shop fabricate to greatest extent possible.

B. Continuously seal joined members by continuous welds. Grind exposed welds smooth.

C. Fabricate connections for bolt, nut, and washer connectors.

D. Develop required camber for members.

E. Provide inserts and anchoring devices which must be set in concrete or built into masonry for installation of miscellaneous metal work.

2.03 FINISH

A. Prepare structural component surfaces in accordance with SSPC SP.

B. Galvanize structural steel members to comply with ASTM A 123/A 123M. Provide minimum 1.8 oz/sq ft galvanized coating.

2.04 SOURCE QUALITY CONTROL AND TESTS

A. Provide shop testing and analysis of structural steel.

B. Welded Connections: Visually inspect all shop-welded connections and test welds using one of the following:

1. Radiographic testing per ASTM E 94 and ASTM E 142.

2. Ultrasonic testing per ASTM E 164.

PART 3 EXECUTION

3.01 EXAMINATION

A. Verify that conditions are appropriate for erection of structural steel and that the work may properly proceed.

3.02 ERECTION

A. Erect miscellaneous steel items in compliance with AISC S303.

B. Allow for erection loads, and provide sufficient temporary bracing to maintain structure in safe condition, plumb, and in true alignment until completion of erection and installation of permanent bracing.

C. Field weld components and shear studs indicated on shop drawings.

D. Use carbon steel bolts only for temporary bracing during construction, unless otherwise specifically permitted on drawings. Install high-strength bolts in accordance with AISC S329.

E. Do not field cut or alter structural members without approval of Engineer.

F. After erection, prime welds, abrasions, and surfaces not shop primed, except surfaces to be in contact with concrete.

G. Grout solidly between column plates and bearing surfaces, complying with manufacturer's instructions for non-shrink grout. Trowel grouted surfaces smooth, splaying neatly to 45 degrees.

3.03 ERECTION TOLERANCES

A. Maximum Variation from Plumb: 1/4 inch.

B. Maximum Offset from True Alignment: 1/4 inch.

END OF SECTION

DIVISION 09

FINISHES

SECTION 09900

PAINTS AND COATINGS

PART 1 GENERAL

1.01 SECTION INCLUDES

A. Surface preparation.

B. Field application of paints and other coatings.

C. Painting materials and methods for conduit identification specified in Section 16075.

D. See Schedule - Surfaces to be Finished, at end of Section.

1.02 REFERENCES

A. ASTM D 16 - Standard Terminology Relating to Paint, Varnish, Lacquer, and Related Products.

B. ASTM D 4442 - Standard Test Methods for Direct Moisture Content Measurement of Wood and Wood-Base Materials.

C. AWWA D 102 - Painting Steel Water-Storage Tanks.

D. NSF/ANSI 61 - Drinking Water System Components.

E. PDCA (MAN) - Architectural Specification Manual; Painting and Decorating Contractors of America.

F. SSPC (PM1) - Steel Structures Painting Manual, Vol. 1, Good Painting Practice; Society for Protective Coatings.

G. SSPC (PM2) - Steel Structures Painting Manual, Vol. 2, Systems and Specifications; Society for Protective Coatings.

H. Use the latest edition of the above reference standards of as the date of the project.

1.03 DEFINITIONS

A. Conform to ASTM D 16 for interpretation of terms used in this section.

1.04 SUBMITTALS

A. See Section 01300 - Administrative Requirements, for submittal procedures.

B. Product Data: Provide data on all finishing products.

C. Samples: Submit two paper chip samples, 2 x 2 inch in size illustrating range of colors and textures available for each surface finishing product scheduled.

D. Manufacturer's Instructions: Indicate special surface preparation procedures.

E. Maintenance Data: Submit data on cleaning, touch-up, and repair of painted and coated surfaces.

1.05 QUALITY ASSURANCE

A. Manufacturer Qualifications: Company specializing in manufacturing the Products specified in this section with minimum three years documented experience.

B. Applicator Qualifications: Company specializing in performing the work of this section with minimum three years experience.

C. All products in contact with potable water shall have ANSI/NSF 61 certification.

1.06 REGULATORY REQUIREMENTS

A. Conform to applicable code for flame and smoke rating requirements for products and finishes.

1.07 DELIVERY, STORAGE, AND PROTECTION

A. Deliver products to site in sealed and labeled containers; inspect to verify acceptability.

B. Container Label: Include manufacturer's name, type of paint, brand name, lot number, brand code, coverage, surface preparation, drying time, cleanup requirements, color designation, and instructions for mixing and reducing.

C. Paint Materials: Store at minimum ambient temperature of 45 degrees F and a maximum of 90 degrees F, in ventilated area, and as required by manufacturer's instructions.

1.08 ENVIRONMENTAL REQUIREMENTS

A. Do not apply materials when surface and ambient temperatures are outside the temperature ranges required by the paint product manufacturer.

B. Do not apply exterior coatings during rain or snow, or when relative humidity is outside the humidity ranges required by the paint product manufacturer.

C. Minimum Application Temperatures for Latex Paints: 45 degrees F for interiors; 50 degrees F for exterior; unless required otherwise by manufacturer's instructions.

D. Provide lighting level of 80 foot-candles measured mid-height at substrate surface.

1.09 EXTRA MATERIALS

A. See Section 01600 - Product Requirements, for additional provisions.

B. Supply 1 gallon of each color; store where directed.

C. Label each container with color in addition to the manufacturer's label.

PART 2 PRODUCTS

2.01 MANUFACTURERS

A. Paints:

1. Benjamin Moore & Co.

2. Devoe Coatings

3. Sherwin-Williams Co.

B. Coatings:

1. Tnemec.

C. Substitutions: See Section 01600 - Product Requirements.

2.02 PAINTS AND COATINGS - GENERAL

A. Paints and Coatings: Ready mixed, except field-catalyzed coatings. Prepare pigments:

1. To a soft paste consistency, capable of being readily and uniformly dispersed to a homogeneous coating.

2. For good flow and brushing properties.

3. Capable of drying or curing free of streaks or sags.

B. Colors to be selected by Owner from manufacturer's standard colors.

2.03 PAINT SYSTEMS - EXTERIOR

A. Paint WE-OP-3A - Wood, Opaque, Alkyd, 3 Coat:

1. One coat of alkyd primer sealer.

2. Semi-gloss: Two coats of alkyd enamel.

B. Paint WE-OP-3L - Wood, Opaque, Latex, 3 Coat:

1. One coat of latex primer sealer.

2. Semi-gloss: Two coats of latex enamel.

C. Paint ME-OP-3A - Ferrous Metals, Unprimed, Alkyd, 3 Coat:

1. One coat of alkyd primer.

2. Semi-gloss: Two coats of alkyd enamel.

D. Paint ME-OP-3L - Ferrous Metals, Unprimed, Latex, 3 Coat:

1. One coat of latex primer.

2. Semi-gloss: Two coats of latex enamel.

E. Paint ME-OP-2A - Ferrous Metals, Primed, Alkyd, 2 Coat:

1. Touch-up with zinc chromate primer.

2. Semi-gloss: Two coats of alkyd enamel.

F. Paint ME-OP-2L - Ferrous Metals, Primed, Latex, 2 Coat:

1. Touch-up with zinc chromate primer.

2. Semi-gloss: Two coats of latex enamel.

G. Paint MgE-OP-3A - Galvanized Metals, Alkyd, 3 Coat:

1. One coat galvanize primer.

2. Semi-gloss: Two coats of alkyd enamel.

H. Paint MgE-OP-3L - Galvanized Metals, Latex, 3 Coat:

1. One coat galvanize primer.
2. Semi-gloss: Two coats of latex enamel.

2.04 PAINT SYSTEMS - INTERIOR (NOT INSIDE TANK)

A. Paint WI-OP-3A - Wood, Opaque, Alkyd, 3 Coat:
   1. One coat alkyd primer sealer.
   2. Semi-gloss: Two coats of alkyd enamel.

B. Paint WI-OP-3L - Wood, Opaque, Latex, 3 Coat:
   1. One coat of latex primer sealer.
   2. Semi-gloss: Two coats of latex enamel.

C. Paint CI-OP-3A - Concrete/Masonry, Opaque, Alkyd, 3 Coat:
   1. One coat of block filler.
   2. Semi-gloss: Two coats of alkyd enamel.

D. Paint CI-OP-3L - Concrete/Masonry, Opaque, Latex, 3 Coat:
   1. One coat of block filler.
   2. Semi-gloss: Two coats of latex enamel.

E. Paint MI-OP-3A - Ferrous Metals, Unprimed, Alkyd, 3 Coat:
   1. One coat of alkyd primer.
   2. Semi-gloss: Two coats of alkyd enamel.

F. Paint MI-OP-3L - Ferrous Metals, Unprimed, Latex, 3 Coat:
   1. One coat of latex primer.
   2. Semi-gloss: Two coats of latex enamel.

G. Paint MgI-OP-3A - Galvanized Metals, Alkyd, 3 Coat:
   1. One coat galvanize primer.
   2. Semi-gloss: Two coats of alkyd enamel.

H. Paint MgI-OP-3L - Galvanized Metals, Latex, 3 Coat:
   1. One coat galvanize primer.
   2. Semi-gloss: Two coats of latex enamel.

2.05 COATING SYSTEM - INSIDE WATER TANK

A. Potable Water Epoxy Coating System.
   1. Surface Preparation: SSPC-SP10/NACE 2 Near White Cleaning.
   2. 10 mil coating - Self-priming, Tnemec POTA-POX Series 20.

2.06 ACCESSORY MATERIALS

A. Accessory Materials: Linseed oil, shellac, turpentine, paint thinners and other materials not specifically indicated but required to achieve the finishes specified; commercial quality.

B. Patching Material: Latex filler.

C. Fastener Head Cover Material: Latex filler.

PART 3 EXECUTION

3.01 EXAMINATION

A. Verify that surfaces are ready to receive Work as instructed by the product manufacturer.

B. Examine surfaces scheduled to be finished prior to commencement of work. Report any condition that may potentially affect proper application.

C. Test shop-applied primer for compatibility with subsequent cover materials.

D. Measure moisture content of surfaces using an electronic moisture meter. Do not apply finishes unless moisture content of surfaces is below the following maximums:

1. Masonry, Concrete, and Concrete Unit Masonry: 12 percent.

2. Interior Wood: 15 percent, measured in accordance with ASTM D 4442.

3. Exterior Wood: 15 percent, measured in accordance with ASTM D 4442.

3.02 PREPARATION

A. Surface Appurtenances: Remove or mask electrical plates, hardware, light fixture trim, escutcheons, and fittings prior to preparing surfaces or finishing.

B. Surfaces: Correct defects and clean surfaces which affect work of this section. Remove or repair existing coatings that exhibit surface defects.

C. Marks: Seal with shellac those which may bleed through surface finishes.

D. Impervious Surfaces: Remove mildew by scrubbing with solution of tetra-sodium phosphate and bleach. Rinse with clean water and allow surface to dry.

E. Concrete and Unit Masonry Surfaces to be Painted: Remove dirt, loose mortar, scale, salt or alkali powder, and other foreign matter. Remove oil and grease with a solution of tri-sodium phosphate; rinse well and allow to dry. Remove stains caused by weathering of corroding metals with a solution of sodium metasilicate after thoroughly wetting with water. Allow to dry.

F. Galvanized Surfaces to be Painted: Remove surface contamination and oils and wash with solvent. Apply coat of etching primer.

G. Uncoated Steel and Iron Surfaces to be Painted: Remove grease, mill scale, weld splatter, dirt, and rust. Where heavy coatings of scale are evident, remove by hand wire brushing or sandblasting; clean by washing with solvent. Apply a treatment of phosphoric acid solution, ensuring weld joints, bolts, and nuts are similarly cleaned. Prime paint entire surface; spot prime after repairs.

H. Shop-Primed Steel Surfaces to be Finish Painted: Sand and scrape to remove loose primer and rust. Feather edges to make touch-up patches inconspicuous. Clean surfaces with solvent. Prime bare steel

surfaces. Re-prime entire shop-primed item.

I. Interior Wood Items to Receive Opaque Finish: Wipe off dust and grit prior to priming. Seal knots, pitch streaks, and sappy sections with sealer. Fill nail holes and cracks after primer has dried; sand between coats. Back prime concealed surfaces before installation.

J. Exterior Wood to Receive Opaque Finish: Remove dust, grit, and foreign matter. Seal knots, pitch streaks, and sappy sections. Fill nail holes with tinted exterior caulking compound after prime coat has been applied. Back prime concealed surfaces before installation.

K. Ductile Iron Pipe and Fittings inside Water Tank: Surfaces must be clean, dry and free of oil, grease, chalk and other contaminations. Prepare surface with SSPC-SP10/NACE 2 Near White Blast Cleaning with a minimum angular anchor profile of 1.5 mils.

3.03 APPLICATION

A. Apply products in accordance with manufacturer's instructions.

B. Where adjacent sealant is to be painted, do not apply finish coats until sealant is applied.

C. Do not apply finishes to surfaces that are not dry. Allow applied coats to dry before next coat is applied.

D. Apply each coat to uniform appearance. Apply each coat of paint slightly darker than preceding coat unless otherwise approved.

E. Sand wood surfaces lightly between coats to achieve required finish.

F. Vacuum clean surfaces of loose particles. Use tack cloth to remove dust and particles just prior to applying next coat.

3.04 FINISHING MECHANICAL AND ELECTRICAL EQUIPMENT

A. Refer to Section 15075 and Section 16075 for schedule of color coding of equipment, duct work, piping, and conduit.

B. Paint shop-primed equipment, where indicated.

C. Remove unfinished louvers, grilles, covers, and access panels on mechanical and electrical components and paint separately.

D. Finish equipment, piping, conduit, and exposed duct work in utility areas in colors according to the color coding scheme indicated.

E. Reinstall electrical cover plates, hardware, light fixture trim, escutcheons, and fittings removed prior to finishing.

3.05 FIELD QUALITY CONTROL

A. See Section 01400 - Quality Requirements, for general requirements for field inspection.

B. Owner will provide field inspection.

3.06 CLEANING

A. Collect waste material which may constitute a fire hazard, place in closed metal containers, and remove daily from site.

3.07 SCHEDULE - SURFACES TO BE FINISHED

A. Do Not Paint or Finish the Following Items:

1. Items fully factory-finished unless specifically noted.

2. Fire rating labels, equipment serial number and capacity labels.

B. Paint the surfaces described below under Schedule - Paint Systems.

C. Mechanical and Electrical: Use paint systems defined for the substrates to be finished.

1. Paint all exposed pipes and conduits occurring in finished areas according to colors selected by the District, unless otherwise indicated.

2. Paint shop-primed items occurring in finished areas.

D. Coat Ductile Iron Pipe and Fittings inside of water tank as described above.

3.08 SCHEDULE - PAINT SYSTEMS

A. Wood: Finish all surfaces exposed to view.

1. Exterior trim and frames: WE-OP-3A.

2. Interior trim and frames: WI-OP-3A, semi-gloss.

3. Interior timbers: WI-TR-S, satin.

B. Steel Fabrications: Finish all surfaces exposed to view.

1. Exterior: ME-OP-3A, gloss; finish all surfaces, including concealed surfaces, before installation.

2. Interior: MI-OP-3L, gloss.

C. Exposed Pipes and Conduits (Outside of Water Tank): Finish all surfaces exposed to view.

1. Exterior: ME-OP-3A, gloss; finish all surfaces, including concealed surfaces, before installation.

2. Interior: MI-OP-3L, gloss.

D. Shop-Primed Metal Items: Finish all surfaces exposed to view.

END OF SECTION

DIVISION 15

MECHANICAL

SECTION 15000

MECHANICAL SYSTEMS

PART 1 GENERAL

1.01 SECTION INCLUDES

A. Furnishing and installing mechanical systems for reinforced concrete water tank, new valve vault, and existing valve vault, as indicated on the drawings, as described in the applicable sections of this Division of the Specifications, and as directed by the District Engineer.

1.02 RELATED SECTIONS

A. Section 02315 - Structural Excavation.

B. Section 02316 - Fill and Backfill.

C. Section 02510 - Water Distribution System

D. Section 02515 - Disinfection of Water Distribution System.

E. Section 02522 - Concrete Valve Vault.

F. Section 02684 - Concrete Water Storage Tank.

G. Section 15145 - Plumbing.

1.03 REFERENCES

A. See applicable Sections.

1.04 SPECIFICATIONS

A. For purposes of clarity, the mechanical specification division is subdivided into a number of sections. This subdivision is not intended to define individual trades or limits of work which may be performed by any one trade. Therefore, each trade shall be familiar with all sections of the specifications so that the final installations will be a complete and consistent project.

1.05 SUBMITTALS

A. See Section 01300 - Administrative Requirements, for submittal procedures.

B. Product Data: Provide data on pipe materials, pipe fittings, valves, equipment and accessories. Provide manufacturers catalog information.

C. Project Record Documents: Record actual locations of mechanical equipment and appurtenant items.

1.06 REGULATORY REQUIREMENTS

A. Perform Work and install all materials in accordance with latest rules prescribed by local and/or State codes and ordinances.

B. When drawings or specifications call for sizes or grade different than required by the governing codes, the Contractor shall provide and install the larger size or higher grade.

1.07 DELIVERY, STORAGE, AND PROTECTION

A. Receive, store, and handle products, materials and equipment, at the building site, in a manner which will prevent loss, deterioration and damage. Schedule deliveries to minimize long-term storage at the project site.

B. Accept materials on site in shipping containers with labeling in place. Inspect for damage.

C. Provide temporary end caps and closures on piping and fittings. Maintain in place until installation.

E. Protect piping systems from entry of foreign materials by temporary covers, completing sections of the work, and isolating parts of completed system.

PART 2 PRODUCTS

2.01 EQUIPMENT

A. By descriptions, catalog numbers, and specific designations, standards are established for manufactured items which the Contractor shall furnish as required by the Division. Where indicated, acceptable equals may be submitted to the District Engineer for review.

B. Irrespective of which manufacturer's product is proposed to be furnished, the Contractor shall furnish too the District Engineer shop drawings and complete up-to-date engineering data sheets and catalog information for acceptance before commitments to purchase are made. The Contractor will be required to submit data for all equipment, materials and miscellaneous items as required in the General Conditions.

1. All shop drawings shall be submitted at the same time, neatly organized in a soft-back cover. Provide a Letter of Transmittal describing the equipment and materials proposed. No piece-meal submittals will be accepted.

2. Suppliers of equipment shall also provide an additional four (4) copies of submittal data which shall be turned over to the District Engineer for preparation of Operating and Maintenance Manuals.

C. Equipment Deviations.

1. Where the Contractor proposes to use an item of equipment other than that specified or detailed on the drawings which requires any redesign of the structure, partitions, foundations, piping, wiring, or any other part of mechanical, electrical, or building lay-outs; all such redesign, and all new drawings and detailing required therefore, shall be prepared by the Contractor at his own expense and acceptable to the District Engineer; at no additional expense to the Owner.

2. Where such accepted deviations require different quantities and arrangements of piping, wiring, conduit, and equipment from that specified or indicated on the drawings; the Contractor shall furnish and install any such piping, structural supports, insulation, electrical wiring and conduit, and any other additional equipment required by the revised systems; at no additional cost to the Owner.

D. Unfit or Damaged Materials. All materials or work of unsound or unfit character, or which may have become damaged during or after installation, shall be removed and reconstructed or refinished by the Contractor to the satisfaction of the District Engineer immediately upon proper notice. The expense of doing so or cost of delays and of making good the work affected by the damage shall be borne by the Contractor at fault. No extension of time will be allowed for correction of faulty work.

E. Site Inspection. Contractor and Subcontractors will be held to requirements that they examine the building site and understand the conditions under which they will be obliged to operate in performing their part of the contract. No allowance shall be made subsequently in this connection, in behalf of the Contractors, for any error through negligence on their part.

F. Openings for Work.

1. Contractor will be required to obtain and provide information for and locate all necessary openings for the work occurring in concrete foundation walls or in other areas of the buildings where openings are required.

2. Contractor shall provide and locate any necessary sleeves.

PART 3 EXECUTION

3.01 INSTALLATION

A. Install mechanical systems as described in appropriate Sections.

B. Lubrication of Equipment.

1. The Contractor shall have all pieces of mechanical and plumbing equipment properly lubricated before turning the building over to the Owner. Linen tags shall be attached to each piece of equipment showing the date of lubrication and the lubricant used.

2. Furnish the Owner with a typewritten list, in triplicate, of each item lubricated and the type of lubricant used. Provide the District Engineer with a copy of same.

C. Testing, Adjusting and Balancing.

1. All systems shall be tested as described in the appropriate Sections. Each piece of equipment and all of the systems shall be adjusted to insure proper functioning of all controls, maintenance of operations, elimination of noise and vibration, and left in first-class operating conditions.

D. Operating and Maintenance Manuals. Each Manual shall be bound in a hard-backed loose-leaf, 3-hole binder with the name of the projects and the name of the Engineer printed on the front and spine of the Manual. Provide a master index file at the beginning of the Manual showing all items included in the book of instructions. Use plastic tabs indexed for all sections of the book. Three (3) copies of the Operating and Maintenance Manual shall be provided for the project and submitted to the Engineer for his approval and then turned over to the Owner.

1. Manuals shall contain the following information on the Title Sheet:
   a. Name of Project
   b. Date Contract Awarded
   c. Date Work Commenced
   d. Date of Completion and Acceptance by Owner
   e. Name of Engineer
   f. Names of Contractors, including Subcontractors

2. Operating Instructions section of Manuals shall include the following:
   a. General description of system.
   b. Step-by-step procedure to follow in putting each piece of mechanical equipment in operation to insure correct operation of complete system.
   c. An acceptable "Major Starting Equipment" schedule to be included for each electrical motor serving various plumbing systems, including "Area Served", "Disconnect Switch Location", and "Electrical Panel Switch"

3. Maintenance Instructions section of Manuals shall include the following:
   a. Manufacturer's maintenance instructions for each piece of mechanical equipment installed in the projects. Instructions should include installation instructions, parts numbers and lists, operation instructions of equipment, name of vendor, and maintenance lubrication. Shall include a section for “Plumbing Equipment".
   b. A summary list of each piece of equipment, location, type of lubrication, and frequency of lubrication.

E. Pipe and Equipment Identification.

1. Contractor shall identify all new exposed and accessible pipe with self-adhesive labels as manufactured by Emblem Tape and Label Company, or acceptable equal, with minimum 2-inch arrows and 1 1/2-inch tape. Labels shall be applied according to instructions and recommendations by the manufacturer after the final coat of paint has been applied to piping, where painting is required.

2. Labels shall be of a proper size and lettering to suit the piping on which they are installed. Install labels at each valve and where piping passes through a wall or floor and at each hanger, 10 foot maximum.

3. Suitable direction arrows shall be installed on the piping at each piece of equipment to properly and easily identify the direction of flow in the pipe.

F. Valve Tags.

1. Tag each new valve and disconnect switch with a factory-stamped round brass tag, as manufactured by Seton Nameplate Corporation; size 1 1/2" with 3/8" high letters. Tags shall be numbered consecutively from a number provided by Owner. Each starter shall be provided with a 3" long bakelite nameplate, having the name of the equipment controlled engraved on the plate. Tags shall be securely fastened with brass chain and ring.

2. Provide a typewritten list, in duplicate, to the Owner indicating the following:
   a. Name of valve or equipment tagged.
   b. Tag number.

3. This contract will not be considered completed until all such valves are tagged and the list received by the Owner.

END OF SECTION

SECTION 15130

SEISMIC CONTROL

PART 1 GENERAL

1.01 SECTION INCLUDES

A. All labor, materials and equipment necessary to complete the seismic and vibration work for the mechanical systems for the water tank and valve box.

1. Design and installation of this work shall be based on the Seismic Zone III of the International Building Code, current edition, and other standards listed below.

2. Work shall include all mechanical isolated and non-isolated equipment and piping systems, 1 1/2" and larger.

1.02 REFERENCES

A. International Building Code (IBC).

B. NFPA Bulletin 90A.

C. UL Standard 181.

D. Tri-Services Manual, Fagel etal

E. SMACNA Guidelines for Seismic Restraints of Mechanical Systems.

F. Use the latest issue of the above reference standards at date of project.

1.03 SUBMITTALS

A. See Section 01300 - Administrative Requirements, for submittal procedures.

B. Product Data: Provide data on all materials and accessories. Provide manufacturers catalog information.

C. Project Record Documents: Record actual type and locations of all equipment.

D. Submittal data prior to fabrication shall include, but not be limited to, the following:

1. Complete engineering calculation and shop drawings for all seismic requirements for all new piping to be isolated and/or restrained.

2. The professional stamp of the Engineer who is responsible for the design and operation of the Seismic System.

3. Details for all seismic bracing with snubbers proposed for items in this specification and on the drawings.

4. Clearly outlined procedures for installing and adjusting the seismic bracing, anchors and snubbers.

5. The size, loading, and location of pipe restraints with a plan and complete description of the system.

1.04 SEISMIC REQUIREMENTS AND QUALIFICATIONS

A. The mechanical contractor shall be responsible for supplying and installing equipment, vibration isolators, flexible connections, anchors, inserts, hangers and attachments, supports, seismic snubbers and bracing to comply with IBC.

1. All supports, hangers, bases, and bracing for equipment shall be designed by a professional engineer employed by the restraint manufacturer, qualified with seismic experience in bracing for mechanical equipment.

2. Shop drawings submitted for earthquake bracing and anchors shall bear the engineer's signed professional seal.

3. The Contractor shall require all equipment suppliers to furnish equipment that meets the seismic code, with bases designed to receive seismic bracing and/or anchorage. All mechanical equipment bracing to be used in the projects shall be designed from the Equipment Shop Drawings certified correct by the equipment manufacturer for Seismic Zone III with direct anchorage capability.

4. The accepted manufacturer or supplier shall be totally responsible for the design, fabrication, installation, and operation of the Vibration and Seismic Bracing System specified herein for isolated and non-isolated equipment, piping and duct work.

1.05 REGULATORY REQUIREMENTS

A. Perform Work and install all materials in accordance with latest rules prescribed by local and/or State codes and ordinances.

B. When drawings or specifications call for sizes or grade different than required by the governing codes, the Contractor shall provide and install the larger size or higher grade.

1.07 DELIVERY, STORAGE, AND PROTECTION

A. Receive, store, and handle products, materials and equipment, at the building site, in a manner which will prevent loss, deterioration and damage. Schedule deliveries to minimize long-term storage at the project site.

B. Accept valves on site in shipping containers with labeling in place. Inspect for damage.

PART 2 PRODUCTS

2.01 SEISMIC EQUIPMENT

A. Restrain and vibration isolation equipment and systems shall be as designated by the seismic engineer, and as indicated on the shop drawings.

B. Manufacturers and Suppliers. Manufacturers and suppliers of restraint and vibration isolation equipment and systems accepted for use by the Contractor are Mason Industries, Inc., Korfund, Amber/Booth Co., Vibration Mountings and Control Co., or other acceptable equals.

PART 3 EXECUTION

3.01 EXAMINATION

A. Verify that pump station plumbing has been installed according to project drawings.

3.02 INSTALLATION

A. Install in accordance with manufacturer's written instructions and recommendations; and accepted shop drawings.

B. All mechanical piping shall be braced, snubbed, or supported to withstand seismic disturbances. Furnish all engineering, labor, materials, and equipment to provide protection against seismic disturbances as specified herein.

1. Piping. All new isolated and non-isolated piping, 1 1/2" I.D. and larger, shall be protected in all planes by restraints to accommodate thermal movement as well as restrain seismic motion. Locations shall include, but not be limited to, the following:
   a. At all drops to equipment and at flexible connections.
   b. At all 45 degree or greater changes in direction of pipe.
   c. At horizontal runs of pipe, not to exceed 30 feet O.C. spacing.
   d. Piping shall be restrained by a cable restraining system using a minimum of two 2) cables at all restraint points.
   e. Shop drawings shall be submitted with the locations of all restraints, shown on a floor plan of the building, and noting the size and type of restraint to be used.

2. Equipment Restraint. Restraints for equipment shall be as recommended by the manufacturer of the restraint systems.

END OF SECTION

SECTION 15140

VENTILATING SYSTEM

PART 1 GENERAL

1.01 SECTION INCLUDES

A. Furnishing and installing the ventilating systems, complete, in the water tank and concrete valve boxes, as described herein and as indicated on the drawings; to include exhaust fans, ventilators, duct work, and appurtenant items.

1. All items obviously necessary for complete and operating installations shall be included with the majority of the items described herein.

1.02 RELATED SECTIONS

A. Section 15130 - Seismic Control.

B. Section 15810 - Ducts.

C. Section 15834 - Axial Fans.

D. Division 16 - ELECTRICAL. All electrical work for connecting ventilating equipment.

1.03 REFERENCES

A. Applicable Air Moving and Conditioning Association (AMCA) Standards.

B. ASTM Publications:

1. A 167 - Stainless and Heat-Resisting Chromium-Nickel Steel Plate, Sheet, and Strip.

2. A 525 - Steel Sheet, Zinc-Coated (Galvanized) by the Hot-Dip Process, General Requirements.

C. American Society of Heating, Refrigeration, and Air-Conditioning Engineers (ASHRAE) Publication: Guide and Data Book, Equipment.

D. National Fire Protection Association (NFPA) Codes:

1. No. 90A - Air Conditioning and Ventilating Systems.

2. No. 91 -- Blower and Exhaust Systems.

E. Sheet Metal and Air Conditioning Contractors National Association (SMACNA) Publication: "SMACNA" Air Duct Leakage Test Manual, Current Edition.

1.04 SUBMITTALS

A. See Section 01300 - Administrative Requirements, for submittal procedures.

B. Product Data: Provide data on all ventilating equipment and accessories. Provide manufacturers catalog information; and indicate performance data and ratings.

1.05 QUALITY ASSURANCE

A. Product Conformance. Where materials and equipment are specified to conform to the requirements of the Underwriters' Laboratories, Inc. or the Air Moving and Conditioning Association, Inc., the Contractor shall submit proof of such conformance.

B. The label or listing of the specified agency will be acceptable evidence. In lieu of such label or listing, the Contractor may submit a written certificate from any nationally-recognized testing agency adequately equipped and competent to perform such services, stating that items have been tested and that the units conform to the requirements specified herein, including methods of testing of the specified agencies.

C. The system installations shall conform to the requirements of the National Fire Protection Association, Standards No. 90A, No. 91 and No. 96.

1.06 REGULATORY REQUIREMENTS

A. Perform Work in accordance with State of Utah plumbing code.

1.07 DELIVERY, STORAGE, AND PROTECTION

A. Accept equipment on site in shipping containers with labeling in place. Inspect for damage.

B. Store and handle products, materials and equipment, at the building site, in a manner which will prevent loss, deterioration and damage.

C. Store equipment and materials in clean dry places. Protect from weather, dirt, fumes, water, construction debris, and physical damage.

D. Comply with manufacturer's rigging and installation instructions for unloading equipment and materials, and for moving them to final locations.

E. Schedule deliveries to minimize long-term storage at the project site.

F. Do not install damaged equipment and materials; replace with new items.

1.08 ENVIRONMENTAL REQUIREMENTS

A. Do not install underground piping when bedding is wet or frozen.

PART 2 PRODUCTS

2.01 GENERAL

A. Capacities. Capacities of equipment and materials shall be not less than those indicated. If capacities are not shown, the capacities shall be as recommended by the manufacturers of the equipment for the intended use of the equipment.

B. Wiring Diagrams. Submit the manufacturer's electrical requirements for power supply wiring for all equipment needing electrical supply. Submit manufacturer's ladder-type wiring diagrams for inter-lock and control wiring. Clearly differentiate between portions of wiring that are factory-installed and portions to be field-installed.

C. Maintenance Data. Submit manufacturer's data and parts list for each type of equipment, control, and accessory; including "trouble-shooting" maintenance guide. Include this data and product data in maintenance manual; in accordance with requirements of these specifications.

2.02 GRAVITY TYPE ROOF VENTILATORS

A. Gravity type roof ventilators shall be of the size indicated on the drawings. The ventilators shall be designed to be installed in an opening in the roof; and for free discharge of air, as shown on the drawings. Ventilators shall be Type PR Roof Ventilators, of the sizes indicated, as manufactured by Loren Cook Company.

2.03 ROOF EXHAUST FANS

A. The roof exhaust fans shall be a roof mounted, direct drive, cast aluminum propeller exhaust ventilator with spun aluminum top caps.

B. Certification. Fans shall be manufactured at an ISO 9001 certified facility. Fans shall be listed by Underwriters Laboratories (UL 705).

C. Construction.

1. Fan shall be of bolted and welded construction utilizing corrosion resistant fasteners. The spun aluminum structural components shall be constructed of minimum 16-gauge marine alloy aluminum, bolted to a rigid aluminum support structure. The aluminum base shall have continuously welded curb cap corners for maximum leak protection.

2. The motors shall be mounted on a minimum 14-gauge steel power assembly, isolated from the unit structure with rubber vibration isolators.

3. Units shall bear an engraved aluminum nameplate and shall be shipped in ISTA Certified Transit Tested Packaging.

D. Propellers.

1. Propellers shall be cast aluminum airfoil design with cast aluminum hub.

2. The blade pitch shall be factory set and locked using set screws and roll pins.

3. The hub shall be keyed and locked to the shaft utilizing two set screws or a taper lock bushing.

4. Propellers shall be balanced in accordance with AMCA Standard 204-96, Balance Quality and Vibration Levels for Fans.

E. Motors. Motors shall be heavy duty type with permanently lubricated sealed bearings and furnished at the specified voltage, phase and enclosure.

F. Product. Fans shall be 16-inch and 12-inch fans, Model AQD, as manufactured by Loren Cook Company.

PART 3 EXECUTION

3.01 EXAMINATION

A. Verify that openings for ventilating equipment have been constructed as indicated on the drawings and as required for the equipment.

3.02 PREPARATION

A. Obtain and provide information for and locate all necessary openings for the ventilating items occurring in building walls or in other areas of the buildings where openings are required.

B. Provide and locate any necessary sleeves.

3.03 INSTALLATION

A. Project drawings indicate the extent and general arrangement of the ventilating system. The Contractor shall be responsible for installing the proposed system as indicated, without violation of applicable codes, standards, or specification requirements. Equipment arrangements submitted shall fit into the space indicated, and shall allow adequate and accepted clearances of entry, servicing and maintenance.

B. Install all equipment in accordance with shop drawings, manufacturer's written instructions and recommendations, as indicated on the drawings, and as directed by the Engineer.

C. All work shall be done in accordance with applicable portions of details of construction as indicated in SMACNA Standards, and in accordance with recognized industry practices to ensure that ventilating systems serve their intended functions.

D. Installers must examine areas and conditions under which ventilating systems and accessories are to be installed and notify the contractor in writing of conditions detrimental to proper completion of the work. Do not proceed with work until unsatisfactory conditions have been corrected in a manner acceptable to the installers and Engineer.

E. Coordination with other work shall be done as necessary to interface installation of work and accessories properly with other work.

3.04 QUALITY CONTROL

A. The completed ventilating systems shall be operated to demonstrate compliance with project requirements. Test for air leakage while systems are operating.

B. Repair or replace faulty accessories, as required, to obtain proper operation and leak proof performance.

END OF SECTION

SECTION 15145

PLUMBING SYSTEMS

PART 1 GENERAL

1.01 SECTION INCLUDES

A. Plumbing systems for concrete water tank and concrete valve vault, to include: pipe, fittings, valves, equipment, connections for piping systems, and appurtenant items.

B. Pipe supports and anchors.

C. Pipe work required to connect equipment described in other Sections; and to install and connect items furnished under this Section; as shown on the drawings and as described herein.

1.02 RELATED SECTIONS

A. Section 02315 - Excavation.

B. Section 02316 - Fill and Backfill.

C. Section 02510 - Water Distribution System.

1.03 REFERENCES

A. ASME B16.1 - Cast Iron Pipe Flanges and Flanged Fittings; The American Society of Mechanical Engineers.

B. ASME B16.3 - Malleable Iron Threaded Fittings; The American Society of Mechanical Engineers.

C. ASME B16.18 - Cast Copper Alloy Solder Joint Pressure Fittings; The American Society of Mechanical Engineers.

D. ASME B16.22 - Wrought Copper and Copper Alloy Solder Joint Pressure Fittings; The American Society of Mechanical Engineers.

E. ASME B16.26 - Cast Copper Alloy Fittings for Flared Copper Tubes; The American Society of Mechanical Engineers.

F. ASME B31.9 - Building Services Piping; The American Society of Mechanical Engineers.

G. ASTM A 53 - Standard Specification for Pipe, Steel, Black and Hot-Dipped, Zinc-Coated, Welded and Seamless.

H. ASTM B 42 - Standard Specification for Seamless Copper Pipe, Standard Sizes.

I. ASTM B 88 - Standard Specification for Seamless Copper Water Tube.

J. ASTM D 1785 - Standard Specification for Poly (Vinyl Chloride) (PVC) Plastic Pipe, Schedules 40, 80, and 120.

K. ASTM D 2447 - Standard Specification for Polyethylene (PE) Plastic Pipe, Schedules 40 and 80, Based on Outside Diameter.

L. ASTM D 2665 - Standard Specification for Poly (Vinyl Chloride) (PVC) Plastic Drain, Waste, and Vent Pipe and Fittings.

M. ASTM D 3034 - Standard Specification for Type PSM Poly (Vinyl Chloride) (PVC) Sewer Pipe and Fittings.

N. ASTM F 477 - Standard Specification for Elastomeric Seals (Gaskets) for Joining Plastic Pipe.

O. AWWA C105/A21.5 - Polyethylene Encasement for Ductile-Iron Pipe Systems; American Water Works Association.

P. AWWA C220 - Stainless-Steel Pipe, 4-in and Larger; American Water Works Association.

Q. AWWA C901 - Polyethylene (PE) Pressure Pipe and Tubing, 1/2 In. Through 3 In., for Water Service; American Water Works Association; (ANSI/AWWA C901).

R. MSS SP-58 - Pipe Hangers and Supports - Materials, Design and Manufacture; Manufacturers Standardization Society of the Valve and Fittings Industry, Inc.

S. MSS SP-80 - Bronze Gate, Globe, Angle and Check Valves; Manufacturers Standardization Society of the Valve and Fittings Industry, Inc.

T. MSS SP-89 - Pipe Hangers and Supports - Fabrication and Installation Practices; Manufacturers Standardization Society of the Valve and Fittings Industry, Inc.

U. Use the latest edition of the above reference standards as of the date of the project.

1.04 SUBMITTALS

A. See Section 01300 - Administrative Requirements, for submittal procedures.

B. Product Data: Provide data on pipe materials, pipe fittings, valves, and accessories. Provide manufacturers catalog information. Indicate valve data and ratings.

C. Project Record Documents: Record actual locations of valves.

D. NSL CERTIFICATION. All plumbing components shall have NSF 61 certification.

1.05 QUALITY ASSURANCE

A. Perform Work in accordance with State of Utah, standards.

1. Maintain one copy on project site.

B. Valves: Manufacturer's name and pressure rating marked on valve body.

C. Identify pipe with marking including size, ASTM material classification, ASTM specification, potable water certification, water pressure rating.

1.06 REGULATORY REQUIREMENTS

A. Plumbing Code Compliance. Comply with applicable portions of the latest Utah Plumbing Code and local codes pertaining to plumbing materials, construction, and installation of products.

B. ANSI Compliance. Comply with applicable American National Standards pertaining to products and installation of domestic water piping systems.

1.07 DELIVERY, STORAGE, AND PROTECTION

A. Receive, store, and handle products, materials and equipment, at the building site, in a manner which will prevent loss, deterioration and damage.

B. Accept valves and plumbing equipment on site in shipping containers with labeling in place. Inspect for damage.

C. Provide temporary protective coating on cast iron and steel valves.

D. Handle pipe and tubing carefully to prevent bending and end damage; and also, to avoid cracking and scoring finish.
E. Provide temporary end caps and closures on piping, fittings and equipment. Maintain in place until installation.

F. Provide end-cap thread protectors on exposed threads of threaded metal pipe.

G. Protect piping systems from entry of foreign materials by temporary covers, completing sections of the work, and isolating parts of completed system.

H. Schedule deliveries to minimize long-term storage at the project site.

I. Store pipe and tubing inside and protect from the weather. When necessary to store outdoors, elevate above grade and enclose with durable, watertight wrapping.

J. Deliver and store water piping products and equipment in factory-wrapped packages which properly protect products against weather, dirt and damage.

1.08 ENVIRONMENTAL REQUIREMENTS

A. Do not install underground piping when bedding is wet or frozen.

PART 2 PRODUCTS

2.01 STORM DRAIN PIPING

A. Reinforced Concrete Pipe: ASTM C 76, class III with wall type B; mesh reinforcement; inside nominal diameter as indicated; bell and spigot end joints.

B. PVC Pipe: ASTM D 3034 SDR 35.

1. Fittings: PVC.

2. Joints: Push-on, using ASTM F 477 elastomeric gaskets.

2.02 WATER PIPING

A. Ductile Iron Pipe and Fittings shall be of the size and class indicated on the drawings; and shall conform to the requirements of Section 02510.

B. Stainless-Steel Pipe and Fittings, type 316, shall be of the sizes indicated on the drawings and as directed by the District Engineer; and conform to the requirements of Sections 02510 and 02684.

C. Exposed pipe and fittings shall not be coated with coal tar pitch varnish; but shall be painted as specified in Section 09900.

D. Copper Tube: ASTM B 88, Type K.

1. Fittings: ASME B16.18, cast copper alloy or ASME B16.22, wrought copper and bronze.

2. Joints: ASTM B 32, alloy Sn95 solder.

E. Galvanized Steel Pipe: ASTM A120, Schedule 80, seamless or welded, with screwed ends.

1. Fittings shall be 150 lb. galvanized malleable iron banded type, with screwed ends.

2. Unions shall be galvanized railroad type with ground brass-to-iron seats.

2.03 PIPE SLEEVE SEALS

A. Where piping penetrates outside walls, provide modular wall and casing link-type seals around pipe to make periphery of the penetration air and watertight. The seals shall be equal to the Thunderline Corporation "Link Seal".

2.04 PIPE HANGERS AND SUPPORTS

A. General. Provide all hangers, supports, clamps, guides, sleeves, inserts, anchors and other such devices required for hanging or supporting pipe, preserving alignment, prevention or control of movement, passage of pipe through walls and floors, or securing pipe in any manner. The required number, location and detail of such items may or may not be indicated on the drawings; but, in any case, such work shall be provided as work incidental to furnishing and installing any type of pipe, fittings and appurtenances, and no extra payment will be made for this work.

B. All piping shall be adequately supported or suspended in such manner as to prevent sagging, swaying, pocketing, displacement, and over-stressing of pipe, fittings or connections; and shall furthermore be installed and supported so that no pipe, fittings, valves or "specials" transfer load or strain to equipment of any kind.

C. Unless otherwise specified or indicated on the drawings or accepted data submittals, hangers and supports shall conform to requirements herein.

D. Plumbing Piping:

1. Conform to ASME B31.9.

2. Hangers for Pipe Sizes 1/2 Inch to 1-1/2 Inches: Malleable iron, adjustable swivel, split ring.

3. Hangers for Cold Pipe Sizes 2 Inches and Over: Carbon steel, adjustable, clevis.

4. Wall Support for Pipe Sizes to 3 Inches: Cast iron hook.

5. Vertical Support: Steel riser clamp.

6. Floor Support for Cold Pipe: Cast iron adjustable pipe saddle, lock nut, nipple, floor flange, and concrete pier or steel support.

7. Floor Support for Hot Pipe Sizes to 4 Inches: Cast iron adjustable pipe saddle, locknut, nipple, floor flange, and concrete pier or steel support.

8. Copper Pipe Support: Carbon steel ring, adjustable, copper plated.

9. Concrete supports shall be installed under tees, bends and valves wherever shown on the drawings. Concrete supports shall be neatly constructed and finished. No supports shall be made until all pipe is in its final position.

10. Concrete thrust blocks shall be used wherever shown on the drawings or where thrust is great enough, in the Engineer's opinion, to cause movement of the piping. Adjustable pipe supports may be used as kick blocks for pipe in open locations.

2.05 GATE VALVES

A. Up to and Including 3 Inches:

1. Manufacturers:
   a. Powell.
   b. Substitutions: See Section 01600.

2. MSS SP-80, Class 125, bronze body, bronze trim, rising stem, handwheel, inside screw, solid wedge disc, solder ends.

B. 4 inch and above: conforming to requirements of Section 02510, with flanged or screwed ends as indicated on the drawings; and shall have handwheels and position indicators.

2.06 BUTTERFLY VALVES

A. Butterfly valves shall conform to requirements of Section 02510, with flanged ends as indicated on the drawings.

B. Manual Operators. Manual operators shall consist of totally enclosed worm gearing, with stops provided to prevent over-travel of valve disc. Operators shall provide sufficient torque capacity to seat, unseat and rigidly hold, in any intermediate position, the valve disc under operating conditions of valve. Operator shall have indicator assembly to indicate position of valve disc. Worm gears shall be bronze and worms shall be hardened steel, which operate in lubricated bath. Operators shall be located to provide easy access, shall have a handwheel with square operating nut, and shall be slow-closing.

2.07 COMBINATION AIR-VACUUM RELEASE VALVES

A. Valves shall be designed to release large quantities of air from the pipeline during time of filling, admit large quantities of air into the pipeline during time of draining, and release small accumulations of air during normal operation of the pipeline.

B. Valves shall be equal in quality to "Heavy-Duty Combination Air Release Valves", of the size indicated on the drawings and as manufactured by Valve and Primer Corp. (APCO); and shall meet the provisions of these specifications.

2.08 MISCELLANEOUS ITEMS

A. Flanged Coupling Adapters. The flanged coupling adapters shall be Rockwell Type 912 or Type 913, or acceptable equal, with anchor studs as recommended by the manufacturer; for connecting ductile iron pipe to the flanged valves, equipment and fittings.

B. Mechanical Couplings. The mechanical couplings shall be Dresser, Rockwell, or acceptable equal, for connecting the size and type of pipe shown on the drawings. Couplings exposed to soil shall be primed and coated with a 1/4-inch layer of coal tar or approved rust preventing wax compound.

C. Other Items. Other miscellaneous and appurtenant materials shall be furnished as required to complete each item of work.

PART 3 EXECUTION

3.01 EXAMINATION

A. Verify that excavations are to required grade, dry, and not over-excavated.

B. Verify that concrete structures are as indicated on the drawings.

3.02 PREPARATION

A. Ream pipe and tube ends. Remove burrs. Bevel plain end ferrous pipe.

B. Remove scale and dirt, on inside and outside, before assembly.

C. Prepare piping connections to equipment with flanges, unions or couplings.

3.03 INSTALLATION

A. Install all pipe, valves, fittings and accessories as indicated on the drawings; in conformity with State and local plumbing codes and industry standards.

B. Install equipment as indicated on the drawings; in accordance with manufacturer's instructions.

C. Pipe shall be cut accurately to measurements taken at the job site and shall be worked into place without springing or forcing; properly clearing all doors and other openings. Excessive cutting or other weakening of the concrete structures to facilitate piping installation will not be permitted.

D. Provide non-conducting dielectric connections wherever jointing dissimilar metals.

E. Install piping to allow for expansion and contraction without stressing pipe, joints, or connected equipment.

F. Establish elevations of buried piping outside the building to ensure not less than 4 ft of cover of water lines.

G. Prepare exposed, unfinished pipe, fittings, supports, and accessories ready for finish painting. Refer to Section 09900.

H. Excavate in accordance with Sections 02312 and 02315 for work of this Section.

I. Install bell and spigot pipe with bell end upstream.

J. Install valves with stems upright or horizontal, not inverted.

K. Install water piping to ASME B31.9.

L. Sleeve pipes passing through partitions, walls and floors.

M. Inserts:

1. Provide inserts for placement in concrete formwork.

N. Pipe Hangers and Supports:

1. Install in accordance with ASME B31.9.

2. Support horizontal piping as indicated and according to manufacturer’s recommendations.

3. Install hangers to provide minimum 1/2-inch space between finished covering and adjacent work.

4. Place hangers within 12 inches of each horizontal elbow.

5. Use hangers with 1-1/2-inch minimum vertical adjustment. Design hangers for pipe movement without disengagement of supported pipe.

6. Provide copper plated hangers and supports for copper piping.

7. Prime coat exposed steel hangers and supports. Refer to Section 09900.

8. Support cast iron drainage piping at every joint.

3.04 APPLICATION

A. Install couplings or unions downstream of valves and at equipment or apparatus connections.

B. Install brass male adapters each side of valves in copper piped system. Solder adapters to pipe.

C. Install gate valves for shut-off and to isolate equipment, part of systems, or vertical risers.

3.05 ERECTION TOLERANCES

A. Drainage Piping: Establish invert elevations within 1/2 inch vertically of location indicated and slope to drain at minimum of 1/4 inch per foot slope.

B. Water Piping: Slope at minimum of 1/32 inch per foot and arrange to drain at low points.

3.06 PAINTING

A. After installation of plumbing, all exposed piping shall be cleaned of dirt and grease and painted as specified in Section 09900.

3.07 PIPE SLEEVES

A. Pipes passing through concrete construction shall be fitted with sleeves. Each sleeve shall extend through the wall, and shall be cut flush with each surface, unless otherwise required. Sleeves shall be two pipes sizes larger in diameter than the passing pipe. Sleeves in bearing walls shall be made of steel pipe.

B. Sleeves in floors shall be steel; space between such floor sleeves and passing pipes shall be caulked with an acceptable graphite packing and a plastic and waterproof caulking compound; and floor sleeves shall extend one-inch above finished floors.

C. All sleeves shall be securely cemented in place.

3.08 TESTING

A. After the installation of the plumbing system is completed and at such time as the Engineer may direct, the Contractor shall conduct an operating test for acceptance of the work. The tests shall be performed in the presence of the Engineer, as specified in Section 02510.

END OF SECTION

SECTION 15810

DUCTS

PART 1 GENERAL

1.01 SECTION INCLUDES

A. Metal ductwork.

B. Buried ductwork.

C. Duct cleaning.

1.02 RELATED SECTIONS

A. Section 09900 - Paints and Coatings: Weld priming, weather resistant, paint or coating.

1.03 REFERENCES

A. ASTM A 36 - Standard Specification for Carbon Structural Steel.

B. ASTM A 366 - Standard Specification for Steel, Sheet, Carbon, Cold Rolled, Commercial Quality.

C. ASTM A 569 - Standard Specification for Commercial Steel, Sheet and Strip, Carbon (0.15 Maximum Percent), Hot-Rolled.

D. ASTM A 653 - Standard Specification for Steel Sheets, Zinc-Coated (Galvanized) or Zinc-Iron Alloy-Coated (Galvannealed) by the Hot Dip Process.

E. NFPA 90A - Standard for the Installation of Air Conditioning and Ventilating Systems; National Fire Protection Association.

F. NFPA 90B - Standard for the Installation of Warm Air Heating and Air Conditioning Systems; National Fire Protection Association.

G. NFPA 96 - Standard for Ventilation Control and Fire Protection of Commercial Cooking Operations; National Fire Protection Association.

H. SMACNA (LEAK) - HVAC Air Duct Leakage Test Manual; Sheet Metal and Air Conditioning Contractors' National Association.

I. SMACNA (DCS) - HVAC Duct Construction Standards - Metal and Flexible; Sheet Metal and Air Conditioning Contractors' National Association.

J. UL 181 - Standard for Factory-Made Air Ducts and Air Connectors; Underwriters Laboratories Inc.

K. Use the latest edition of the above reference standards as of the date of the project.

1.04 PERFORMANCE REQUIREMENTS

A. No variation of duct configuration or sizes permitted except by written permission. Size round ducts installed in place of rectangular ducts in accordance with ASHRAE table of equivalent rectangular and round ducts.

1.05 SUBMITTALS

A. See Section 01300 - Administrative Requirements, for submittal procedures.

B. Product Data: Provide data for duct materials.

C. Shop Drawings: Indicate duct fittings, particulars such as gages, sizes, welds, and configuration prior to start of work.

D. Test Reports: Indicate pressure tests performed. Include date, section tested, test pressure, and leakage rate, following SMACNA (LEAK) - HVAC Air Duct Leakage Test Manual.

E. Manufacturer's Installation Instructions: Indicate special procedures for glass fiber ducts.

F. Manufacturer's Certificate: Certify that installation of glass fiber ductwork meets or exceed specified requirements.

G. Project Record Documents: Record actual locations of ducts and duct fittings. Record changes in fitting location and type. Show additional fittings used.

1.06 QUALITY ASSURANCE

A. Manufacturer Qualifications: Company specializing in manufacturing the type of products specified in this section, with minimum three years of documented experience.

B. Installer Qualifications: Company specializing in performing the type of work specified in this section, with minimum five years of documented experience.

1.07 REGULATORY REQUIREMENTS

A. Construct ductwork to NFPA 90A standards.

1.08 ENVIRONMENTAL REQUIREMENTS

A. Do not install duct sealants when temperatures are less than those recommended by sealant manufacturers.

B. Maintain temperatures within acceptable range during and after installation of duct sealants.

PART 2 PRODUCTS

2.01 MATERIALS

A. Galvanized Steel Ducts: ASTM A 653/A 653M galvanized steel sheet, Forming Steel (FS) designation, with G60/Z180 zinc coating.

2.02 DUCTWORK FABRICATION

A. Fabricate and support in accordance with SMACNA HVAC Duct Construction Standards - Metal and Flexible, and as indicated. Provide duct material, gages, reinforcing, and sealing for operating pressures indicated.

B. Construct T's, bends, and elbows with radius of not less than 1-1/2 times width of duct on centerline. Where not possible and where rectangular elbows must be used, provide air foil turning vanes. Where acoustical lining is indicated, provide turning vanes of perforated metal with glass fiber insulation.

C. Increase duct sizes gradually, not exceeding 15 degrees divergence wherever possible; maximum 30 degrees divergence upstream of equipment and 45 degrees convergence downstream.

D. Fabricate continuously welded round and oval duct fittings two gages heavier than duct gages indicated in SMACNA Standard. Joints shall be minimum 4-inch cemented slip joint, brazed or electric welded. Prime coat welded joints.

E. Provide standard 45-degree lateral wye takeoffs unless otherwise indicated where 90-degree conical tee connections may be used.

F. Where ducts are connected to exterior wall louvers and duct outlet is smaller than louver frame, provide blank-out panels sealing louver area around duct. Use same material as duct, painted black on exterior side; seal to louver frame and duct.

2.03 MANUFACTURED METAL DUCTWORK AND FITTINGS

A. Manufacture in accordance with SMACNA HVAC Duct Construction Standards - Metal and Flexible, and as indicated. Provide duct material, gauges, reinforcing, and sealing for operating pressures indicated.

2.04 BURIED UNDERGROUND DUCTS

A. Buried ducts may be concrete encased sheet metal as indicated.

B. Fabricate metal ductwork in accordance with SMACNA HVAC Duct Construction Standards - Metal and Flexible, except as indicated. Fabricate using two gages heavier material than indicated for 2-inch WG pressure class.

PART 3 EXECUTION

3.01 INSTALLATION

A. Install in accordance with manufacturer's instructions.

B. Duct sizes indicated are inside clear dimensions. For lined ducts, maintain sizes inside lining.

C. Install and seal metal and flexible ducts in accordance with SMACNA HVAC Duct Construction Standards - Metal and Flexible.

D. Locate ducts with sufficient space around equipment to allow normal operating and maintenance activities.

E. Use crimp joints with or without bead for joining round duct sizes 8 inch and smaller with crimp in direction of air flow.

F. Use double nuts and lock washers on threaded rod supports.

G. Slope underground ducts to plenums or low pump out points at l:500. Provide access doors for inspection.

H. Paint buried metal ductwork without factory jacket with one coat and seams and joints with additional coat of asphalt base protective coating.

I. Encase buried metal ductwork in 3 inch minimum of concrete. Provide adequate tie-down points to prevent ducts from floating during concrete placement. Introduce no heat into ducts for 20 days following placement of concrete.

J. Tape joints of PVC coated metal ductwork with PVC tape.

K. Insulate buried supply duct runs over 70 feet long with 1-inch-thick insulation covered with plastic vapor barrier. Refer to Section 15086.

L. Connect terminal units to supply ducts directly or with one-foot maximum length of flexible duct. Do not use flexible duct to change direction.

M. Connect diffusers or light troffer boots to low pressure ducts directly or with 5 feet maximum length of flexible duct held in place with strap or clamp.

N. Connect flexible ducts to metal ducts with adhesive.

O. Set plenum doors 6 to 12 inches above floor. Arrange door swings so that fan static pressure holds door in closed position.

P. During construction provide temporary closures of metal or taped polyethylene on open ductwork to prevent construction dust from entering ductwork system.

Q. At exterior wall louvers, seal duct to louver frame and install blank-out panels.

3.02 CLEANING

A. Clean duct system and force air at high velocity through duct to remove accumulated dust. To obtain sufficient air, clean half the system at a time. Protect equipment which may be harmed by excessive dirt with temporary filters, or bypass during cleaning.

END OF SECTION

SECTION 15834

AXIAL FANS

PART 1 GENERAL

1.01 SECTION INCLUDES

A. Propeller fans.

B. Motors and drives.

C. Accessories.

1.02 RELATED SECTIONS

A. Section 16140 - Ventilating System: roof mounted exhaust fan.

B. Section 16155 - Equipment Wiring: Electrical characteristics and wiring connections.

1.03 REFERENCES

A. ABMA STD 9 - Load Ratings and Fatigue Life for Ball Bearings; American Bearing Manufacturers Association, Inc.

B. ABMA STD 11 - Load Ratings and Fatigue Life for Roller Bearings; American Bearing Manufacturers Association, Inc.

C. AMCA 99 - Standards Handbook; Air Movement and Control Association International, Inc.

D. AMCA 210 - Laboratory Methods of Testing Fans for Ratings; Air Movement and Control Association International, Inc.

E. AMCA 301 - Methods for Calculating Fan Sound Ratings from Laboratory Test Data; Air Movement and Control Association International, Inc.

F. NEMA MG 1 - Motors and Generators; National Electrical Manufacturers Association.

G. Use the latest edition of the above reference standards as of the date of the project.

1.04 SUBMITTALS

A. See Section 01300 - Administrative Requirements, for submittal procedures.

B. Product Data: Provide data on axial fans and accessories including fan curves with specified operating point clearly plotted, power, RPM, sound power levels for both fan inlet and outlet at rated capacity, and electrical characteristics and connection requirements. Fans shall bear the AMCA seal

C. Shop Drawings: Indicate assembly of axial fans and accessories including fan curves with specified operating point clearly plotted, sound power levels for both fan inlet and outlet at rated capacity, and electrical characteristics and connection requirements.

D. Test Reports: Indicate performance data for adjustable axial fan blades for at least five blade settings, including maximum.

E. Manufacturer's Instructions: Indicate installation instructions.

F. Maintenance Data: Include instructions for lubrication, motor and drive replacement, spare parts list, and wiring diagrams.

1.05 QUALITY ASSURANCE

A. Manufacturer Qualifications: Company specializing in manufacturing the type of products specified in this section, with minimum three years of documented experience.

B. Products Requiring Electrical Connection: Listed and classified by Underwriters Laboratories Inc. as suitable for the purpose specified and indicated.

1.06 DELIVERY, STORAGE, AND PROTECTION

A. Protect motors, shafts, and bearings from weather and construction dust.

1.07 ENVIRONMENTAL REQUIREMENTS

A. Do not operate fans for any purpose until ductwork is clean, filters are in place, bearings have been lubricated, and fan has been tested run under observation.

PART 2 PRODUCTS

2.01 PROPELLER FANS

A. Fans to be roof mounted exhaust fans, as indicated on the drawings. See Section 15140 for details.

PART 3 EXECUTION

3.01 INSTALLATION

A. Install in accordance with shop drawings, manufacturer's written instructions and recommendations, and as directed by the Engineer.

B. Install in accordance with applicable portions of details of construction as indicated in SMACNA Standards, and in accordance with recognized industry practices to ensure that ventilating systems serve their intended functions.

C. Installers must examine areas and conditions under which fans and accessories are to be installed and notify the contractor in writing of conditions detrimental to proper completion of the work. Do not proceed with work until unsatisfactory conditions have been corrected in a manner acceptable to the installers and the District Engineer.

G. Coordination with other work shall be done as necessary to interface installation of work and accessories properly with other work.

3.02 QUALITY CONTROL

A. Fans shall be operated to demonstrate compliance with project requirements. Test for air leakage while systems are operating.

B. Repair or replace faulty equipment and accessories, as required, to obtain proper operation and leak-proof performance.

END OF SECTION

DIVISION 16

ELECTRICAL

SECTION 16000

ELECTRICAL SYSTEMS

PART 1 GENERAL

1.01 SECTION INCLUDES

A. Furnishing and installing complete electrical systems for the water tank project, as indicated on the drawings and as described in the applicable sections of this Division of the Specifications.

1.02 RELATED SECTIONS

A. Section 02522 - Reinforced Concrete Valve Box Structure.

1.03 REFERENCES

A. See applicable Sections.

1.04 SPECIFICATIONS

A. For purposes of clarity, the electrical specification division is subdivided into a number of sections. This subdivision is not intended to define individual trades or limits of work which may be performed by any one trade. Therefore, each trade shall be familiar with all sections of the specifications so that the final installations will be a complete and consistent project.

1.05 SUBMITTALS

A. See Section 01300 - Administrative Requirements, for submittal procedures.

B. Product Data: Provide data on electrical materials, equipment and accessories. Provide manufacturers catalog information.

C. Project Record Documents: Record actual locations of electrical equipment and appurtenant items.

1.06 REGULATORY REQUIREMENTS

A. Perform Work and install all materials in accordance with latest rules prescribed by local and/or State codes and ordinances.

B. When drawings or specifications call for sizes or grade different than required by the governing codes, the Contractor shall provide and install the larger size or higher grade.

1.07 DELIVERY, STORAGE, AND PROTECTION

A. Receive, store, and handle products, materials and equipment, at the building site, in a manner which will prevent loss, deterioration and damage. Schedule deliveries to minimize long-term storage at the project site.

B. Accept materials on site in shipping containers with labeling in place. Inspect for damage.

PART 2 PRODUCTS

2.01 EQUIPMENT

A. By descriptions, catalog numbers, and specific designations, standards are established for manufactured items which the Contractor shall furnish as required by this appropriate Division. Acceptable equals may be submitted to the District Engineer for review.

B. Irrespective of which manufacturer's product is proposed to be furnished, the Contractor shall furnish too the District Engineer shop drawings and complete up-to-date engineering data sheets and catalog information for acceptance before commitments to purchase are made. The Contractor will be required to submit data for all equipment, materials and miscellaneous items as required in the General Conditions.

1. All shop drawings shall be submitted at the same time, neatly organized in a soft-back cover. Provide a Letter of Transmittal describing the equipment and materials proposed. No piece-meal submittals will be accepted.

2. Suppliers of equipment shall also provide an additional four (4) copies of submittal data which shall be turned over to the Engineer for preparation of Operating and Maintenance Manuals.

C. Equipment Deviations.

1. Where the Contractor proposes to use an item of equipment other than that specified or detailed on the drawings which require any redesign of the structure, foundations, piping, wiring, or any other part of mechanical, electrical, or building lay-outs; all such redesign, and all new drawings and detailing required therefore, shall be prepared by the Contractor at his own expense and acceptable to the District Engineer; at no additional expense to the Owner.

2. Where such accepted deviations require different quantities and arrangements of wiring, conduit, and equipment from that specified or indicated on the drawings; the Contractor shall furnish and install any such piping, structural supports, controllers, motors, starters, electrical wiring and conduit, and any other additional equipment required by the revised systems; at no additional cost to the Owner.

D. Unfit or Damaged Materials. All materials or work of unsound or unfit character, or which may have become damaged during or after installation, shall be removed and reconstructed or refinished by the Contractor to the satisfaction of the Engineer immediately upon proper notice. The expense of doing so or cost of delays and of making good the work affected by the damage shall be borne by the Contractor at fault. No extension of time will be allowed for correction of faulty work.

E. Site Inspection. Contractor and Subcontractors will be held to requirements that they examine the building site and understand the conditions under which they will be obliged to operate in performing their part of the contract. No allowance shall be made subsequently in this connection, in behalf of the Contractors, for any error through negligence on their part.

F. Openings for Work.

1. Contractor will be required to obtain and provide information for and locate all necessary openings for the work occurring in concrete foundation walls or in other areas of the buildings where openings are required.

2. Contractor shall provide and locate any necessary sleeves.

PART 3 EXECUTION

3.01 INSTALLATION

A. Install electrical systems as described herein and in appropriate Sections of these specifications.

B. Furnish and install all conduit from the various items of electrical equipment to the lighting panel, as indicated on the drawings and as required to complete the electrical system.

C. Furnish and install all electrical wires and cables from the various items of electrical equipment to the lighting panel, as indicated on the drawings as required to complete the electrical system.

D. Furnish and install the lighting panel, as indicated on the drawings.

1. Furnish and install conduit and wire for a power supply line, from the supply transformer to the lighting panel, as indicated and as directed.

2. Furnish and install all conduit from the various electrical devices to the lighting panel, as indicated on the drawings and as required to complete the electrical system.

3. Furnish and install all electrical wires and cables from the various electrical devices to the lighting panel, as indicated on the drawings as required to complete the electrical system.

E. Testing, Adjusting and Balancing.

1. All systems shall be tested as described in the appropriate Sections. Each piece of equipment and all of the systems shall be adjusted to insure proper functioning of all controls, maintenance of operations, elimination of noise and vibration, and left in first-class operating conditions.

F. Operating and Maintenance Manuals. Each Manual shall be bound in a hard-backed loose-leaf, 3-hole binder with the name of the projects and the name of the Engineer printed on the front and spine of the Manual. Provide a master index file at the beginning of the Manual showing all items included in the book of instructions. Use plastic tabs indexed for all sections of the book. Three (3) copies of the Operating and Maintenance Manual shall be provided for the project and submitted to the Engineer for his approval and then turned over to the Owner.

1. Manuals shall contain the following information on the Title Sheet:
   a. Name of Project
   b. Date Contract Awarded
   c. Date Work Commenced
   d. Date of Completion and Acceptance by Owner
   e. Name of Engineer
   f. Names of Contractors, including Subcontractors

2. Operating Instructions section of Manuals shall include the following:
   a. General description of system.
   b. Step-by-step procedure to follow in putting each piece of mechanical equipment in operation to insure correct operation of complete system.
   c. An acceptable "Major Starting Equipment" schedule to be included for each electrical motor serving ventilating and plumbing systems, including "Area Served", "Disconnect Switch Location", and "Electrical Panel Switch"

3. Maintenance Instructions section of Manuals shall include the following:
   a. Manufacturer's maintenance instructions for each piece of mechanical equipment installed in the projects. Instructions should include installation instructions, parts numbers and lists, operation instructions of equipment, name of vendor, and maintenance lubrication. Shall include a section for "Plumbing Equipment".
   b. A summary list of each piece of equipment, location, type of lubrication, and frequency of lubrication.

END OF SECTION

SECTION 16060

GROUNDING AND BONDING

PART 1 GENERAL

1.01 SECTION INCLUDES

A. Grounding electrodes and conductors, equipment grounding conductors, and bonding to complete grounding system consisting of:

1. Existing metal underground water pipe.
2. Metal frame of the building.
3. Concrete-encased electrode.
4. Rod electrodes.
5. Plate electrodes.
6. Active electrodes.

1.02 REFERENCES

A. NETA STD ATS - Acceptance Testing Specifications for Electrical Power Distribution Equipment and Systems; International Electrical Testing Association; latest edition.

B. NFPA 70 - National Electrical Code; National Fire Protection Association.

1.03 PERFORMANCE REQUIREMENTS

A. Grounding System Resistance: 5 ohms.

1.04 SUBMITTALS

A. See Section 01300 - Administrative Requirements for submittals procedures.

B. Product Data: Provide for grounding electrodes and connections.

C. Test Reports: Indicate overall resistance to ground and resistance of each electrode.

D. Manufacturer's Instructions: Indicate application conditions and limitations of use stipulated by product testing agency specified under Quality Assurance. Include instructions for storage, handling, protection, examination, preparation, and installation of product.

E. Project Record Documents: Record actual locations of components and grounding electrodes.

F. Certificate of Compliance: Indicate approval of installation by authority having jurisdiction.

1.05 QUALITY ASSURANCE

A. Conform to requirements of NFPA 70.

B. Manufacturer Qualifications: Company specializing in manufacturing the products specified in this section with minimum three years documented experience with service facilities within 100 miles of Project.

C. Products: Listed and classified by Underwriters Laboratories, Inc. as suitable for the purpose specified and indicated.

PART 2 PRODUCTS

2.01 ELECTRODES

A. Rod Electrodes: Copper.

1. Diameter: size to conform to NFPA 70 requirements.

2. Length: length to conform to NFPA 70 requirements.

B. Active Electrodes: Metallic-salt-filled copper-tube electrode.

1. Shape: Straight.

2. Length: 8 feet.

3. Connector: U-bolt pressure plate.

C. Foundation Electrodes: 2/0 AWG.

2.02 CONNECTORS AND ACCESSORIES

A. Mechanical Connectors: Bronze.

B. Wire: Stranded copper.

C. Grounding Electrode Conductor: Size to meet NFPA 70 requirements.

PART 3 EXECUTION

3.01 EXAMINATION

A. Verify existing conditions prior to beginning work.

B. Verify that final backfill and compaction has been completed before driving rod electrodes.

3.02 INSTALLATION

A. Install ground electrodes at locations indicated. Install additional rod electrodes as required to achieve specified resistance to ground.

B. Install 4 AWG bare copper wire in foundation footing where indicated.

C. Provide grounding electrode conductor and connect to reinforcing steel in foundation footing where indicated. Bond steel together.

D. Provide bonding to meet requirements described in Quality Assurance.

E. Bond together reinforcing steel and metal accessories in pool and fountain structures; in accordance with NFPA 70.

F. Install transient suppression plate where indicated.

G. Install ground grid under access floors where indicated. Construct grid of 2 AWG bare copper wire installed on 24-inch centers both ways. Bond each access floor pedestal to grid.

H. Bond together each metallic raceway, pipe, duct and other metal object entering space under access floors. Bond to underfloor ground grid. Use 2 AWG bare copper conductor.

I. Equipment Grounding Conductor: Provide separate, insulated conductor within each feeder and branch circuit raceway. Terminate each end on suitable lug, bus, or bushing.

J. Interface with lightning protection system installed under Section 13100.

3.03 FIELD QUALITY CONTROL

A. Owner will provide field inspection in accordance with Section 01400.

B. Inspect and test in accordance with NETA STD ATS except Section 4.

C. Perform inspections and tests listed in NETA STD ATS, Section 7.13.

END OF SECTION

SECTION 16070

HANGERS AND SUPPORTS

PART 1 GENERAL

1.01 SECTION INCLUDES

A. Conduit and equipment supports.

B. Anchors and fasteners.

1.02 REFERENCES

A. NECA (INST) - NECA Standard of Installation; National Electrical Contractors Association; latest edition.

B. NFPA 70 - National Electrical Code; National Fire Protection Association.

1.03 SUBMITTALS

A. See Section 01300 - Administrative Requirements, for submittal procedures.

B. Product Data: Provide manufacturer’s catalog data for fastening systems.

C. Manufacturer's Instructions: Indicate application conditions and limitations of use stipulated by product testing agency. Include instructions for storage, handling, protection, examination, preparation, and installation of product.

1.04 QUALITY ASSURANCE

A. Conform to requirements of NFPA 70.

B. Products: Listed and classified by Underwriters Laboratories, Inc. as suitable for the purpose specified and indicated.

PART 2 PRODUCTS

2.01 MATERIALS

A. Hangers, Supports, Anchors, and Fasteners - General: Corrosion-resistant materials of size and type adequate to carry the loads of equipment and conduit, including weight of wire in conduit.

B. Supports: Fabricated of structural steel or formed steel members; galvanized.

C. Anchors and Fasteners:

1. Concrete Structural Elements: Use precast inserts, expansion anchors, powder-actuated anchors, or preset inserts.

2. Steel Structural Elements: Use beam clamps, steel ramset fasteners, or welded fasteners.

3. Concrete Surfaces: Use self-drilling anchors or expansion anchors.

4. Hollow Masonry, Plaster, and Gypsum Board Partitions: Use toggle bolts or hollow wall fasteners.

5. Sheet Metal: Use sheet metal screws.

6. Wood Elements: Use wood screws.

PART 3 EXECUTION

3.01 INSTALLATION

A. Locate and install anchors, fasteners, and supports in accordance with NECA "Standard of Installation".

1. Do not fasten supports to pipes, ducts, mechanical equipment, or conduit.

2. Obtain permission from District Engineer before drilling or cutting structural members.

B. Rigidly weld support members or use hexagon-head bolts to present neat appearance with adequate strength and rigidity. Use spring lock washers under all nuts.

C. Install surface-mounted cabinets and panelboards with minimum of four anchors.

D. In wet and damp locations use steel channel supports to stand cabinets and panelboards 1 inch off wall.

E. Use sheet metal channel to bridge studs above and below cabinets and panelboards recessed in hollow partitions.

END OF SECTION

SECTION 16075

ELECTRICAL IDENTIFICATION

PART 1 GENERAL

1.01 SECTION INCLUDES

A. Nameplates and labels.

B. Wire and cable markers.

C. Conduit markers.

D. Field-painted identification of conduit.

1.02 RELATED SECTIONS

A. Section 09900 - Paints and Coatings.

1.03 REFERENCES

A. NFPA 70 - National Electrical Code; National Fire Protection Association.

1.04 SUBMITTALS

A. See Section 01300 - Administrative Requirements for submittals procedures.

B. Product Data: Provide catalog data for nameplates, labels, and markers.

C. Manufacturer's Instructions: Indicate application conditions and limitations of use stipulated by product testing agency specified under Quality Assurance. Include instructions for storage, handling, protection, examination, preparation and installation of product.

1.05 QUALITY ASSURANCE

A. Conform to requirements of NFPA 70.

B. Products: Listed and classified by Underwriters Laboratories, Inc. as suitable for purpose specified and shown.

PART 2 PRODUCTS

2.01 NAMEPLATES AND LABELS

A. Nameplates: Engraved three-layer laminated plastic, black letters on white background.

B. Locations:

1. Each electrical distribution and control equipment enclosure.

C. Letter Size:

1. Use 1/8-inch letters for identifying individual equipment and loads.

D. Labels: Embossed adhesive tape, with 3/16-inch white letters on black background. Use only for identification of individual wall switches and receptacles, control device stations, and appurtenant items.

2.02 WIRE MARKERS

A. Description: tape type wire markers.

B. Locations: Each conductor at panelboard gutters, pull boxes, outlet boxes, and junction boxes and each load connection.

C. Legend:

1. Power and Lighting Circuits: Branch circuit or feeder number indicated on drawings.

2. Control Circuits: Control wire number indicated on schematic and interconnection diagrams on drawings.

2.03 CONDUIT MARKERS

A. Location: Furnish markers for each conduit longer than 6 feet.

B. Spacing: 20 feet on center.

2.04 UNDERGROUND WARNING TAPE

A. Description: 4-inch-wide plastic tape, detectable type colored red with suitable warning legend describing buried electrical lines.

PART 3 EXECUTION

3.01 PREPARATION

A. Degrease and clean surfaces to receive nameplates and labels.

3.02 INSTALLATION

A. Install nameplates and labels parallel to equipment lines.

B. Secure nameplates to equipment front using screws.

C. Secure nameplates to inside surface of door on panelboard that is recessed in finished locations.

D. Identify underground conduits using underground warning tape. Install one tape per trench at 3 inches below finished grade.

END OF SECTION

SECTION 16123

BUILDING WIRE AND CABLE

PART 1 GENERAL

1.01 SECTION INCLUDES

A. Wire and cable for 600 volts and less.

B. Wiring connectors and connections.

1.02 RELATED SECTIONS

A. Section 02312 - Trench Excavation.

B. Section 02315 - Excavation.

C. Section 02316 - Fill and Backfill: Bedding and backfilling.

D. Section 16075 - Electrical Identification.

1.03 REFERENCES

A. NECA (INST) - NECA Standard of Installation; National Electrical Contractors Association; latest edition.

B. NETA STD ATS - Acceptance Testing Specifications for Electrical Power Distribution Equipment and Systems; International Electrical Testing Association; latest edition.

C. NFPA 70 - National Electrical Code; National Fire Protection Association.

1.04 SUBMITTALS

A. See Section 01300 - Administrative Requirements, for submittal procedures.

B. Product Data: Provide for each wire and cable type.

C. Test Reports: Indicate procedures and values obtained.

D. Manufacturer's Installation Instructions: Indicate application conditions and limitations of use stipulated by product testing agency.

E. Project Record Documents: Record actual locations of components and circuits.

1.05 QUALITY ASSURANCE

A. Conform to requirements of NFPA 70.

B. Manufacturer Qualifications: Company specializing in manufacturing the Products specified in this section with minimum three years documented experience and with service facilities within 100 miles of Project.

C. Products: Furnish products listed and classified by Underwriters Laboratories Inc. as suitable for the purpose specified and indicated.

PART 2 PRODUCTS

2.01 WIRING REQUIREMENTS

A. Concealed Dry Interior Locations: Use only building wire with Type THW insulation in raceway.

B. Exposed Dry Interior Locations: Use only building wire with Type THW insulation in raceway.

C. Wet or Damp Interior Locations: Use only building wire with Type THW insulation in raceway or direct burial cable.

D. Exterior Locations: Use only building wire with Type THW insulation in raceway or direct burial cable.

E. Underground Installations: Use only building wire with Type USE insulation in raceway or direct burial cable.

F. Use solid conductor for feeders and branch circuits 10 AWG and smaller.

G. Use stranded conductors for control circuits.

H. Use conductor not smaller than 12 AWG for power and lighting circuits.

I. Use conductor not smaller than 16 AWG for control circuits.

J. Use 10 AWG conductors for 20 ampere, 120-volt branch circuits longer than 75 feet.

K. Use 10 AWG conductors for 20 ampere, 277-volt branch circuits longer than 200 feet.

L. Conductor sizes are based on copper.

2.02 BUILDING WIRE

A. Description: Single conductor insulated wire.

B. Conductor: Copper.

C. Insulation Voltage Rating: 600 volts.

D. Insulation: NFPA 70, Type THW.

2.03 DIRECT BURIAL CABLE

A. Description: NFPA 70, Type UF.

B. Conductor: Copper.

C. Insulation Voltage Rating: 600 volts.

2.04 SERVICE ENTRANCE CABLE

A. Description: NFPA 70, Type SE.

B. Conductor: Copper.

C. Insulation Voltage Rating: 600 volts.

D. Insulation: Type RH.

2.05 WIRING CONNECTORS

A. Split Bolt Connectors:

B. Solderless Pressure Connectors:

C. Spring Wire Connectors:

D. Compression Connectors:

PART 3 EXECUTION

3.01 EXAMINATION

A. Verify that interior of building has been protected from weather.

B. Verify that mechanical work likely to damage wire and cable has been completed.

C. Verify that raceway installation is complete and supported.

D. Verify that field measurements are as indicated.

3.02 PREPARATION

A. Completely and thoroughly swab raceway before installing wire.

3.03 INSTALLATION

A. Route wire and cable as required to meet project conditions.

1. Wire and cable routing indicated is approximate unless dimensioned.

2. Where wire and cable destination are indicated and routing is not shown, determine exact routing and lengths required.

3. Include wire and cable of lengths required to install connected devices within 10 ft of location shown.

B. Install wire and cable in accordance with the NECA "Standard of Installation."

C. Use wiring methods indicated.

D. Pull all conductors into raceway at same time.

E. Use suitable wire pulling lubricant for building wire 4 AWG and larger.

F. Protect exposed cable from damage.

G. Use suitable cable fittings and connectors.

H. Neatly train and lace wiring inside boxes, equipment, and panelboards.

I. Clean conductor surfaces before installing lugs and connectors.

J. Make splices, taps, and terminations to carry full ampacity of conductors with no perceptible temperature rise.

K. Use split bolt connectors for copper conductor splices and taps, 6 AWG and larger. Tape uninsulated conductors and connector with electrical tape to 150 percent of insulation rating of conductor.

L. Use solderless pressure connectors with insulating covers for copper conductor splices and taps, 8 AWG and smaller.

M. Use insulated spring wire connectors with plastic caps for copper conductor splices and taps, 10 AWG and smaller.

N. Trench and backfill for direct burial cable installation as specified in Sections 02315 and 02315. Install warning tape along entire length of direct burial cable, within 3 inches of grade.

O. Identify and color code wire and cable under provisions of Section 16075. Identify each conductor with its circuit number or other designation indicated.

3.04 FIELD QUALITY CONTROL

A. Perform field inspection and testing in accordance with Section 01400.

B. Inspect and test in accordance with NETA STD ATS, except Section 4.

C. Perform inspections and tests listed in NETA STD ATS, Section 7.3.1.

END OF SECTION

SECTION 16131

CONDUIT

PART 1 GENERAL

1.01 SECTION INCLUDES

A. Conduit, fittings and conduit bodies.

1.02 RELATED SECTIONS

A. Section 16060 - Grounding and Bonding.

B. Section 16070 - Hangers and Supports.

C. Section 16075 - Electrical Identification.

D. Section 16138 - Boxes.

1.03 REFERENCES

A. ANSI C80.1 - American National Standard Specification for Rigid Steel Conduit -- Zinc Coated; latest edition.

B. ANSI C80.3 - American National Standard Specification for Electrical Metallic Tubing -- Zinc Coated; latest edition.

C. ANSI C80.5 - American National Standard Specification for Rigid Aluminum Conduit; latest edition.

D. NECA (INST) - NECA Standard of Installation; National Electrical Contractors Association; latest edition.

E. NEMA FB 1 - Fittings, Cast Metal Boxes, and Conduit Bodies for Conduit and Cable Assemblies; National Electrical Manufacturers Association; latest edition.

F. NEMA RN 1 - Polyvinyl Chloride (PVC) Externally Coated Galvanized Rigid Steel Conduit and Intermediate Metal Conduit; National Electrical Manufacturers Association; latest edition.

G. NEMA TC 2 - Electrical Plastic Tubing (EPT) and Conduit (EPC-40 and EPC-80); National Electrical Manufacturers Association; latest edition.

H. NEMA TC 3 - PVC Fittings for Use with Rigid PVC Conduit and Tubing; National Electrical Manufacturers Association; latest edition.

I. NFPA 70 - National Electrical Code; National Fire Protection Association.

1.04 SUBMITTALS

A. See Section 01300 - Administrative Requirements for submittals procedures.

B. Product Data: Provide for metallic conduit, flexible metal conduit, liquid tight flexible metal conduit, metallic tubing, nonmetallic conduit, flexible nonmetallic conduit, nonmetallic tubing, fittings, and conduit bodies.

C. Project Record Documents: Accurately record actual routing of conduits larger than 2 inches.

1.05 QUALITY ASSURANCE

A. Conform to requirements of NFPA 70.

B. Products: Listed and classified by Underwriters Laboratories, Inc. as suitable for purpose specified and shown.

1.06 DELIVERY, STORAGE, AND HANDLING

A. Accept conduit on site. Inspect for damage.

B. Protect conduit from corrosion and entrance of debris by storing above grade. Provide appropriate covering.

C. Protect PVC conduit from sunlight.

PART 2 PRODUCTS

2.01 CONDUIT REQUIREMENTS

A. Conduit Size: Comply with NFPA 70.

1. Minimum Size: 3/4 inch unless otherwise specified.

B. Underground Installations:

1. More than Five Feet from Foundation Wall: Use plastic coated conduit or thickwall non-metallic conduit.

2. Within Five Feet from Foundation Wall: Use plastic coated conduit or thickwall nonmetallic conduit.

3. In or Under Slab on Grade: Use plastic coated conduit or thickwall non-metallic conduit.

4. Minimum Size: 3/4 inch.

C. Outdoor Locations Above Grade: Use rigid steel conduit or electrical metallic tubing.

D. In Slab Above Grade:

1. Use rigid steel conduit or electrical metallic tubing.

2. Maximum Size Conduit in Slab: one inch; 3/4 inch for conduits crossing each other.

E. Wet and Damp Locations: Use electrical metallic tubing or thickwall nonmetallic conduit.

F. Dry Locations:

1. Concealed: Use rigid steel conduit or electrical metallic tubing.

2. Exposed: Use electrical metallic tubing.

2.02 METAL CONDUIT

A. Rigid Steel Conduit: ANSI C80.1.

B. Fittings and Conduit Bodies: NEMA FB 1; material to match conduit.

2.03 PVC COATED METAL CONDUIT

A. Description: NEMA RN 1; rigid steel conduit with external PVC coating, 20 mil thick.

B. Fittings and Conduit Bodies: NEMA FB 1; steel fittings with external PVC coating to match conduit.

2.04 FLEXIBLE METAL CONDUIT

A. Description: Interlocked steel construction.

B. Fittings: NEMA FB 1.

2.05 LIQUIDTIGHT FLEXIBLE METAL CONDUIT

A. Description: Interlocked steel construction with PVC jacket.

B. Fittings: NEMA FB 1.

2.06 ELECTRICAL METALLIC TUBING (EMT)

A. Description: ANSI C80.3; galvanized tubing.

B. Fittings and Conduit Bodies: NEMA FB 1; steel or malleable iron compression type.

2.07 NONMETALLIC CONDUIT

A. Description: NEMA TC 2; Schedule 40 PVC.

B. Fittings and Conduit Bodies: NEMA TC 3.

2.08 NONMETALLIC TUBING

A. Description: NEMA TC 2.

B. Fittings and Conduit Bodies: NEMA TC 3.

PART 3 EXECUTION

3.01 EXAMINATION

A. Verify that field measurements are as shown on drawings.

B. Verify routing and termination locations of conduit prior to rough-in.

C. Conduit routing is shown on drawings in approximate locations unless dimensioned. Route as required to complete wiring system.

3.02 INSTALLATION

A. Install conduit in accordance with NECA Standard of Installation.

B. Install nonmetallic conduit in accordance with manufacturer's instructions.

C. Arrange supports to prevent misalignment during wiring installation.

D. Support conduit using coated steel or malleable iron straps, lay-in adjustable hangers, clevis hangers, and split hangers.

E. Group related conduits; support using conduit rack. Construct rack using steel channel; provide space on each for 25 percent additional conduits.

F. Fasten conduit supports to building structure and surfaces under provisions of Section 16070.

G. Do not support conduit with wire or perforated pipe straps. Remove wire used for temporary supports.

H. Do not attach conduit to ceiling support wires.

I. Arrange conduit to maintain headroom and present neat appearance.

J. Route exposed conduit parallel and perpendicular to walls.

K. Route conduit installed above accessible ceilings parallel and perpendicular to walls.

L. Route conduit in and under slab from point-to-point.

M. Maintain adequate clearance between conduit and piping.

N. Maintain 12-inch clearance between conduit and surfaces with temperatures exceeding 104 degrees F.

O. Cut conduit square using saw or pipe cutter; de-burr cut ends.

P. Bring conduit to shoulder of fittings; fasten securely.

Q. Join nonmetallic conduit using cement as recommended by manufacturer. Wipe nonmetallic conduit dry and clean before joining. Apply full even coat of cement to entire area inserted in fitting. Allow joint to cure for 20 minutes, minimum.

R. Use conduit hubs to fasten conduit to sheet metal boxes in damp and wet locations.

S. Install no more than equivalent of three 90-degree bends between boxes. Use conduit bodies to make sharp changes in direction, as around beams. Use hydraulic one-shot bender to fabricate bends in metal conduit larger than 2-inch size.

T. Avoid moisture traps; provide junction box with drain fitting at low points in conduit system.

U. Provide suitable fittings to accommodate expansion and deflection where conduit crosses seismic.

V. Provide suitable pull string in each empty conduit except sleeves and nipples.

W. Use suitable caps to protect installed conduit against entrance of dirt and moisture.

X. Ground and bond conduit as required.

Y. Identify conduit under provisions of Section 16075.

END OF SECTION

SECTION 16138

BOXES

PART 1 GENERAL

1.01 SECTION INCLUDES

A. Wall and ceiling outlet boxes.

B. Pull and junction boxes.

1.02 RELATED SECTIONS

A. Section 16139 - Cabinets and Enclosures.

B. Section 16140 - Wiring Devices: Wall plates in finished areas.

1.03 REFERENCES

A. NECA (INST) - NECA Standard of Installation; National Electrical Contractors Association; latest edition.

B. NEMA FB 1 - Fittings, Cast Metal Boxes, and Conduit Bodies for Conduit and Cable Assemblies; National Electrical Manufacturers Association; latest edition.

C. NEMA OS 1 - Sheet-Steel Outlet Boxes, Device Boxes, Covers and Box Supports; National Electrical Manufacturers Association; latest edition.

D. NEMA 250 - Enclosures for Electrical Equipment (1000 Volts Maximum); National Electrical Manufacturers Association; latest edition.

E. NFPA 70 - National Electrical Code; National Fire Protection Association.

1.04 SUBMITTALS

A. See Section 01300 - Administrative Requirements, for submittal procedures.

B. Project Record Documents: Record actual locations and mounting heights of outlet, pull, and junction boxes on project record documents.

1.05 QUALITY ASSURANCE

A. Conform to requirements of NFPA 70.

B. Products: Provide products listed and classified by Underwriters Laboratories, Inc., as suitable for the purpose specified and indicated.

PART 2 PRODUCTS

2.01 OUTLET BOXES

A. Sheet Metal Outlet Boxes: NEMA OS 1, galvanized steel.

1. Luminaire and Equipment Supporting Boxes: Rated for weight of equipment supported; include 1/2 inch male fixture studs where required.

B. Cast Boxes: NEMA FB 1, Type FD, aluminum. Provide gasketed cover by box manufacturer. Provide threaded hubs.

C. Wall Plates for Finished Areas: As specified in Section 16140.

2.02 PULL AND JUNCTION BOXES

A. Sheet Metal Boxes: NEMA OS 1, galvanized steel.

B. Hinged Enclosures: As specified in Section 16139.

C. Surface Mounted Cast Metal Box: NEMA 250, Type 4; flat-flanged, surface mounted junction box:

1. Material: Galvanized cast iron.

2. Cover: Furnish with ground flange, neoprene gasket, and stainless-steel cover screws.

D. In-Ground Cast Metal Box: NEMA 250, Type 6, outside flanged, recessed cover box for flush mounting:

1. Material: Galvanized cast iron.

2. Cover: Smooth cover with neoprene gasket and stainless-steel cover screws.

3. Cover Legend: "ELECTRIC".

PART 3 EXECUTION

3.01 EXAMINATION

A. Verify locations of floor boxes and outlets in offices and work areas prior to rough-in.

3.02 INSTALLATION

A. Install boxes in accordance with NECA "Standard of Installation."

B. Install in locations as shown on Drawings, and as required for splices, taps, wire pulling, equipment connections, and as required by NFPA 70.

C. Coordinate installation of outlet boxes for equipment connected under Section 16155.

D. Set wall mounted boxes at elevations to accommodate mounting heights specified in section for outlet device.

E. Electrical boxes are shown on Drawings in approximate locations unless dimensioned.

1. Adjust box locations up to 10 feet if required to accommodate intended purpose.

F. Orient boxes to accommodate wiring devices oriented as specified in Section 16140.

G. Maintain headroom and present neat mechanical appearance.

H. Coordinate mounting heights and locations of outlets mounted above counters, benches, and backsplashes.

I. Locate outlet boxes to allow luminaires positioned as shown on reflected ceiling plan.

J. Align adjacent wall mounted outlet boxes for switches, thermostats, and similar devices.

K. Use flush mounting outlet box in finished areas.

L. Locate flush mounting box in masonry wall to require cutting of masonry unit corner only. Coordinate masonry cutting to achieve neat opening.

M. Do not install flush mounting box back-to-back in walls; provide minimum 6 inches separation. Provide minimum 24 inches separation in acoustic rated walls.

N. Secure flush mounting box to interior wall and partition studs. Accurately position to allow for surface finish thickness.

O. Use stamped steel bridges to fasten flush mounting outlet box between studs.

P. Use adjustable steel channel fasteners for hung ceiling outlet box.

Q. Do not fasten boxes to ceiling support wires.

R. Support boxes independently of conduit.

S. Use gang box where more than one device is mounted together. Do not use sectional box.

T. Use cast outlet box in exterior locations exposed to the weather and wet locations.

U. Large Pull Boxes: Use hinged enclosure in interior dry locations, surface-mounted cast metal box in other locations.

3.03 ADJUSTING

A. Adjust flush-mounting outlets to make front flush with finished wall material.

B. Install knockout closures in unused box openings.

3.04 CLEANING

A. Clean interior of boxes to remove dust, debris, and other material.

B. Clean exposed surfaces and restore finish.

END OF SECTION

SECTION 16139

CABINETS AND ENCLOSURES

PART 1 GENERAL

1.01 SECTION INCLUDES

A. Hinged cover enclosures.

B. Cabinets.

C. Terminal blocks.

D. Accessories.

1.02 RELATED SECTIONS

A. Section 16070 - Hangers and Supports.

1.03 REFERENCES

A. NECA (INST) - NECA Standard of Installation; National Electrical Contractors Association; latest edition.

B. NEMA 250 - Enclosures for Electrical Equipment (1000 Volts Maximum); National Electrical Manufacturers Association; latest edition.

C. NEMA ICS 4 - Industrial Control and Systems: Terminal Blocks; National Electrical Manufacturers Association; latest edition.

D. NFPA 70 - National Electrical Code; National Fire Protection Association.

1.04 SUBMITTALS

A. See Section 01300 - Administrative Requirements, for submittal procedures.

B. Product Data: Provide manufacturer's standard data for enclosures and cabinets.

C. Manufacturer's Instructions: Indicate application conditions and limitations of use stipulated by product testing agency specified under Quality Assurance. Include instructions for storage, handling, protection, examination, preparation, and installation of product.

1.05 QUALITY ASSURANCE

A. Conform to requirements of NFPA 70.

B. Products: Listed and classified by Underwriters Laboratories, Inc. as suitable for the purpose specified and indicated.

1.06 MAINTENANCE MATERIALS

A. Furnish two of each key.

PART 2 PRODUCTS

2.01 HINGED COVER ENCLOSURES

A. Construction: NEMA 250, Type 1 steel enclosure.

B. Covers: Continuous hinge, held closed by flush latch operable by screwdriver.

C. Provide interior plywood panel for mounting terminal blocks and electrical components; finish with white enamel.

D. Enclosure Finish: Manufacturer's standard enamel.

2.02 CABINETS

A. Boxes: Galvanized steel.

B. Backboard: Provide 3/4-inch-thick plywood backboard for mounting terminal blocks. Paint matte white or other color as selected by the District Inspector.

C. Fronts: Steel, flush type with concealed trim clamps, door with concealed hinge, and flush lock keyed to match branch circuit panelboard. Finish with gray baked enamel.

D. Provide metal barriers to form separate compartments wiring of different systems and voltages.

E. Provide accessory feet for free-standing equipment.

2.03 TERMINAL BLOCKS

A. Terminal Blocks: NEMA ICS 4.

B. Power Terminals: Unit construction type with closed back and tubular pressure screw connectors, rated 600 volts.

C. Signal and Control Terminals: Modular construction type, suitable for channel mounting, with tubular pressure screw connectors, rated 300 volts.

D. Provide ground bus terminal block, with each connector bonded to enclosure.

2.04 ACCESSORIES

A. Plastic Raceway: Plastic channel with hinged or snap-on cover.

PART 3 EXECUTION

3.01 INSTALLATION

A. Install in accordance with NECA Standard of Installation.

B. Install enclosures and boxes plumb. Anchor securely to wall and structural supports at each corner under the provisions of Section 16070.

C. Install cabinet fronts plumb.

3.02 CLEANING

A. Clean electrical parts to remove conductive and harmful materials.

B. Remove dirt and debris from enclosure.

C. Clean finishes and touch up damage.

END OF SECTION

SECTION 16140

WIRING DEVICES

PART 1 GENERAL

1.01 SECTION INCLUDES

A. Wall switches.

B. Receptacles.

C. Device plates and covers.

1.02 RELATED SECTIONS

A. Section 16138 - Boxes.

1.03 REFERENCES

A. NECA (INST) - NECA Standard of Installation; National Electrical Contractors Association; latest edition.

B. NEMA WD 1 - General Requirements for Wiring Devices; National Electrical Manufacturers Association; latest edition.

C. NEMA WD 6 - Wiring Device -- Dimensional Requirements; National Electrical Manufacturers Association; latest edition.

D. NFPA 70 - National Electrical Code; National Fire Protection Association.

1.04 SUBMITTALS

A. See Section 01300 - Administrative Requirements, for submittal procedures.

B. Product Data: Provide manufacturer's catalog information showing dimensions, colors, and configurations.

C. Manufacturer's Installation Instructions.

1.05 QUALITY ASSURANCE

A. Conform to requirements of NFPA 70.

B. Manufacturer Qualifications: Company specializing in manufacturing the products specified in this section with minimum three years documented experience.

C. Products: Provide products listed and classified by Underwriters Laboratories, Inc. as suitable for the purpose specified and indicated.

PART 2 PRODUCTS

2.01 WALL SWITCHES

A. Wall Switches: NEMA WD 1, Heavy Duty, AC only general-use snap switch.

1. Body and Handle: Ivory plastic with toggle handle.

2. Ratings:
   a. Voltage: 120 volts, AC.
   b. Current: 20 amperes.

2.02 RECEPTACLES

A. Receptacles: NEMA WD 1, Heavy duty.

1. Device Body: Ivory plastic.

2. Configuration: NEMA WD 6, type as specified and indicated.

B. GFCI Receptacles: Convenience receptacle with integral ground fault circuit interrupter to meet regulatory requirements.

2.03 WALL PLATES

A. Cover Plates: Galvanized metal.

B. Jumbo Cover Plates: Galvanized metal.

C. Weatherproof Cover Plates: Gasketed cast metal with hinged.

PART 3 EXECUTION

3.01 EXAMINATION

A. Verify that outlet boxes are installed at proper height.

B. Verify that wall openings are neatly cut and will be completely covered by wall plates.

C. Verify that branch circuit wiring installation is completed, tested, and ready for connection to wiring devices.

3.02 PREPARATION

A. Provide extension rings to bring outlet boxes flush with finished surface.

B. Clean debris from outlet boxes.

3.03 INSTALLATION

A. Install in accordance with NECA "Standard of Installation."

B. Install devices plumb and level.

C. Install switches with OFF position down.

D. Install receptacles with grounding pole on top.

E. Connect wiring device grounding terminal to outlet box with bonding jumper.

F. Install decorative plates on switch, receptacle, and blank outlets in finished areas.

G. Connect wiring devices by wrapping conductor around screw terminal.

H. Use jumbo size plates for outlets installed in masonry walls.

I. Install galvanized steel plates on outlet boxes and junction boxes in unfinished areas, above accessible ceilings, and on surface mounted outlets.

3.04 FIELD QUALITY CONTROL

A. Perform field inspection, testing, and adjusting in accordance with Section 01400.

B. Inspect each wiring device for defects.

C. Operate each wall switch with circuit energized and verify proper operation.

D. Verify that each receptacle device is energized.

E. Test each receptacle device for proper polarity.

F. Test each GFCI receptacle device for proper operation.

3.05 ADJUSTING

A. Adjust devices and wall plates to be flush and level.

3.06 CLEANING

A. Clean exposed surfaces to remove splatters and restore finish.

END OF SECTION

SECTION 16155

EQUIPMENT WIRING

PART 1 GENERAL

1.01 SECTION INCLUDES

A. Electrical connections to equipment.

1.02 RELATED SECTIONS

A. Section 16131 - Conduit.

B. Section 16123 - Building Wire and Cable.

C. Section 16138 - Boxes.

D. Section 16140 - Wiring Devices.

1.03 REFERENCES

A. NEMA WD 1 - General Requirements for Wiring Devices; National Electrical Manufacturers Association; latest edition.

B. NEMA WD 6 - Wiring Devices - Dimensional Requirements; National Electrical Manufacturers Association; latest edition.

C. NFPA 70 - National Electrical Code; National Fire Protection Association.

1.04 SUBMITTALS

A. See Section 01300 - Administrative Requirements, for submittal procedures.

B. Product Data: Provide wiring device manufacturer’s catalog information showing dimensions, configurations, and construction.

C. Manufacturer's Instructions: Indicate application conditions and limitations of use stipulated by product testing agency. Include instructions for storage, handling, protection, examination, preparation, and installation of product.

1.05 QUALITY ASSURANCE

A. Conform to requirements of NFPA 70.

B. Products: Listed and classified by Underwriters Laboratories, Inc. as suitable for the purpose specified and indicated.

1.06 COORDINATION

A. Obtain and review shop drawings, product data, manufacturer's wiring diagrams, and manufacturer's instructions for equipment furnished under other sections.

B. Determine connection locations and requirements.

C. Sequence rough-in of electrical connections to coordinate with installation of equipment.

D. Sequence electrical connections to coordinate with start-up of equipment.

PART 2 PRODUCTS

2.01 MATERIALS

A. Cords and Caps: NEMA WD 6; match receptacle configuration at outlet provided for equipment.

1. Attachment Plug Construction: Conform to NEMA WD 1.

2. Cord Construction: NFPA 70, Type SO multiconductor flexible cord with identified equipment grounding conductor, suitable for use in damp locations.

3. Size: Suitable for connected load of equipment, length of cord, and rating of branch circuit overcurrent protection.

B. Disconnect Switches: As specified in applicable Sections and in individual equipment sections.

C. Wiring Devices: As specified in Section 16140.

D. Flexible Conduit: As specified in Section 16131.

E. Wire and Cable: As specified in Section 16123.

F. Boxes: As specified in Section 16138.

2.02 EQUIPMENT CONNECTIONS

A. Electrical equipment shall be connected as indicated, as required and as directed:

1. Electrical Connection: Flexible conduit where required.

2. Electrical Connection: Cord and plug (NEMA 6-20R).

3. Provide field-installed disconnect switch.

4. Voltage: 120 volts, 1 phase, 60 Hz.

5. Load rating: Not applicable.

PART 3 EXECUTION

3.01 EXAMINATION

A. Verify that equipment is ready for electrical connection, wiring, and energization.

3.02 ELECTRICAL CONNECTIONS

A. Make electrical connections in accordance with equipment manufacturer's instructions.

B. Make conduit connections to equipment using flexible conduit. Use liquid tight flexible conduit with watertight connectors in damp or wet locations.

C. Connect heat producing equipment using wire and cable with insulation suitable for temperatures encountered.

D. Provide receptacle outlet to accommodate connection with attachment plug.

E. Provide cord and cap where field-supplied attachment plug is required.

F. Install suitable strain-relief clamps and fittings for cord connections at outlet boxes and equipment connection boxes.

G. Install disconnect switches, controllers, control stations, and control devices to complete equipment wiring requirements.

H. Install terminal block jumpers to complete equipment wiring requirements.

I. Install interconnecting conduit and wiring between devices and equipment to complete equipment wiring requirements.

END OF SECTION

SECTION 16210

ELECTRICAL UTILITY SERVICES

PART 1 GENERAL

1.01 SECTION INCLUDES

A. Constructing electrical service.

1.02 REFERENCES

A. NECA (INST) - NECA Standard of Installation; National Electrical Contractors Association; latest edition.

B. NFPA 70 - National Electrical Code; National Fire Protection Association.

1.03 SYSTEM DESCRIPTION

A. System Characteristics: 240 volts, single phase, 60 Hertz.

B. Service Entrance: as indicated on the drawings.

1.04 SUBMITTALS

A. See Section 01300 - Administrative Requirements, for submittal procedures.

B. Product Data: Provide ratings and dimensions of transformer cabinets and meter bases.

1.05 QUALITY ASSURANCE

A. Perform work in accordance with utility company written requirements and NFPA 70.

1. Maintain one copy of each document on site.

B. Products: Listed and classified by Underwriters Laboratories, Inc. as suitable for the purpose specified and indicated.

PART 2 PRODUCTS

2.01 COMPONENTS

A. Meter Base: As required by utility company.

B. Other Components: Combination service entrance device, as indicated on the drawings, in rainproof, surface mount enclosure. Combination service entrance device shall be Catalog # SCI1624M100S, as manufactured by Square D, or acceptable equal.

PART 3 EXECUTION

3.01 PREPARATION

A. Arrange with utility company to obtain permanent electric service to the Project.

B. Verify that field measurements are as indicated on utility company drawings.

3.02 INSTALLATION

A. Construct electrical pedestal, with combination service entrance device, as indicated on the drawings and as directed by the District Inspector and as required by utility company.

B. Construct and install in accordance with NECA "Standard of Installation."

END OF SECTION

SECTION 16412

ENCLOSED SWITCHES

PART 1 GENERAL

1.01 SECTION INCLUDES

A. Fusible switches.

1.02 REFERENCES

A. NECA (INST) - NECA Standard of Installation; National Electrical Contractors Association; latest edition.

B. NEMA FU 1 - Low Voltage Cartridge Fuses; National Electrical Manufacturers Association; latest edition.

C. NEMA KS 1 - Enclosed and Miscellaneous Distribution Equipment Switches (600 Volts Maximum); National Electrical Manufacturers Association; latest edition.

D. NETA STD ATS - Acceptance Testing Specifications for Electrical Power Distribution Equipment and Systems; International Electrical Testing Association; latest edition.

E. NFPA 70 - National Electrical Code; National Fire Protection Association.

1.03 SUBMITTALS

A. See Section 01300 - Administrative Requirements, for submittal procedures.

B. Product Data: Provide switch ratings and enclosure dimensions.

C. Project Record Documents: Record actual locations of enclosed switches.

1.04 QUALITY ASSURANCE

A. Conform to requirements of NFPA 70.

B. Manufacturer Qualifications: Company specializing in manufacturing the products specified in this section with minimum three years documented experience and with service facilities within 100 miles of Project.

C. Products: Listed and classified by Underwriters Laboratories, Inc. as suitable for the purpose specified and indicated.

PART 2 PRODUCTS

2.01 COMPONENTS

A. Fusible Switch Assemblies: NEMA KS 1, Type HD enclosed load interrupter knife switch.

1. Externally operable handle interlocked to prevent opening front cover with switch in ON position.

2. Handle lockable in OFF position.

3. Fuse clips: Designed to accommodate NEMA FU1, Class R fuses.

B. Enclosures: NEMA KS 1.

1. Interior Dry Locations: Type 1.

2. Exterior Locations: Type 3R.

PART 3 EXECUTION

3.01 INSTALLATION

A. Install in accordance with NECA Standard of Installation.

B. Install fuses in fusible disconnect switches.

C. Apply adhesive tag on inside door of each fused switch indicating NEMA fuse class and size installed.

3.02 FIELD QUALITY CONTROL

A. Perform field inspection in accordance with Section 01400.

B. Inspect and test in accordance with NETA STD ATS, except Section 4.

C. Perform inspections and tests listed in NETA STD ATS, Section 7.5.

END OF SECTION

SECTION 16443

PANELBOARDS

PART 1 GENERAL

1.01 SECTION INCLUDES

A. Distribution panelboards.

B. Branch circuit panelboards.

C. Load centers.

1.02 RELATED SECTIONS

A. Section 16075 - Electrical Identification.

1.03 REFERENCES

A. NECA (INST) - NECA Standard of Installation; National Electrical Contractors Association; latest edition.

B. NEMA AB 1 - Molded Case Circuit Breakers and Molded Case Switches; National Electrical Manufacturers Association; latest edition.

C. NEMA ICS 2 - Industrial Control and Systems: Controllers, Contactors, and Overload Relays, Rated Not More Than 2000 Volts AC or 750 Volts DC; National Electrical Manufacturers Association; latest edition.

D. NEMA KS 1 - Enclosed and Miscellaneous Distribution Equipment Switches (600 Volts Maximum); National Electrical Manufacturers Association; latest edition.

E. NEMA PB 1 - Panelboards; National Electrical Manufacturers Association; latest edition.

F. NEMA PB 1.1 - General Instructions for Proper Installation, Operation and Maintenance of Panelboards Rated 600 Volts or Less; National Electrical Manufacturers Association; latest edition.

G. NETA STD ATS - Acceptance Testing Specifications for Electrical Power Distribution Equipment and Systems; International Electrical Testing Association; latest edition.

H. NFPA 70 - National Electrical Code; National Fire Protection Association.

1.04 SUBMITTALS

A. See Section 01300 - Administrative Requirements, for submittal procedures.

B. Shop Drawings: Indicate outline and support point dimensions, voltage, main bus ampacity, integrated short circuit ampere rating, circuit breaker and fusible switch arrangement and sizes.

C. Manufacturer's Installation Instructions: Indicate application conditions and limitations of use stipulated by product testing agency. Include instructions for storage, handling, protection, examination, preparation, and installation of product.

D. Project Record Documents: Record actual locations of panelboards and record actual circuiting arrangements.

E. Maintenance Data: Include spare parts listing; source and current prices of replacement parts and supplies; and recommended maintenance procedures and intervals.

1.05 QUALITY ASSURANCE

A. Conform to requirements of NFPA 70.

B. Manufacturer Qualifications: Company specializing in manufacturing the products specified in this section with minimum three years documented experience.

C. Products: Listed and classified by Underwriters Laboratories, Inc. as suitable for the purpose specified and indicated.

1.06 MAINTENANCE MATERIALS

A. See Section 01600 - Product Requirements, for additional provisions.

B. Furnish two of each panelboard key.

PART 2 PRODUCTS

2.01 DISTRIBUTION PANELBOARDS

A. Description: NEMA PB 1, circuit breaker type.

B. Panelboard Bus: Copper, ratings as indicated. Provide copper ground bus in each panelboard.

C. Minimum integrated short circuit rating: As indicated.

D. Fusible Switch Assemblies: NEMA KS 1, quick-make, quick-break, load interrupter enclosed knife switch with externally operable handle. Provide interlock to prevent opening front cover with switch in ON position. Handle lockable in OFF position. Fuse clips: Designed to accommodate Class R fuses.

E. Molded Case Circuit Breakers: NEMA AB 1, circuit breakers with integral thermal and instantaneous magnetic trip in each pole. Provide circuit breakers UL listed as Type HACR for air conditioning equipment branch circuits.

F. Current Limiting Molded Case Circuit Breakers: NEMA AB 1, circuit breakers with integral thermal and instantaneous magnetic trip in each pole, coordinated with automatically resetting current limiting elements in each pole. Interrupting rating 100,000 symmetrical amperes, let-through current and energy level less than permitted for same size Class RK-5 fuse.

G. Controllers: NEMA ICS 2, AC general-purpose Class A magnetic controller for induction motors rated in horsepower, with bimetal overload relay.

1. Coil operating voltage: 120 volts, 60 Hz.

2. Size as shown on Drawings.

3. Provide unit mounted control power transformer, RED indicating light in front cover.

H. Circuit Breaker Accessories: Trip units and auxiliary switches as indicated.

I. Enclosure: NEMA PB 1 cabinet box; type and size as required.

J. Cabinet Front: Surface type, fastened with concealed trim clamps, hinged door with flush lock, metal directory frame, finished in manufacturer's standard gray enamel.

2.02 BRANCH CIRCUIT PANELBOARDS

A. Description: NEMA PB1, circuit breaker type, lighting and appliance branch circuit panelboard.

B. Panelboard Bus: Copper, ratings as indicated. Provide copper ground bus in each panelboard; provide insulated ground bus where scheduled.

C. Minimum Integrated Short Circuit Rating: As indicated.

D. Molded Case Circuit Breakers: NEMA AB 1, bolt-on type thermal magnetic trip circuit breakers, with common trip handle for all poles.

1. Type SWD for lighting circuits.

2. Class A ground fault interrupter circuit breakers where scheduled.

E. Current Limiting Molded Case Circuit Breakers: NEMA AB 1, circuit breakers with integral thermal and instantaneous magnetic trip in each pole, coordinated with automatically resetting current limiting elements in each pole. Interrupting rating 100,000 symmetrical amperes, let-through current and energy level less than permitted for same size Class RK-5 fuse.

F. Enclosure: NEMA PB 1, Type 1.

G. Cabinet Box: 6 inches deep, 20 inches wide for 240 volt and less panelboards, 20 inches wide for 480 volt panelboards.

H. Cabinet Front: Flush cabinet front with concealed trim clamps, concealed hinge, metal directory frame, and flush lock all keyed alike. Finish in manufacturer's standard gray enamel.

2.03 LOAD CENTERS

A. Description: Circuit breaker load center, with bus ratings as indicated.

B. Minimum Integrated Short Circuit Rating: 10,000 amperes rms symmetrical.

C. Molded Case Circuit Breakers: NEMA AB 1, plug-on type thermal magnetic trip circuit breakers, with common trip handle for all poles.

1. Type SWD for lighting circuits.

2. Class A ground fault interrupter circuit breakers where indicated.

D. Enclosure: General Purpose.

E. Box: Flush type with door, and pull ring and latch on door. Finish in manufacturer's standard gray enamel.

PART 3 EXECUTION

3.01 INSTALLATION

A. Install panelboards in accordance with NEMA PB 1.1 and the NECA Standard of Installation.

B. Install panelboards plumb. Install recessed panelboards flush with wall finishes.

C. Height: 6 feet to top of panelboard; install panelboards taller than 6 feet with bottom no more than 4 inches above floor.

D. Provide filler plates for unused spaces in panelboards.

E. Provide typed or neatly handwritten circuit directory for each branch circuit panelboard. Revise directory to reflect circuiting changes required to balance phase loads.

F. Provide engraved plastic nameplates under the provisions of Section 16075.

G. Provide spare conduits out of each recessed panelboard to an accessible location above ceiling. Identify each as SPARE.

H. Ground and bond panelboard enclosure as required.

3.02 FIELD QUALITY CONTROL

A. Perform field inspection and testing in accordance with Section 01400.

B. Inspect and test in accordance with NETA STD ATS, except Section 4.

C. Perform inspections and tests listed in NETA STD ATS, Section 7.4 for switches, Section 7.5 for circuit breakers.

3.03 ADJUSTING

A. Measure steady state load currents at each panelboard feeder; rearrange circuits in the panelboard to balance the phase loads to within 20 percent of each other. Maintain proper phasing for multi-wire branch circuits.

END OF SECTION

SECTION 16510

INTERIOR LUMINAIRES

PART 1 GENERAL

1.01 SECTION INCLUDES

A. Interior luminaires for valve box structure, to include:

1. Interior luminaires and accessories.

2. Lamps.

3. Luminaire accessories.

1.02 REFERENCES

A. ANSI C78.379 - American National Standard for Electric Lamps -- Reflector Lamps -- Classification of Beam Patterns; latest edition.

B. ANSI C82.1 - American National Standard Specifications for Fluorescent Lamp Ballasts; latest edition.

C. ANSI C82.4 - American National Standard for Ballasts for High-Intensity-Discharge and Low Pressure Sodium Lamps (Multiple-Supply Type); latest edition.

D. NEMA WD 6 - Wiring Devices - Dimensional Requirements; National Electrical Manufacturers Association; latest edition.

E. NFPA 70 - National Electrical Code; National Fire Protection Association.

F. NFPA 101 - Code for Safety to Life from Fire in Buildings and Structures; National Fire Protection Association.

1.03 SUBMITTALS

A. See Section 01300 - Administrative Requirements, for submittal procedures.

B. Shop Drawings: Indicate dimensions and components for each luminaire that is not a standard product of the manufacturer.

C. Product Data: Provide dimensions, ratings, and performance data.

D. Manufacturer's Installation Instructions: Indicate application conditions and limitations of use stipulated by product testing agency specified under Quality Assurance. Include instructions for storage, handling, protection, examination, preparation, and installation of product.

E. Operation and Maintenance Data: Instructions for each product.

1.04 QUALITY ASSURANCE

A. Conform to requirements of NFPA 70 and NFPA 101.

B. Manufacturer Qualifications: Company specializing in manufacturing the products specified in this section with minimum three years documented experience.

C. Products: Listed and classified by Underwriters Laboratories, Inc. as suitable for the purpose specified and indicated.

1.05 EXTRA MATERIALS

A. See Section 01600 - Product Requirements, for additional provisions.

B. Furnish one replacement lamps for each lamp type.

PART 2 PRODUCTS

2.01 LUMINAIRES

A. Furnish products as indicated on the Drawings.

B. Substitutions: See Section 01600 - Product Requirements.

2.02 LAMPS

A. Lamp Types: As specified for each luminaire.

PART 3 EXECUTION

3.01 INSTALLATION

A. Install surface mounted luminaires plumb and adjust to align with building lines and with each other. Secure to prevent movement.

B. Install wall mounted luminaires at height as indicated on Drawings.

C. Install accessories furnished with each luminaire.

D. Connect luminaires to branch circuit outlets provided under Section 16138 using conduit.

E. Make wiring connections to branch circuit using building wire with insulation suitable for temperature conditions within luminaire.

F. Bond products and metal accessories to branch circuit equipment grounding conductor.

3.02 FIELD QUALITY CONTROL

A. Perform field inspection in accordance with Section 01400.

B. Operate each luminaire after installation and connection. Inspect for proper connection and operation.

3.03 ADJUSTING

A. Aim and adjust luminaires as indicated.

3.04 CLEANING

A. Clean electrical parts to remove conductive and deleterious materials.

B. Remove dirt and debris from enclosures.

C. Clean photometric control surfaces as recommended by manufacturer.

D. Clean finishes and touch up damage.

3.05 DEMONSTRATION AND INSTRUCTIONS

A. Demonstrate luminaire operation for minimum of two hours.

3.06 PROTECTION

A. Re-lamp luminaires that have failed lamps at Substantial Completion.

END OF SECTION

POWDER MOUNTAIN WATER & SEWER IMPROVEMENT DISTRICT

350,000 GALLON CULINARY WATER TANK

POW.010.20 (PHASE 6)
MARCH 2021

SHEET INDEX	
	COVER SHEET
G.101	INDEX AND LEGEND
C.101	EXISTING SITE PLAN
C.102	PROPOSED SITE / YARD PIPING PLAN
D.101	TANK ROOF AND FOOTING PLAN
D.102	TANK SECTION VIEW & DETAILS
D.103	TANK LADDER DETAILS
D.104	TANK CONNECTION DETAILS
D.105	TANK PIPING DETAILS - PLAN VIEW
D.106	TANK PIPING DETAILS - SECTION VIEW
D.107	ROOF AIR VENT DETAILS
D.108	AIR VENT ENCLOSURE DETAILS
D.109	DISTRIBUTION VALVE BOX
D.110	VAULT DETAILS
D.111	VAULT DETAILS
D.112	VAULT DETAILS
D.113	TANK CONTROL DETAILS
D.114	ELECTRICAL DETAILS
D.115	DETAILS
D.116	WATERLINE TRENCH DETAILS
ER.100	EROSION CONTROL PLAN
ER.101	BMP DETAILS
ER.102	BMP DETAILS
ER.103	BMP DETAILS
ER.104	BMP DETAILS

LOCATED AT POWDER MOUNTAIN
WEBER COUNTY, UTAH

GILSON ENGINEERING
Consulting Engineers & Surveyors
12401 SOUTH 450 EAST BUILDING C, UNIT 2, DRAPER, UT 84020
PHONE: (801) 571-9414 FAX: (801) 571-9449

LICENSED PROFESSIONAL ENGINEER
03/10/21
No. 4939908-2202
James J. Milligan
STATE OF UTAH

FOR BID
03-10-2021

350,000 GALLON CULINARY WATER TANK
POW.010.20

GENERAL NOTES

1. THIS DESIGN IS AN ORIGINAL UNPUBLISHED WORK AND MAY NOT BE DUPLICATED, PUBLISHED AND/OR USED WITHOUT THE WRITTEN CONSENT OF GILSON ENGINEERING, INC.

2. THESE SHEETS - LISTED BY DRAWING INDEX, ALL ACCOMPANYING SPECIFICATIONS FOR MATERIALS, WORKMANSHIP QUALITY, AND NOTES HAVE BEEN PREPARED SOLELY FOR THE CONSTRUCTION AND FINISH OF PROJECT IMPROVEMENTS, COMPLETE AND READY FOR USE.

3. ALL WORK IS TO BE PERFORMED IN ACCORDANCE WITH PERTINENT JURISDICTIONAL CODES, RESTRICTIONS, COVENANTS, AND/OR ORDINANCES. ANY CONFLICT BETWEEN DESIGN AND REQUIREMENT SHALL BE REPORTED TO GILSON ENGINEERING, INC. BEFORE PROCEEDING. FAILURE TO DO SO VOIDS THE DESIGN.

4. ANY AND ALL PROPOSED CHANGE, MODIFICATIONS AND/OR SUBSTITUTION SHALL BE REPORTED TO GILSON ENGINEERING, INC. BEFORE PROCEEDING. ANY DEVIATION FROM THE CONTRACT DOCUMENTS, WITHOUT THE EXPRESS WRITTEN AUTHORIZATION OF GILSON ENGINEERING, INC. VOIDS THE DESIGN.

5. IN THE EVENT OF CONFLICT BETWEEN THE DESIGN DOCUMENTS AND/OR JURISDICTIONAL REQUIREMENTS, THE MORE RESTRICTIVE FROM THE STANDPOINT OF SAFETY AND PHYSICAL SECURITY SHALL APPLY.

6. ANY INSTALLATION OR WORK NECESSARY TO THE FUNCTIONING, SAFETY AND/OR PHYSICAL SECURITY OF DESIGN THAT IS TO BE ENCAPSULATED OR OTHERWISE PERMANENTLY OBSCURED FROM INSPECTION SHALL BE REPORTED TO GILSON ENGINEERING, INC. A MINIMUM OF TWO (2) WORKING DAYS BEFORE ENCLOSURE.

7. DESIGN IS GENERALLY PREDICATED UPON PROVISIONS OF THE CURRENT EDITION OF THE INTERNATIONAL BUILDING CODE AND/OR AMENDMENTS AS MAY HAVE BEEN LOCALLY ENACTED. THIS DESIGN AND ANY CONSEQUENT CONSTRUCTION SHALL ACCOMMODATE ALL REQUIREMENTS OF THE JURISDICTIONAL FIRE SAFETY/PREVENTION DISTRICT.

8. ANY DAMAGE, DISRUPTION OR COMPROMISE OF AMBIENT RIGHTS-OF-WAY, UTILITIES, OR ENVIRONMENTAL QUALITY SHALL BE IMMEDIATELY RECTIFIED BY THE CONTRACTOR TO THE SATISFACTION OF GILSON ENGINEERING, INC. AT NO COST TO THE OWNER.

9. THIS DESIGN PURPORTS TO PERMIT FULL ACCESS TO HANDICAPPED PERSONS AS PROVIDED FOR BY PROVISIONS OF FEDERAL LAW. ANY DEVIATION OR COMPROMISE SHALL BE REPORTED TO GILSON ENGINEERING, INC. FOR RESOLUTION.

10. ALL WORK SHALL BE INSPECTED BY GOVERNING AGENCIES IN ACCORDANCE WITH THEIR REQUIREMENTS. JURISDICTIONAL APPROVAL SHALL BE SECURED BEFORE PROCEEDING WITH WORK

UTILITY NOTES

1. COORDINATE ALL UTILITY CONNECTIONS WITH PLUMBING PLANS, SITE PLAN AND CONTRACTOR.

2. VERIFY DEPTH AND LOCATION OF ALL EXISTING UTILITIES PRIOR TO CONSTRUCTING ANY NEW UTILITY LINES. NOTIFY CIVIL ENGINEER OF ANY DISCREPANCIES OR CONFLICTS PRIOR TO ANY CONNECTIONS BEING MADE.

3. WATER LINES, VALVES, FIRE HYDRANTS, FITTINGS ETC. ARE TO BE CONSTRUCTED PER PLUMBING PLANS AND SITE PLAN (BY OTHERS). CONTRACTOR IS RESPONSIBLE TO CONSTRUCT ANY VERTICAL ADJUSTMENTS NECESSARY TO CLEAR SEWER, STORM DRAIN OR OTHER UTILITIES AS NECESSARY INCLUDING VALVE BOXES AND HYDRANT SPOOLS TO PROPER GRADE.

EROSION CONTROL NOTES

1. AT ALL TIMES DURING CONSTRUCTION, THE CONTRACTOR SHALL BE RESPONSIBLE FOR PREVENTING AND CONTROLLING EROSION DUE TO WIND AND RUNOFF. THE CONTRACTOR SHALL ALSO BE RESPONSIBLE FOR MAINTAINING THE EROSION CONTROL FACILITIES SHOWN ON THE PLAN.

2. CONTRACTOR SHALL BE RESPONSIBLE FOR CLEANING DRAINAGE AND EROSION CONTROL FACILITIES AS REQUIRED. STREETS SHALL BE KEPT CLEAN OF DEBRIS FROM TRAFFIC FROM THE SITE.

3. CONTRACTOR SHALL USE VEHICLE TRACKING CONTROL AT ALL LOCATIONS WHERE VEHICLES WILL ENTER OR EXIT THE SITE. CONTROL FACILITIES WILL BE MAINTAINED WHILE CONSTRUCTION IS IN PROGRESS, MOVED WHEN NECESSARY, AND REMOVED WHEN THE SITE IS PAVED.

4. INLET PROTECTION DEVICES SHALL BE INSTALLED IMMEDIATELY UPON INDIVIDUAL INLETS BECOMING FUNCTIONAL.

5. ALL WASH WATER (CONCRETE TRUCKS, VEHICLE CLEANING, ETC.) SHALL BE DISPOSED IN A MANNER THAT PREVENTS CONTACT WITH STORM WATER DISCHARGES FROM THE SITE.

6. FUGITIVE DUST AREAS SHALL BE CONTROLLED BY SPRAYING WATER ON THE DRY AREAS OF THE SITE.

7. NO RUBBISH, TRASH, GARBAGE OR OTHER SUCH MATERIALS SHALL BE DISCHARGED INTO DRAINAGE DITCHES OR WATERS OF THE STATE.

8. ALL MATERIALS SPILLED, DROPPED, WASHED OR TRACKED FROM VEHICLES ONTO ROADWAYS OR INTO STORM DRAINS MUST BE REMOVED IMMEDIATELY.

9. THE CONTRACTOR SHALL BE RESPONSIBLE FOR ADJUSTING THE EROSION CONTROL MEASURES (SILT FENCES, STRAW BALES, ETC.) DUE TO GRADE CHANGES OR OTHER UNFORESEEN CONDITIONS DURING DEVELOPMENT OF THE PROJECT.

CONSTRUCTION NOTES

1. ALL WORK WITHIN THE SITE TO CONFORM TO THE CURRENT DISTRICT STANDARDS AND SPECIFICATIONS.

2. THE CONTRACTOR SHALL BE RESPONSIBLE FOR MEETING ALL OF THE REQUIREMENTS ESTABLISHED FOR SAFE TRENCHING. (SEE OSHA AND UOSHA REQUIREMENTS, LATEST EDITIONS).

3. CONTRACTOR SHALL LOCATE ALL UNDERGROUND UTILITIES BEFORE LAYING PIPE WITHIN 200 FEET OF SAID UTILITIES WHICH MAY BE EXPOSED, DAMAGED OR CROSSED AS SHOWN ON THE DRAWINGS OR AS "BLUE STAKED". THE CONTRACTOR WILL MAKE ARRANGEMENTS WITH THE UTILITY COMPANY TO MOVE THE UTILITY IF NECESSARY OR OBTAIN PERMISSION FROM THE PROJECT ENGINEER TO MODIFY GRADES OF PROJECT LINES IN ORDER TO GO AROUND EXISTING UTILITIES.

4. SEWER MAINS, WATER MAINS, GAS MAINS AND OTHER UTILITIES ARE NOT SHOWN ON THE TANK DETAIL PLANS. REFER TO SITE/UTILITY PLANS (BY OTHERS). THE CONTRACTOR SHALL DETERMINE THE ACTUAL LOCATION OF EXISTING SERVICE CONNECTIONS AND UTILITIES, VERIFY THE HORIZONTAL AND VERTICAL LOCATIONS AND TAKE THE NECESSARY STEPS TO AVOID THEM.

5. SPECIFIC INFORMATION PROVIDED IN THE CONTRACT DOCUMENTS SHALL SUPERSEDE ITEMS COVERED IN THESE DRAWINGS.

CALL BEFORE YOU DIG.
IT'S FREE &
IT'S THE LAW.

(TOLL-FREE)
1-800-662-4111
208-2100
(SALT LAKE METRO)

205 WEST 700 SOUTH, SUITE 101
SALT LAKE CITY, UTAH 84101

CAUTION NOTICE TO CONTRACTOR

THE CONTRACTOR IS SPECIFICALLY CAUTIONED THAT THE LOCATION AND/OR ELEVATION OF EXISTING UTILITIES AS SHOWN ON THESE PLANS ARE BASED ON RECORDS OF THE VARIOUS UTILITY COMPANIES AND, WHERE POSSIBLE, MEASUREMENTS TAKEN IN THE FIELD. THE INFORMATION IS NOT TO BE RELIED ON AS BEING EXACT OR COMPLETE. THE CONTRACTOR MUST CALL THE APPROPRIATE UTILITY COMPANY AT LEAST 48 HOURS BEFORE ANY EXCAVATION TO REQUEST EXACT FIELD LOCATION OF UTILITIES. IT SHALL BE THE RESPONSIBILITY OF THE CONTRACTOR TO RELOCATE ALL EXISTING UTILITIES WHICH CONFLICT WITH THE PROPOSED IMPROVEMENTS SHOWN ON THE PLANS.

THE CONTRACTOR AGREES THAT HE SHALL ASSUME SOLE AND COMPLETE RESPONSIBILITY FOR JOB SITE CONDITIONS DURING THE COURSE OF CONSTRUCTION OF THIS PROJECT, INCLUDING SAFETY OF ALL PERSONS AND PROPERTY; THAT THIS REQUIREMENT SHALL APPLY CONTINUOUSLY AND NOT BE LIMITED TO THE NORMAL WORKING HOURS; AND THE CONTRACTOR SHALL DEFEND, INDEMNIFY, AND HOLD THE OWNER AND THE ENGINEER HARMLESS FROM ANY AND ALL LIABILITY, REAL OR ALLEGED, IN CONNECTION WITH THE PERFORMANCE OF WORK ON THIS PROJECT, EXCEPTING FOR LIABILITY ARISING FROM SOLE NEGLIGENCE OF THE OWNER OR THE ENGINEER.

FOR BID
03-10-2021

GILSON ENGINEERING
Consulting Engineers & Surveyors
(3340) SOUTH 400 EAST BUILDING C, UNIT 2, DRAPER, UT 84020
PHONE: (801) 571-3414 FAX: (801) 571-3449

LICENSED PROFESSIONAL ENGINEER
03/10/21
No. 4939906-2202
James J. Milligan
STATE OF UTAH

APPROVED FOR CULINARY WATER USE
COVER APPROVED BY DISTRICT

REVISIONS

REV	DATE	BY	COMMENTS

1" SCALE MEASURES 1" ON FULL SIZE SHEET
ADJUST FOR HALF SIZE SHEETS
0 1"

DATE: MARCH 2021
DRAWING NAME: G.101 INDEX AND LEGEND
DESIGNED/DRAWN BY: JM/BP
CHECKED: ---
APPROVED: ---

INDEX AND LEGEND

350,000 GALLON CULINARY WATER TANK
POWDER MOUNTAIN WATER & SEWER IMPROVEMENT DISTRICT
WEBER COUNTY, UTAH

REVISION:

PROJ. # **POW.010**

G.101

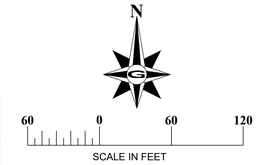

NOTE:
TOPOGRAPHY SHOWN IS GENERATED FROM LIDAR DATA FOR THE SITE AND IS FOR REFERENCE ONLY.
A DETAILED SITE GRADING PLAN WILL BE PROVIDED UPON COMPLETION OF FIELD SURVEY.

DISCLAIMER NOTE

UTILITY LOCATIONS SHOWN HEREON ARE APPROXIMATE ONLY. IT SHALL BE THE CONTRACTOR'S RESPONSIBILITY TO DETERMINE THE EXACT HORIZONTAL AND VERTICAL LOCATION OF ALL EXISTING UNDERGROUND AND OVERHEAD UTILITIES PRIOR TO COMMENCING CONSTRUCTION. NO REPRESENTATION IS MADE THAT ALL EXISTING UTILITIES ARE SHOWN HEREON. THE ENGINEER ASSUMES NO RESPONSIBILITY FOR UTILITIES NOT SHOWN OR UTILITIES NOT SHOWN IN THEIR PROPER LOCATION.

CALL BEFORE YOU DIG.
IT'S FREE &
IT'S THE LAW.
(TOLL-FREE)
1-800-662-4111
208-2100
(SALT LAKE METRO)
205 WEST 700 SOUTH, SUITE 101
SALT LAKE CITY, UTAH 84101

GILSON ENGINEERING
Consulting Engineers & Surveyors
12401 SOUTH 450 EAST BUILDING C, UNIT 2, DRAPER, UT 84020
PHONE: (801) 571-9414 FAX: (801) 571-9449

LICENSED PROFESSIONAL ENGINEER
03/10/21
No. 4939908-2202
James J. Milligan
STATE OF UTAH

POWDER MOUNTAIN WATER AND SEWER IMPROVEMENT DISTRICT

REVISIONS

REV	DATE	BY	COMMENTS

1" SCALE MEASURES 1" ON FULL SIZE SHEET
ADJUST FOR HALF SIZE SHEETS

DATE: MARCH 2021
DRAWING NAME: C.101 EXISTING SITE
DESIGNED/DRAWN BY: JM/BP
CHECKED: ---
APPROVED: ---

EXISTING SITE PLAN

350,000 GALLON CULINARY WATER TANK
POWDER MOUNTAIN WATER & SEWER IMPROVEMENT DISTRICT
WEBER COUNTY, UTAH

REVISION:

PROJ. #POW.010

C.101

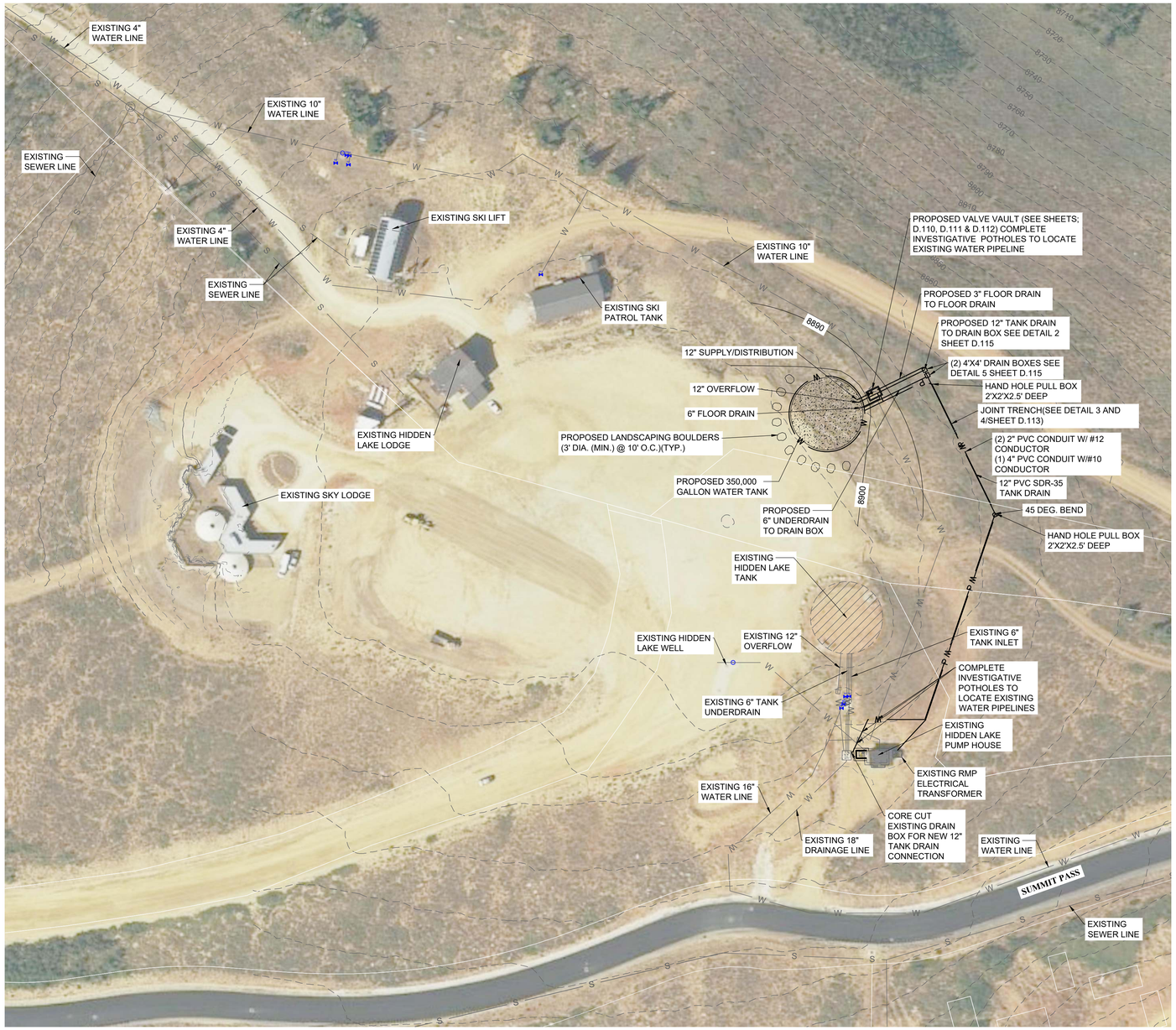

N

60 0 60 120

SCALE IN FEET

NOTE:
TOPOGRAPHY SHOWN IS GENERATED FROM LIDAR DATA FOR THE SITE AND IS FOR REFERENCE ONLY.
A DETAILED SITE GRADING PLAN WILL BE PROVIDED UPON COMPLETION OF FIELD SURVEY.

DISCLAIMER NOTE

UTILITY LOCATIONS SHOWN HEREON ARE APPROXIMATE ONLY. IT SHALL BE THE CONTRACTOR'S RESPONSIBILITY TO DETERMINE THE EXACT HORIZONTAL AND VERTICAL LOCATION OF ALL EXISTING UNDERGROUND AND OVERHEAD UTILITIES PRIOR TO COMMENCING CONSTRUCTION. NO REPRESENTATION IS MADE THAT ALL EXISTING UTILITIES ARE SHOWN HEREON. THE ENGINEER ASSUMES NO RESPONSIBILITY FOR UTILITIES NOT SHOWN OR UTILITIES NOT SHOWN IN THEIR PROPER LOCATION.

CALL BEFORE YOU DIG. IT'S FREE & IT'S THE LAW.
UTELINES
1-800-662-4111
208-2100
NON-T LINES NOTIFICAL
200 WEST 700 SOUTH, SUITE 101
SALT LAKE CITY, UTAH 84101

GLEN SON ENGINEERING
Consulting Engineers & Surveyors
12401 SOUTH 450 EAST, BUILDING C, UNIT 2, DRAPER, UT 84020
PHONE: (801) 571-9414 FAX: (801) 571-9449

LICENSED PROFESSIONAL ENGINEER
03/10/21
NO. 4939908-2202
James J. Milligan
STATE OF UTAH

POWDER MOUNTAIN WATER AND SEWER IMPROVEMENT DISTRICT

REVISIONS

REV	DATE	BY	COMMENTS

1" SCALE MEASURES 1" ON FULL SIZE SHEET
ADJUST FOR HALF SIZE SHEETS
0 1"

DATE: MARCH 2021
DRAWING NAME: C.102 PROPOSED SITE / YARD PIPING PLAN
DESIGNED/DRAWN BY: JM/BP
CHECKED: ---
APPROVED: ---

PROPOSED SITE / YARD PIPING PLAN

350,000 GALLON CULINARY WATER TANK
POWDER MOUNTAIN WATER & SEWER IMPROVEMENT DISTRICT
WEBER COUNTY, UTAH

REVISION:

PROJ. #POW.010

C.102

GENERAL STRUCTURAL NOTES:

1. THE CONTRACTOR MAY PLACE FLOOR AND ROOF CONCRETE IN (4) PLACEMENTS EACH, WITH CONSTRUCTION JOINTS AS SHOWN. THE ENGINEER MAY ALLOW (2) PLACEMENTS OR A SINGLE MONOLITHIC PLACEMENT IF THE CONTRACTOR CAN DEMONSTRATE IT, HAS THE EQUIPMENT AND PERSONNEL TO PLACE THE CONCRETE WITHIN THE TIME ALLOWANCES.
2. CONCRETE AND REINFORCEMENT PROCEDURE TO COMPLY WITH AMERICAN CONCRETE INSTITUTE BUILDING CODE REQUIREMENTS FOR REINFORCED CONCRETE (ACI 318-LATEST EDITION), ACI 350, ACI 301 AND OTHER APPLICABLE STANDARDS).
3. COMPRESSIVE STRENGTH OF CONCRETE TO BE 4000 PSI (MINIMUM).
4. MINIMUM TENSILE STRENGTH OF STEEL TO BE 60,000 PSI (ALLOWABLE STRESS=18,000 PSI).
5. CHAMFER (3/4") ALL EXPOSED CONCRETE EDGES.
6. SPLICES TO BE STAGGERED AS DIRECTED BY CODE AND THE ENGINEER.
7. MINIMUM SPLICE LAP TO BE 24" OR AS SPECIFIED.

fc = 4000 PSI
fy = 60,000 PSI

FOOTING SCHEDULE

DESIGN SOIL BEARING PRESSURE
2000 PSF

MARK	WIDTH	LENGTH	THICK	CROSSWISE REINFORCEMENT				LENGTHWISE REINFORCEMENT				NOTES
				NO.	SIZE	LENGTH	SPACING	NO.	SIZE	LENGTH	SPACING	
F-1	8'	8'	16"	9	#5	7'-6"	11-3/16"	9	#5	7'-6"	11-3/16"	EVENLY SPACED E/W
F-2	6'	CONT.	16"	CONT.	#6	5'-6"	12"	7	#5	CONT.	11"	EVENLY SPACED
F-3	--	--	--	--	--	--	--	--	--	--	--	SEE DETAIL 1/D.105

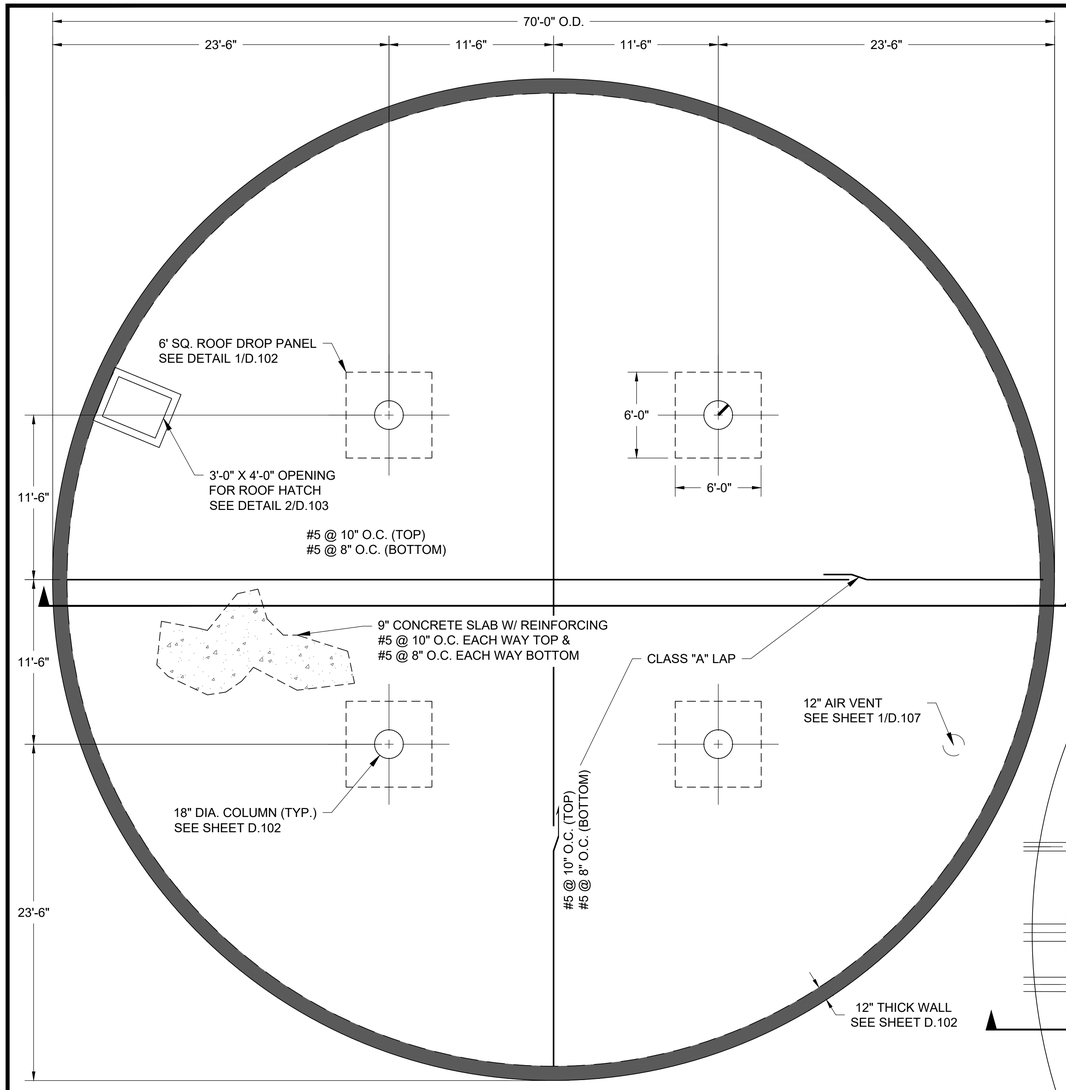

TANK ROOFING PLAN
SCALE: 1" = 5'
1 D.101

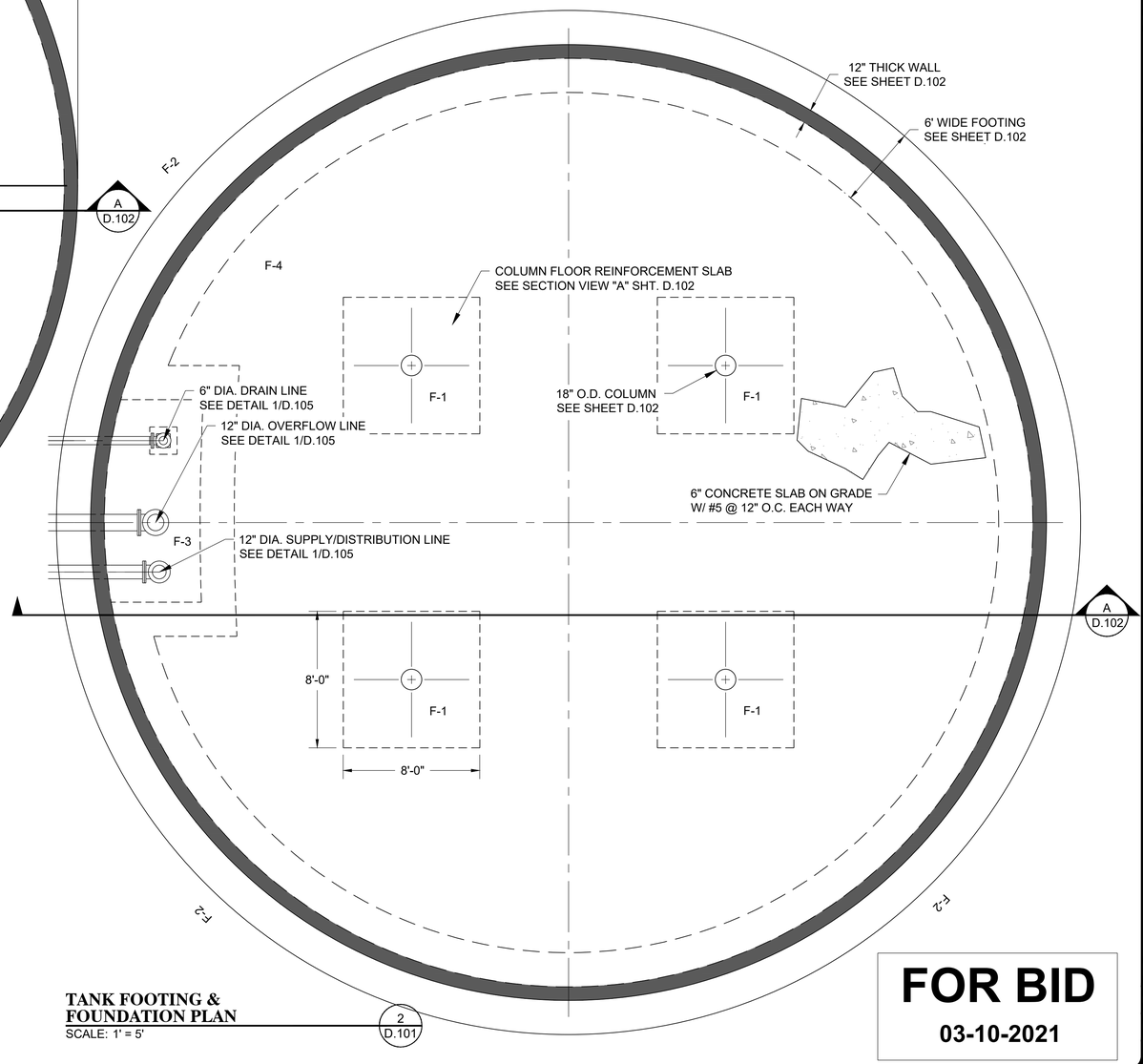

TANK FOOTING & FOUNDATION PLAN
SCALE: 1' = 5'
2 D.101

FOR BID
03-10-2021

GILSON ENGINEERING
Consulting Engineers & Surveyors
(340) SOUTH 450 EAST BUILDING C, UNIT 2, DRAPER, UT 84020
PHONE: (801) 571-5414 FAX: (801) 571-5449

LICENSED PROFESSIONAL ENGINEER
03/10/21
No. 4939908-2202
James J. Milligan
STATE OF UTAH

POWDER MOUNTAIN WATER AND SEWER IMPROVEMENT DISTRICT

REVISIONS

REV	DATE	BY	COMMENTS

1" SCALE MEASURES 1" ON FULL SIZE SHEET
ADJUST FOR HALF SIZE SHEETS

DATE: MARCH 2021
DRAWING NAME: D.101 ROOFING & FOOTING PLAN
DESIGNED/DRAWN BY: JM/BP
CHECKED: ---
APPROVED: ---

TANK ROOF & FOOTING PLAN

350,000 GALLON CULINARY WATER TANK
POWDER MOUNTAIN WATER & SEWER IMPROVEMENT DISTRICT
WEBER COUNTY, UTAH

REVISION:
PROJ. # POW.010
D.101

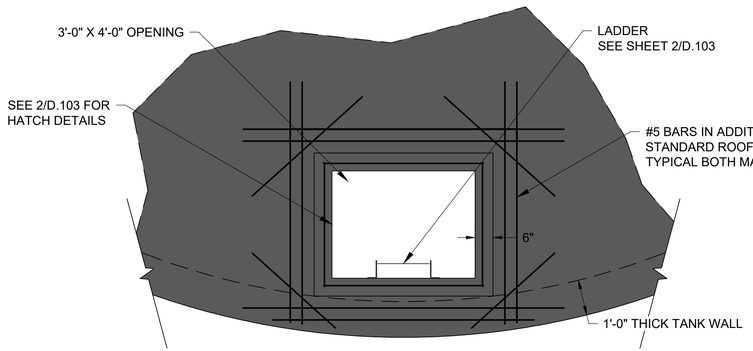

REINFORCING HATCH OPENING
SCALE: 1/2" = 1'
1 / D.102

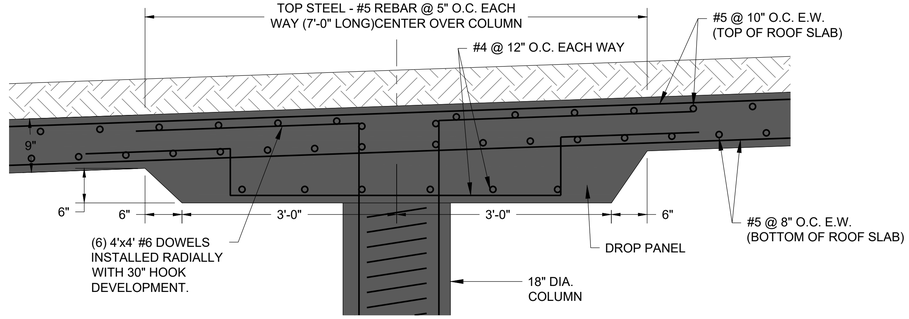

6' SQUARE ROOF DROP PANEL DETAIL
SCALE: 1" = 1'
2 / D.102

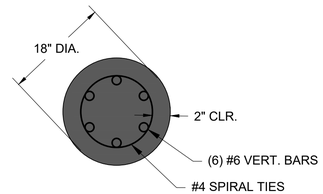

TANK COLUMN SECTION VIEW "B"
SCALE: 1" = 1'
B / D.102

DEVELOPMENT LENGTHS
#6 BARS 24 INCHES
#5 BARS 18 INCHES
#4 BARS 14.5 INCHES

FOR BID
03-10-2021

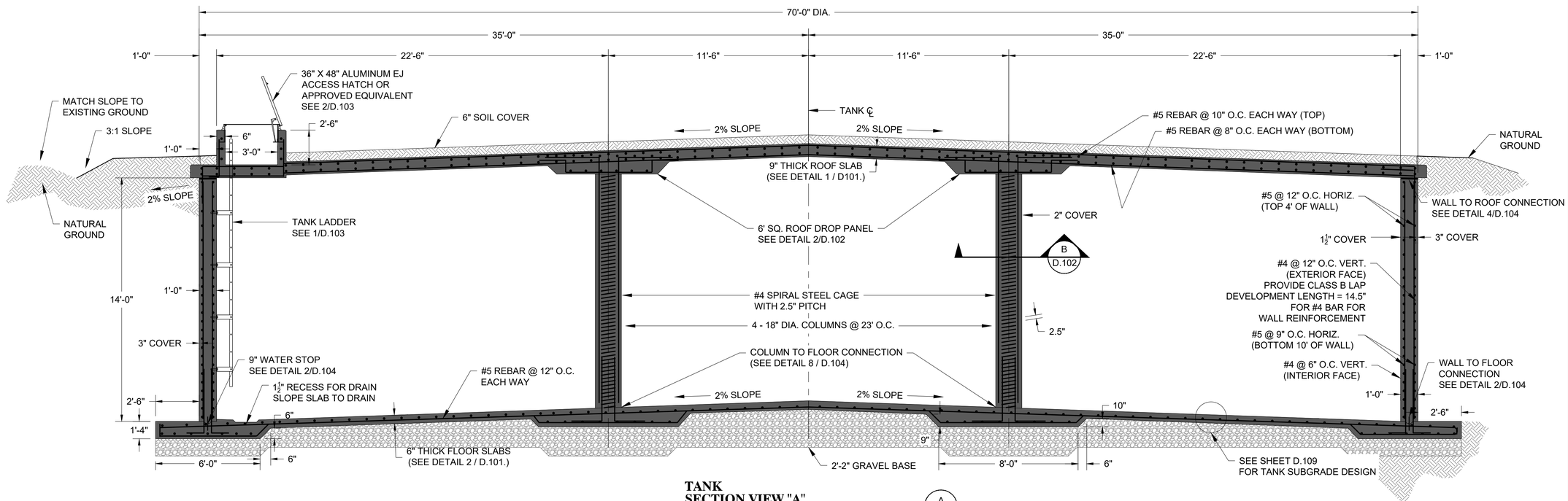

TANK SECTION VIEW "A"
SCALE: 1" = 3'
A / D.102

NOTE: ALL STEEL AND CONNECTION HARDWARE SHALL BE GALVANIZED OR STAINLESS STEEL

CLEARSON ENGINEERING
Consulting Engineers & Surveyors
12401 SOUTH 450 EAST, BUILDING C, UNIT 2, DRAPER, UT 84020
PHONE: (801) 571-9414 FAX: (801) 571-9449

LICENSED PROFESSIONAL ENGINEER
03/10/21
NO. 493909-2202
James J. Milligan
STATE OF UTAH

POWDER MOUNTAIN WATER AND SEWER IMPROVEMENT DISTRICT

REVISIONS
REV | DATE | BY | COMMENTS

1" SCALE MEASURES 1" ON FULL SIZE SHEET
ADJUST FOR HALF SIZE SHEETS

DATE: MARCH 2021
DRAWING NAME: TANK SECTION VIEW & DETAILS
DESIGNED/DRAWN BY: JM/BP
CHECKED: ---
APPROVED: ---

TANK SECTION VIEW & DETAILS

350,000 GALLON CULINARY WATER TANK
POWDER MOUNTAIN WATER & SEWER IMPROVEMENT DISTRICT
WEBER COUNTY, UTAH

REVISION:
PROJ. # POW.010
D.102

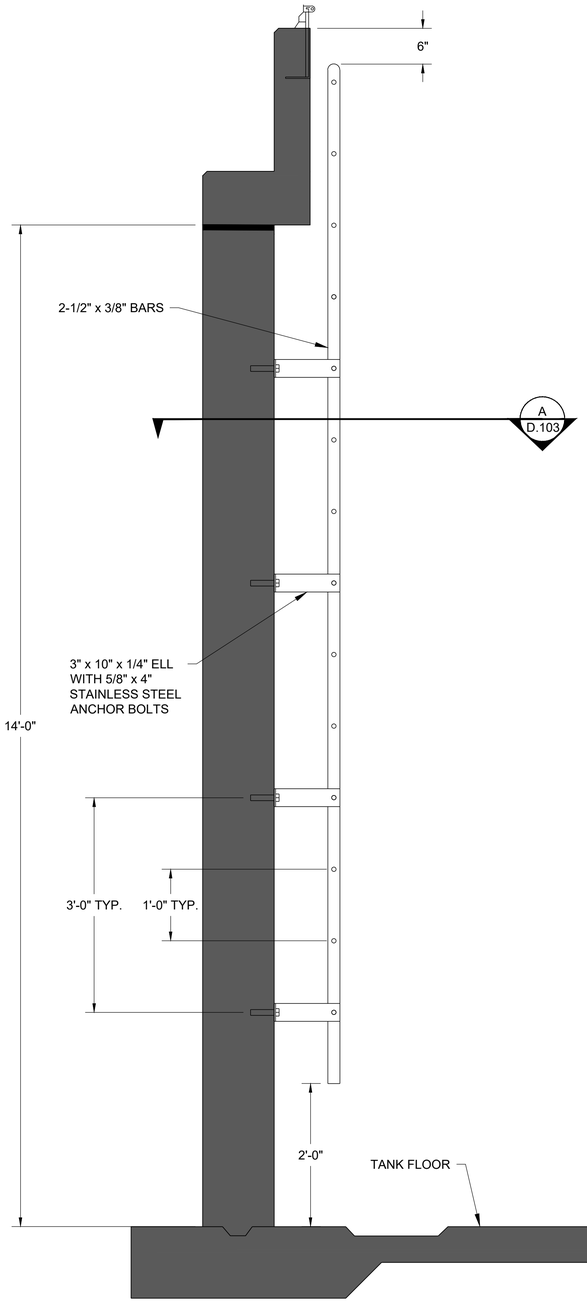

TANK LADDER DETAIL
SCALE: 1" = 1'
1 D.103

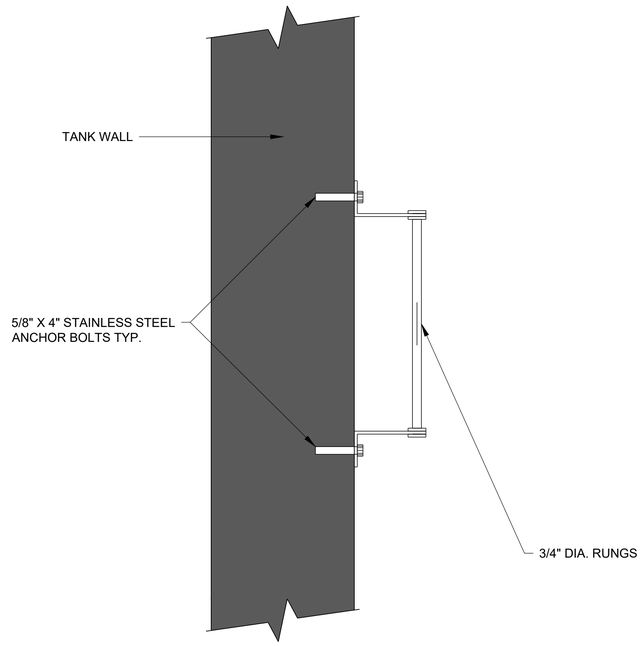

TANK LADDER SECTION
SCALE: 2" = 1'
3 D.103

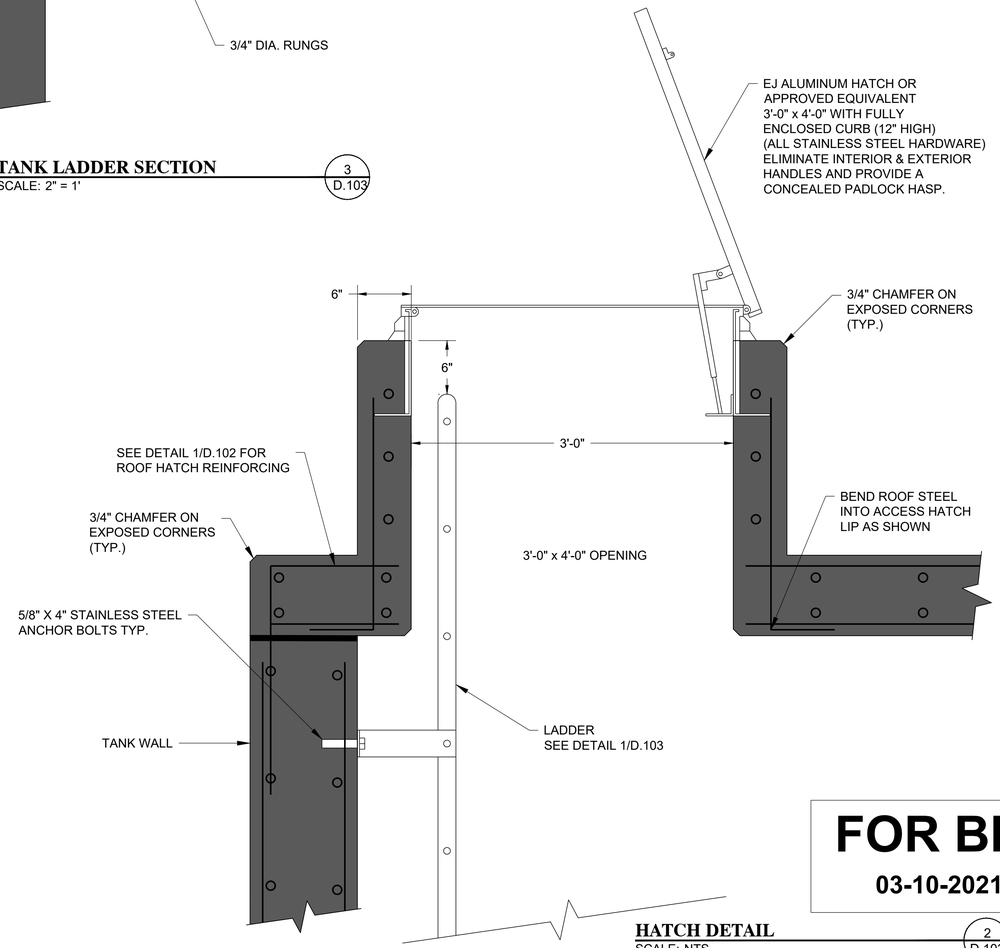

HATCH DETAIL
SCALE: NTS
2 D.103

FOR BID
03-10-2021

GILSON ENGINEERING
Consulting Engineers & Surveyors
(340) SOUTH 450 EAST BUILDING C, UNIT 2, DRAPER, UT 84020
PHONE: (801) 571-3414 FAX: (801) 571-3449

LICENSED PROFESSIONAL ENGINEER
03/10/21
NO. 4939908-2202
James J Milligan
STATE OF UTAH

POWDER MOUNTAIN WATER AND SEWER IMPROVEMENT DISTRICT

REVISIONS
REV | DATE | BY | COMMENTS

1" SCALE MEASURES 1" ON FULL SIZE SHEET
ADJUST FOR HALF SIZE SHEETS

DATE: MARCH 2021
DRAWING NAME: TANK LADDER DETAILS
DESIGNED/DRAWN BY: JM/BP
CHECKED: ---
APPROVED: ---

TANK LADDER DETAILS

350,000 GALLON CULINARY WATER TANK
POWDER MOUNTAIN WATER & SEWER IMPROVEMENT DISTRICT
WEBER COUNTY, UTAH

REVISION:
PROJ. # **POW.010**
D.103

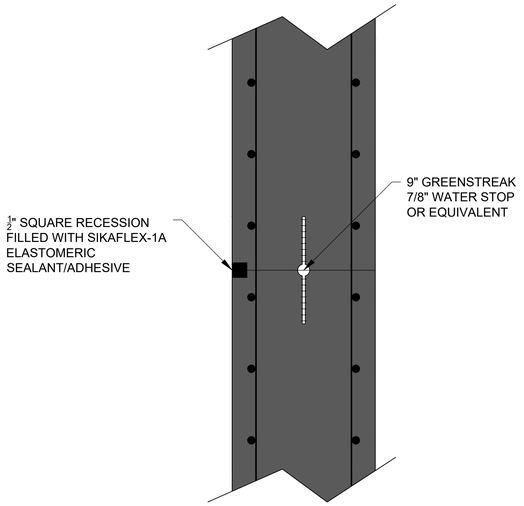

WALL CONSTRUCTION JOINT DETAIL
SCALE: NTS — 1 / D.104

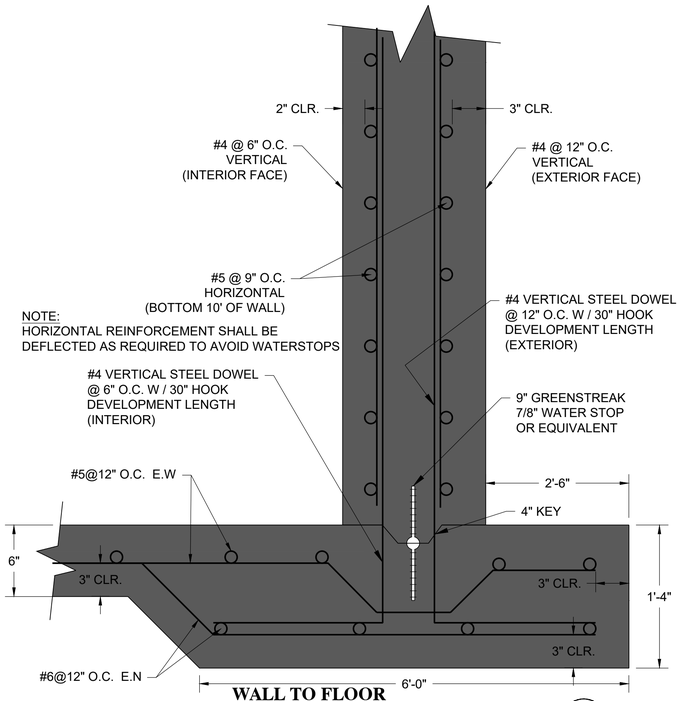

WALL TO FLOOR CONNECTION DETAIL
SCALE: NTS — 2 / D.104

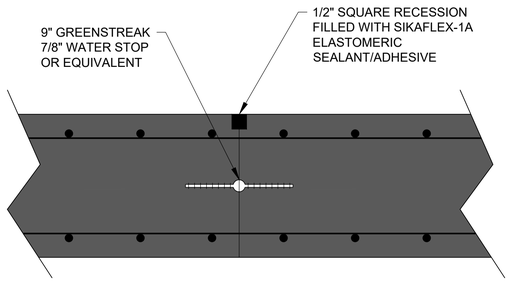

FLOOR CONSTRUCTION JOINT DETAIL
SCALE: NTS — 5 / D.104

DEVELOPMENT LENGTHS
#6 BARS 24 INCHES
#5 BARS 18 INCHES
#4 BARS 14.5 INCHES

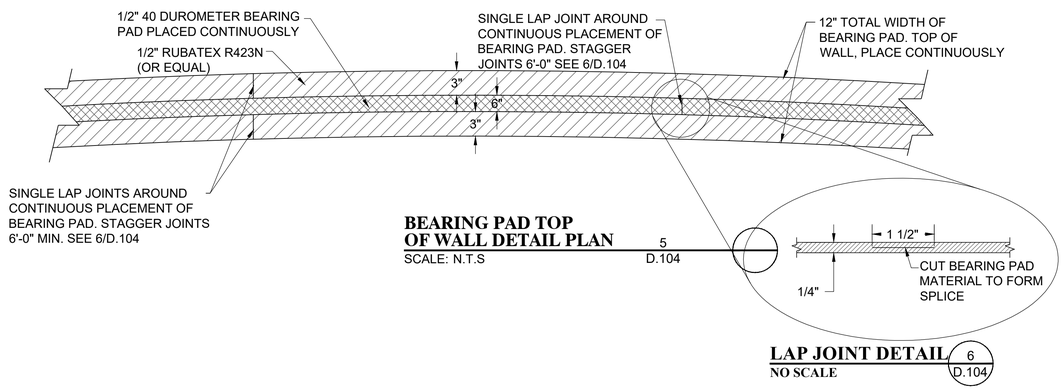

BEARING PAD TOP OF WALL DETAIL PLAN
SCALE: N.T.S — 5 / D.104

LAP JOINT DETAIL
NO SCALE — 6 / D.104

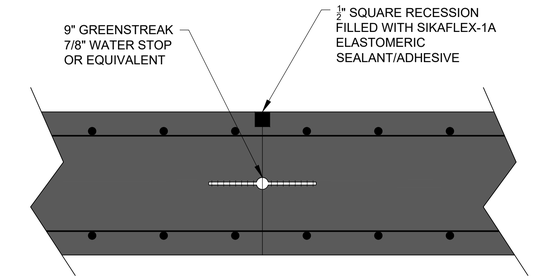

ROOF CONSTRUCTION JOINT DETAIL
SCALE: NTS — 3 / D.104

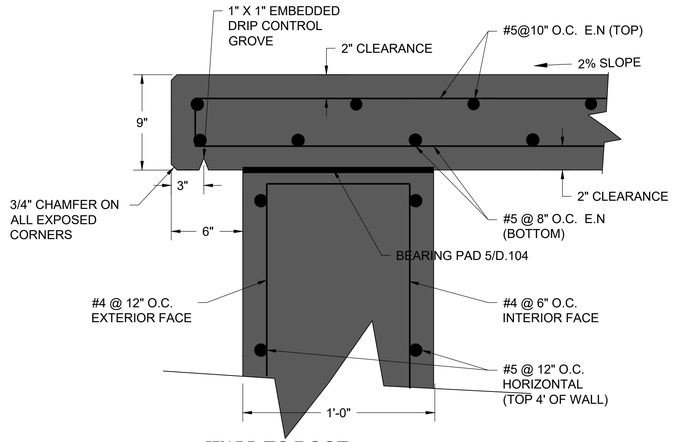

WALL TO ROOF CONNECTION DETAIL
SCALE: N.T.S — 4 / D.104

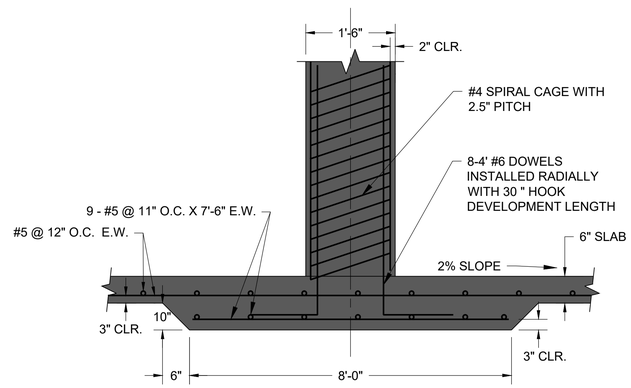

COLUMN TO FLOOR CONNECTION DETAIL
SCALE: NTS — 7 / D.104

FOR BID
03-10-2021

GILSON ENGINEERING
Consulting Engineers & Surveyors
(340) SOUTH 450 EAST BUILDING C, UNIT 2, DRAPER, UT 84020
PHONE: (801) 571-3414 FAX: (801) 571-3449

LICENSED PROFESSIONAL ENGINEER
03/10/21
NO. 4939908-2202
James J. Milligan
STATE OF UTAH

POWDER MOUNTAIN WATER AND SEWER IMPROVEMENT DISTRICT

REV / DATE | BY | COMMENTS | REVISIONS

1" SCALE MEASURES 1" ON FULL SIZE SHEET
ADJUST FOR HALF SIZE SHEETS

DATE: MARCH 2021
DRAWING NAME: 3D MODEL CONSTRUCTION JOINTS
DESIGNED/DRAWN BY: JM/BP
CHECKED: ---
APPROVED: ---

TANK CONNECTION DETAILS
350,000 GALLON CULINARY WATER TANK
POWDER MOUNTAIN WATER & SEWER IMPROVEMENT DISTRICT
WEBER COUNTY, UTAH

REVISION:
PROJ. # **POW.010**
D.104

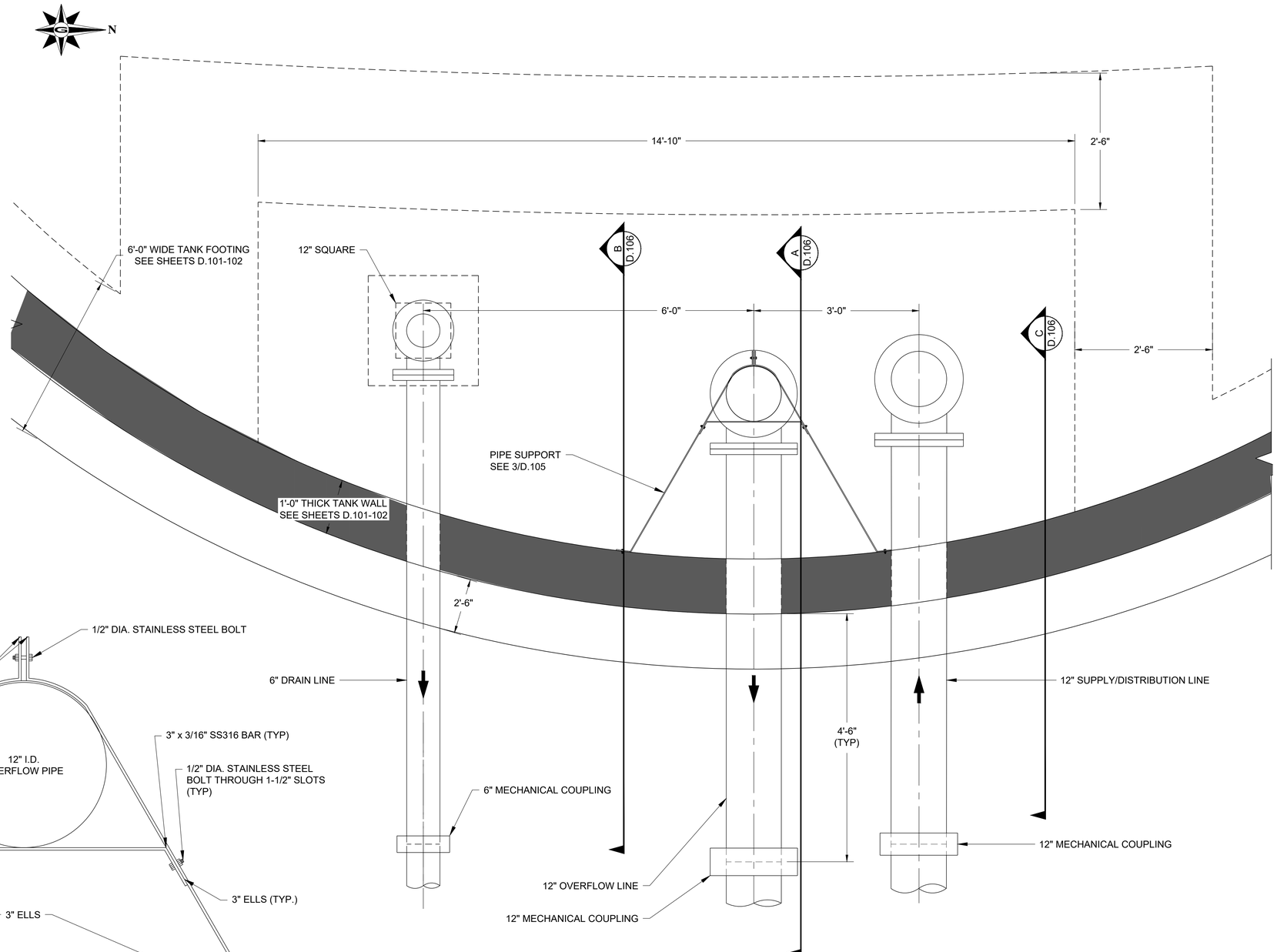

PIPING AND FOOTING PLAN VIEW
SCALE: 1" = 1'
1 / D.105

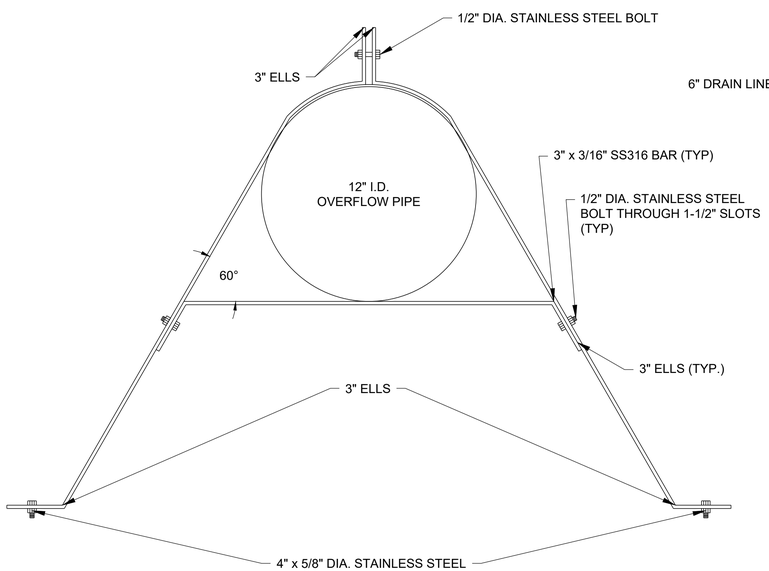

PIPE SUPPORT PLAN VIEW
SCALE: 1" = 4'
2 / D.105

FOR BID
03-10-2021

GILSON ENGINEERING
Consulting Engineers & Surveyors
(340) SOUTH 450 EAST BUILDING C, UNIT 2, DRAPER, UT 84020
PHONE: (801) 571-3414 FAX: (801) 571-3449

LICENSED PROFESSIONAL ENGINEER
03/10/21
NO. 4939908-2202
James J. Milligan
STATE OF UTAH

POWDER MOUNTAIN WATER AND SEWER IMPROVEMENT DISTRICT

REV	DATE	BY	COMMENTS
			REVISIONS

1" SCALE MEASURES 1" ON FULL SIZE SHEET
ADJUST FOR HALF SIZE SHEETS
0 1"

DATE: MARCH 2021
DRAWING NAME: D.105 PIPING DETAILS - PLAN VIEW
DESIGNED/DRAWN BY: JM/BP
CHECKED: ---
APPROVED: ---

TANK PIPING DETAILS - PLAN VIEW

350,000 GALLON CULINARY WATER TANK
POWDER MOUNTAIN WATER & SEWER IMPROVEMENT DISTRICT
WEBER COUNTY, UTAH

REVISION:
PROJ. # **POW.010**
D.105

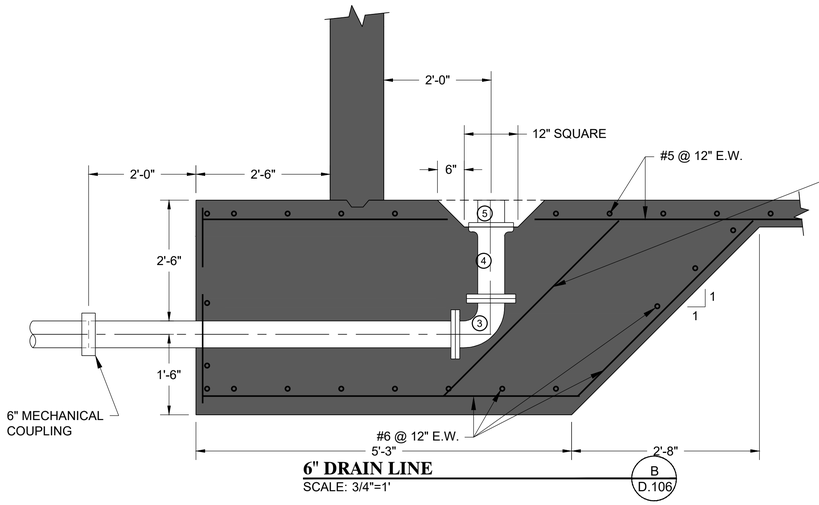

6" DRAIN LINE
SCALE: 3/4"=1'
B D.106

NOTE: REBAR IS TYPICAL AS SHOWN AROUND THICKENED FOOTINGS FOR PIPING LAYOUT

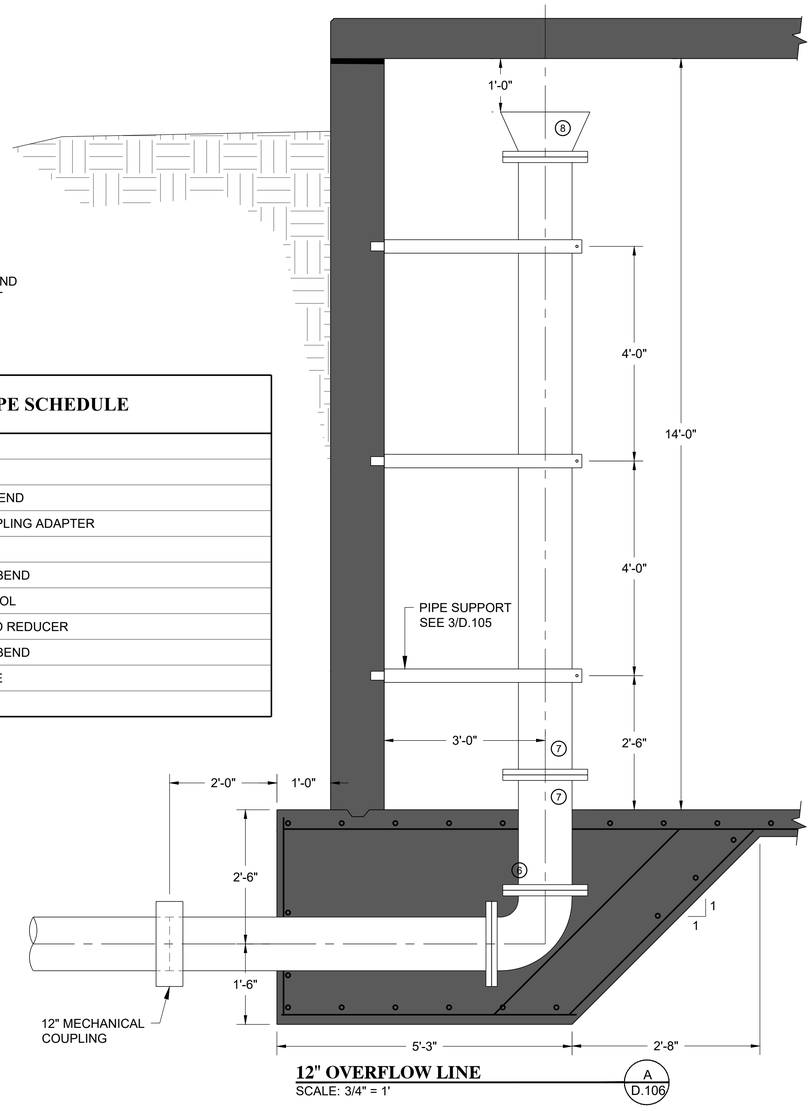

12" OVERFLOW LINE
SCALE: 3/4" = 1'
A D.106

PIPE SCHEDULE	
1	NOT USED
2	NOT USED
3	6" 90° FLANGED BEND
4	6" FLANGED COUPLING ADAPTER
5	6" STAND PIPE
6	12" FLANGED 90° BEND
7	12" FLANGED SPOOL
8	18" X 12" FLANGED REDUCER
9	12" FLANGED 90° BEND
10	12" F x PE D.I. PIPE

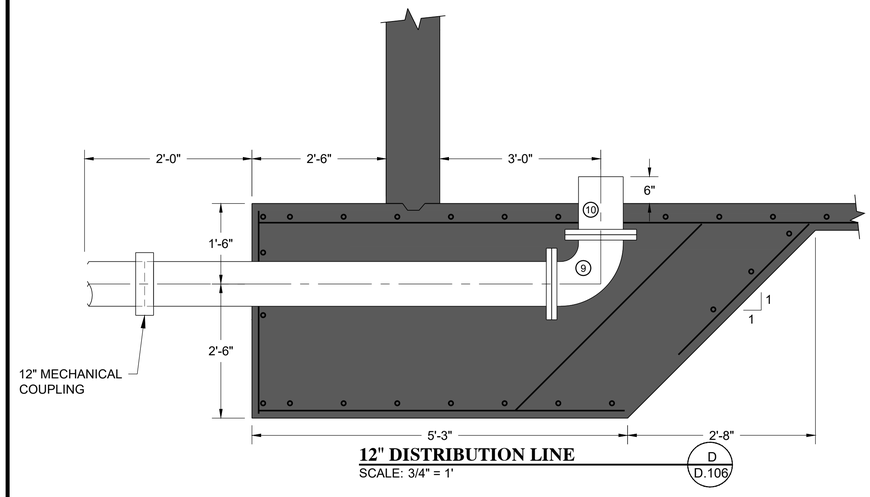

12" DISTRIBUTION LINE
SCALE: 3/4" = 1'
D D.106

NOTE:
ALL DUCTILE IRON PIPE AND FITTING ON INSIDE OF TANK SHALL BE COATED WITH 10 MIL. THICKNESS OF TNEMEC POT-A-POX SERIES 20 COLOR IS BL15 TANK WHITE, OR APPROVED EQUAL.
PREPARE SURFACES PRIOR TO COATING BY ABRASIVE SWEEP BLASTING

FOR BID
03-10-2021

GILSON ENGINEERING
Consulting Engineers & Surveyors
(340) SOUTH 450 EAST BUILDING C, UNIT 2, DRAPER, UT 84020
PHONE: (801) 571-3414 FAX: (801) 571-3449

LICENSED PROFESSIONAL ENGINEER
03/10/21
NO. 4939908-2202
James J Milligan
STATE OF UTAH

POWDER MOUNTAIN WATER AND SEWER IMPROVEMENT DISTRICT

REV./ DATE | BY | COMMENTS | REVISIONS

1" SCALE MEASURES 1" ON FULL SIZE SHEET
ADJUST FOR HALF SIZE SHEETS

DATE: MARCH 2021
DRAWING NAME: DETAILS - SECTION VIEW
DESIGNED/DRAWN BY: JM/BP
CHECKED: ---
APPROVED: ---

TANK PIPING DETAILS - SECTION VIEW
350,000 GALLON CULINARY WATER TANK
POWDER MOUNTAIN WATER & SEWER IMPROVEMENT DISTRICT
WEBER COUNTY, UTAH

REVISION:
PROJ. # **POW.010**
D.106

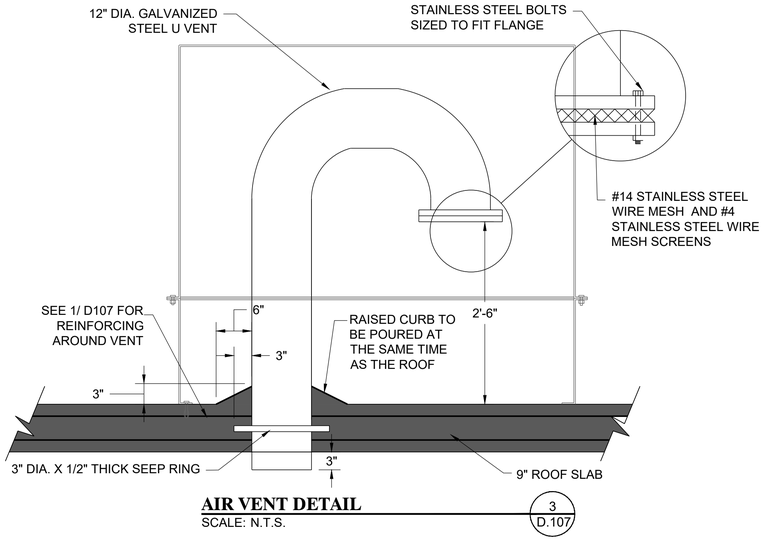

AIR VENT DETAIL
SCALE: N.T.S.
3 / D.107

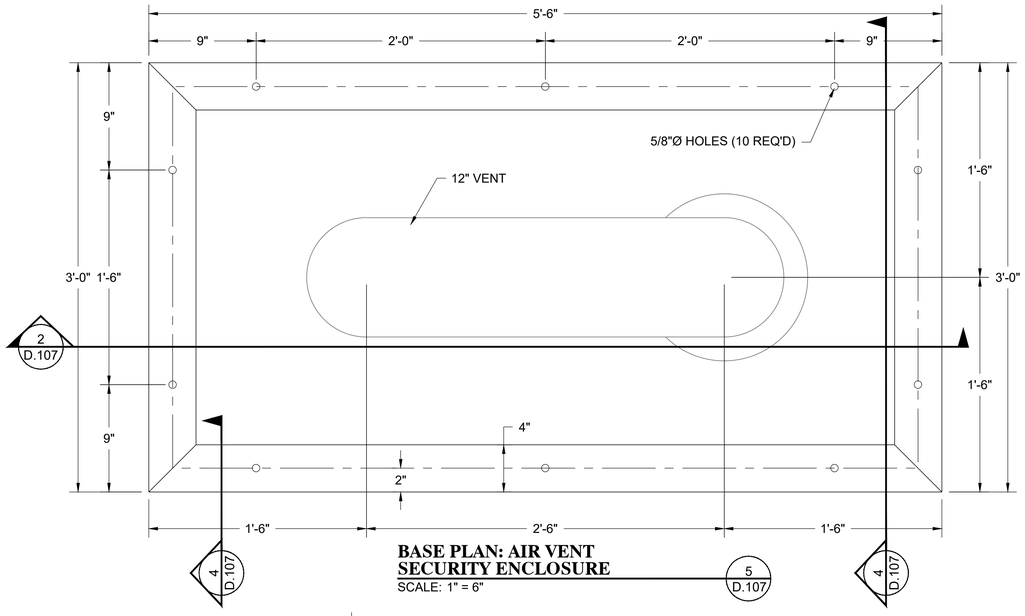

BASE PLAN: AIR VENT SECURITY ENCLOSURE
SCALE: 1" = 6"
5 / D.107

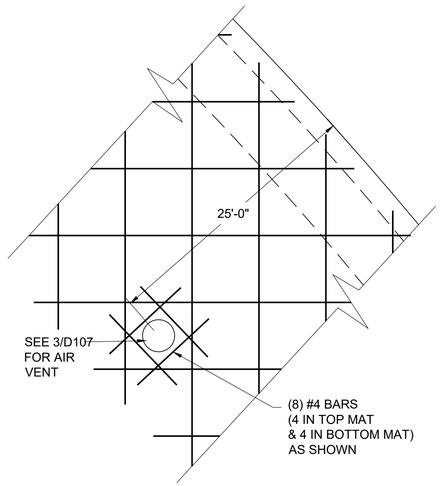

REINFORCING AT AIR VENT OPENING
SCALE: N.T.S.
1 / D.107

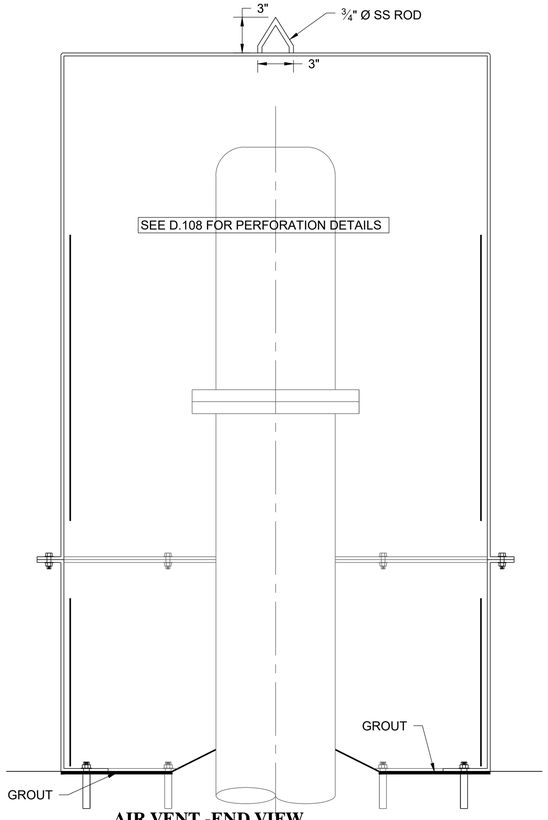

AIR VENT -END VIEW SECURITY ENCLOSURE
SCALE: 1"= 6"
4 / D.107

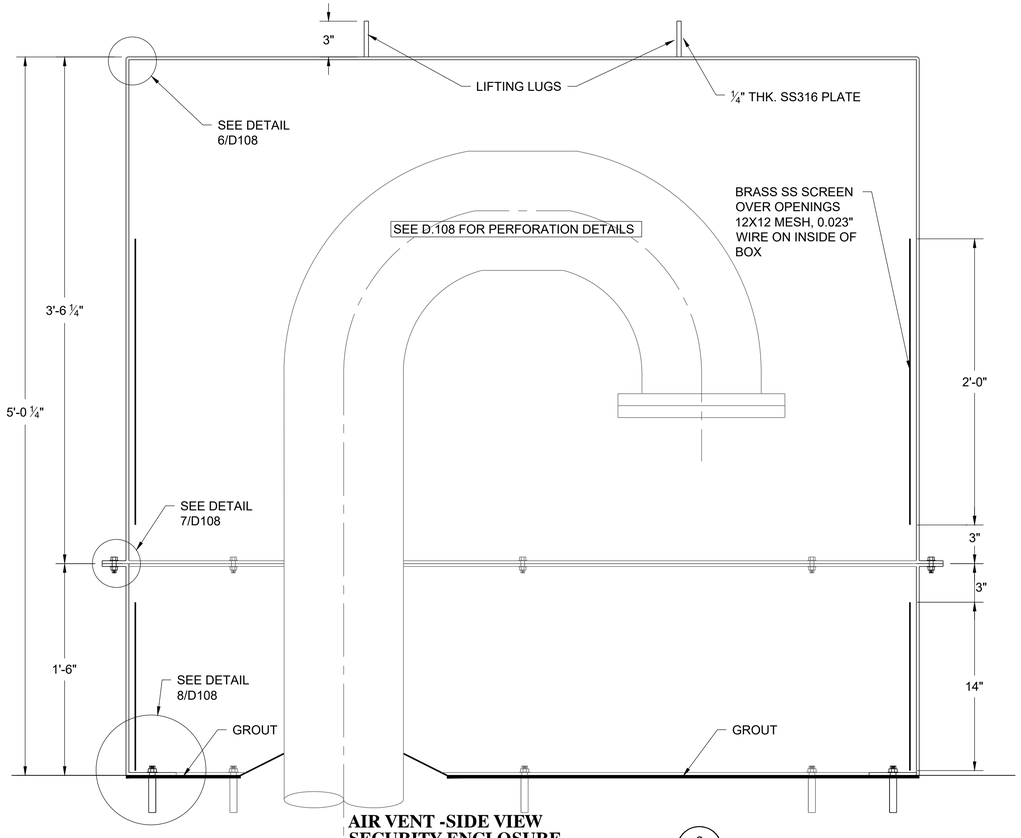

AIR VENT -SIDE VIEW SECURITY ENCLOSURE
SCALE: 1"= 6"
2 / D.107

FOR BID
03-10-2021

NOTE:
GROUT BETWEEN ENCLOSURE AND TOP OF CONCRETE SLAB

GILSON ENGINEERING
Consulting Engineers & Surveyors
(340) SOUTH 450 EAST BUILDING C, UNIT 2, DRAPER, UT 84020
PHONE: (801) 571-3414 FAX: (801) 571-3449

LICENSED PROFESSIONAL ENGINEER
03/10/21
NO. 4939908-2202
James J Milligan
STATE OF UTAH

POWDER MOUNTAIN WATER AND SEWER IMPROVEMENT DISTRICT

REVISIONS
REV / DATE | BY | COMMENTS

1" SCALE MEASURES 1" ON FULL SIZE SHEET
ADJUST FOR HALF SIZE SHEETS

DATE: MARCH 2021
DRAWING NAME: D.107 AIR VENT DETAILS - SECTION VIEW
DESIGNED/DRAWN BY: JM/BP
CHECKED: ---
APPROVED: ---

ROOF AIR VENT DETAILS - SECTION VIEW
350,000 GALLON CULINARY WATER TANK
POWDER MOUNTAIN WATER & SEWER IMPROVEMENT DISTRICT
WEBER COUNTY, UTAH

REVISION:
PROJ. # POW.010
D.107

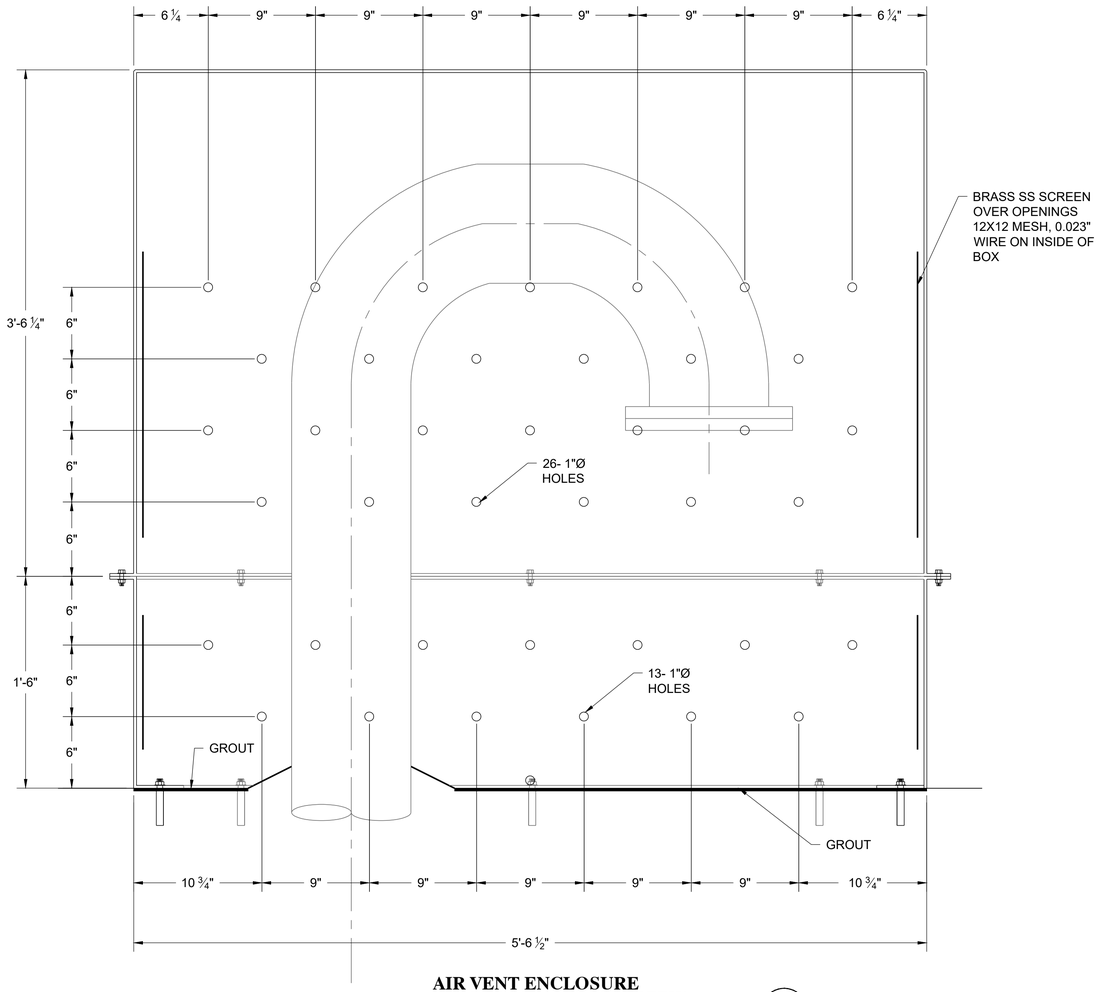

AIR VENT ENCLOSURE PERFORATIONS -SIDE VIEW (1 / D.108)
SCALE: 1"=1'

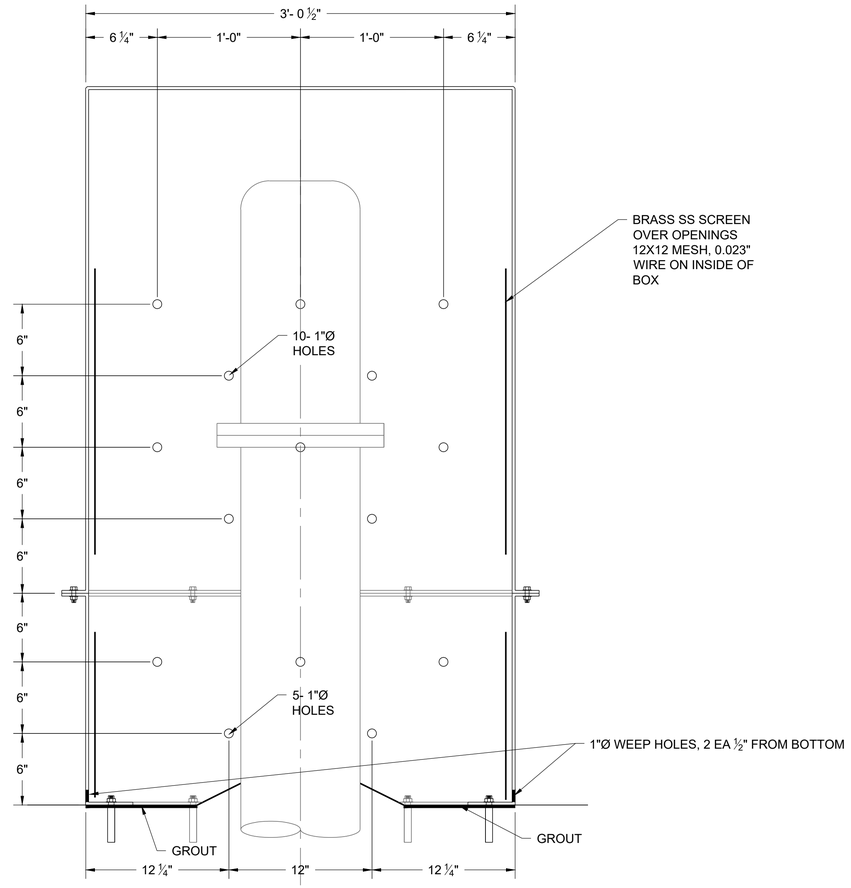

AIR VENT ENCLOSURE PERFORATIONS -END VIEW (2 / D.108)
SCALE: 1"=1'

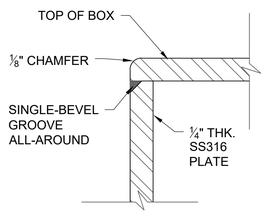

AIR VENT ENCLOSURE TOP CORNER (3 / D.108)
SCALE: 1"=1'

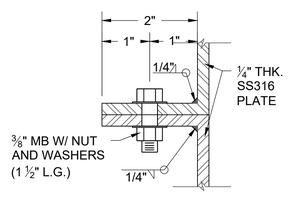

AIR VENT ENCLOSURE CONNECTION DETAIL (4 / D.108)
SCALE: 1"=1'

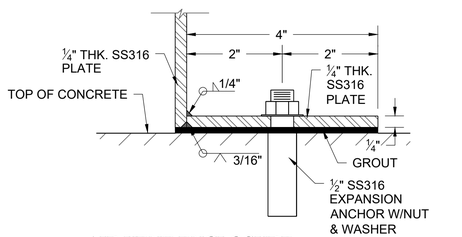

AIR VENT ENCLOSURE CONCRETE CONNECTION (5 / D.108)
SCALE: NTS

FOR BID
03-10-2021

GILSON ENGINEERING
Consulting Engineers & Surveyors
(340) SOUTH 450 EAST BUILDING C, UNIT 2, DRAPER, UT 84020
PHONE: (801) 571-3414 FAX: (801) 571-3449

LICENSED PROFESSIONAL ENGINEER
NO. 4939008-2202
03/10/21
James J Milligan
STATE OF UTAH

POWDER MOUNTAIN WATER AND SEWER IMPROVEMENT DISTRICT

REV / DATE | BY | COMMENTS | REVISIONS

1" SCALE MEASURES 1" ON FULL SIZE SHEET
ADJUST FOR HALF SIZE SHEETS
0

DATE: MARCH 2021
DRAWING NAME: AIR VENT ENCLOSURE DETAILS - SECTION VIEW
DESIGNED/DRAWN BY: JM/BP
CHECKED: ---
APPROVED: ---

AIR VENT ENCLOSURE DETAILS
SECTION VIEW
350,000 GALLON CULINARY WATER TANK
POWDER MOUNTAIN WATER & SEWER IMPROVEMENT DISTRICT
WEBER COUNTY, UTAH

REVISION:
PROJ. # **POW.010**
D.108

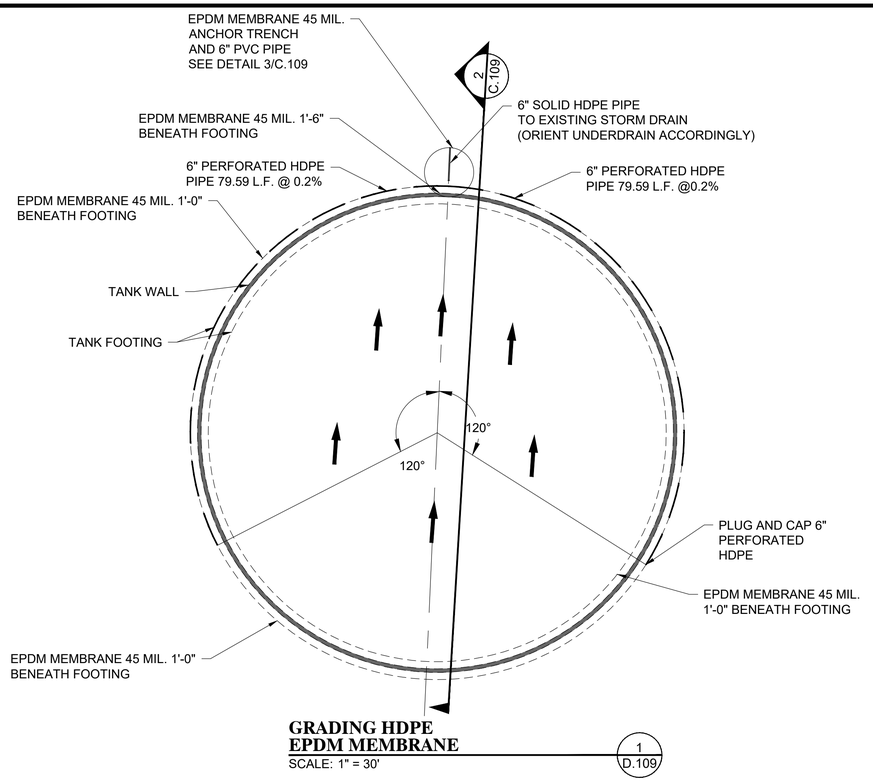

GRADING HDPE
EPDM MEMBRANE
SCALE: 1" = 30'
1
D.109

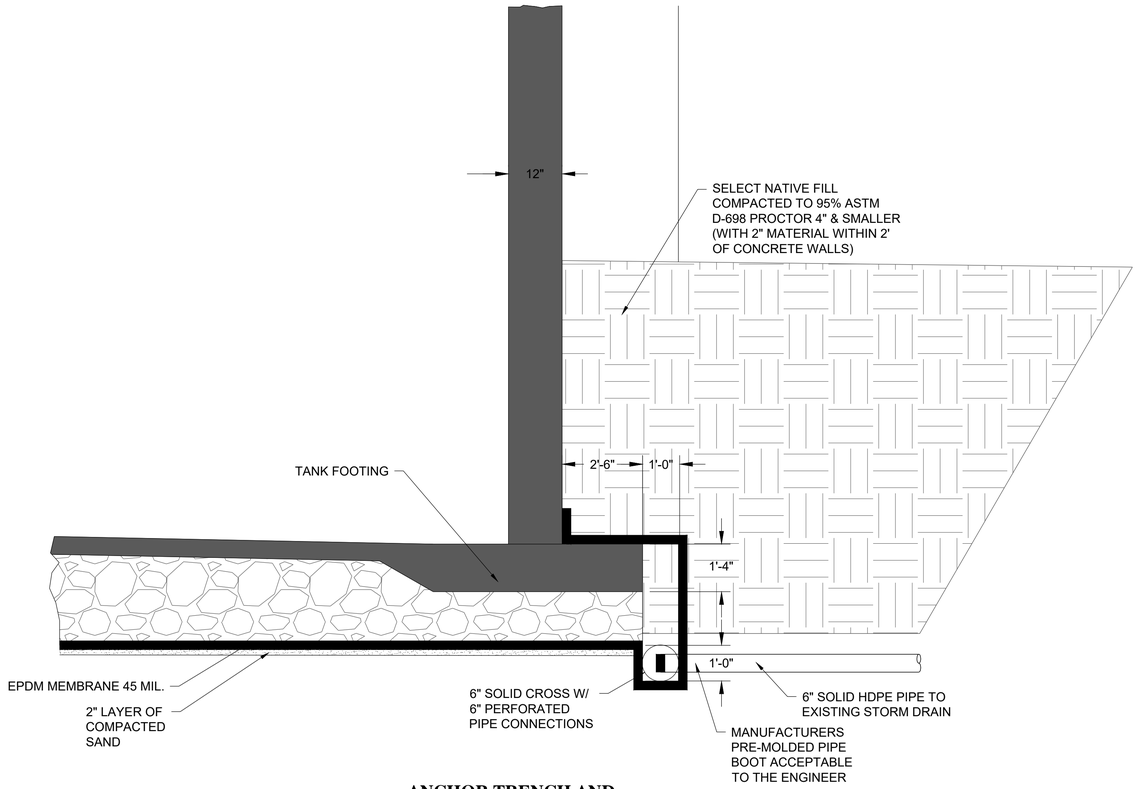

ANCHOR TRENCH AND
6" UNDERDRAIN
SCALE: 1" = 2'
3
D.109

NOTE:
EPDM MEMBRANE SHALL BE PONDGARD 45 MIL. OR
APPROVED EQUAL

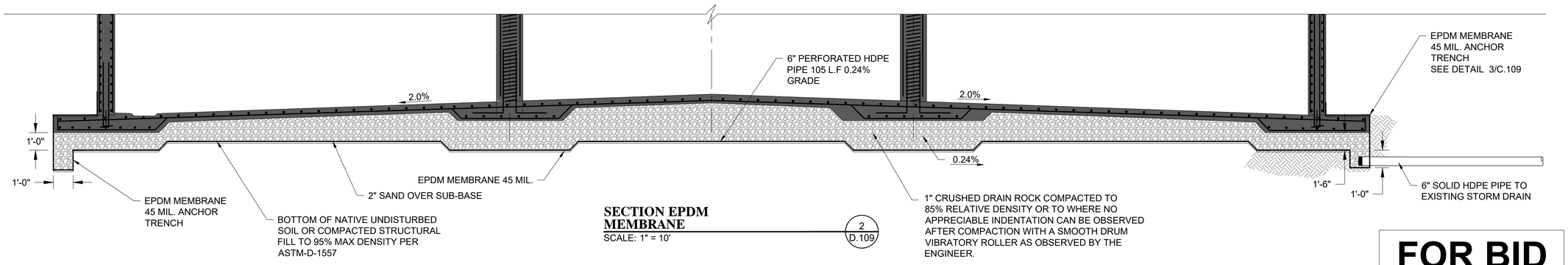

SECTION EPDM
MEMBRANE
SCALE: 1" = 10'
2
D.109

FOR BID
03-10-2021

GILSON ENGINEERING
Consulting Engineers & Surveyors
12401 SOUTH 450 EAST BUILDING C, UNIT 2, DRAPER, UT 84020
PHONE: (801) 571-5414 FAX: (801) 571-5449

LICENSED PROFESSIONAL ENGINEER
03/10/21
No. 4939908-2202
James J. Milligan
STATE OF UTAH

POWDER MOUNTAIN WATER AND SEWER IMPROVEMENT DISTRICT

REVISIONS

REV	DATE	BY	COMMENTS

1" SCALE MEASURES 1" ON FULL SIZE SHEET
ADJUST FOR HALF SIZE SHEETS

DATE: MARCH 2021
DRAWING NAME: D.106 TANK PIPING DETAILS - SECTION VIEW
DESIGNED/DRAWN BY: JM/BP
CHECKED: ---
APPROVED: ---

TANK UNDERDRAIN DETAILS - SECTION VIEW
350,000 GALLON CULINARY WATER TANK
POWDER MOUNTAIN WATER & SEWER IMPROVEMENT DISTRICT
WEBER COUNTY, UTAH

REVISION:
PROJ. # POW.010
D.109

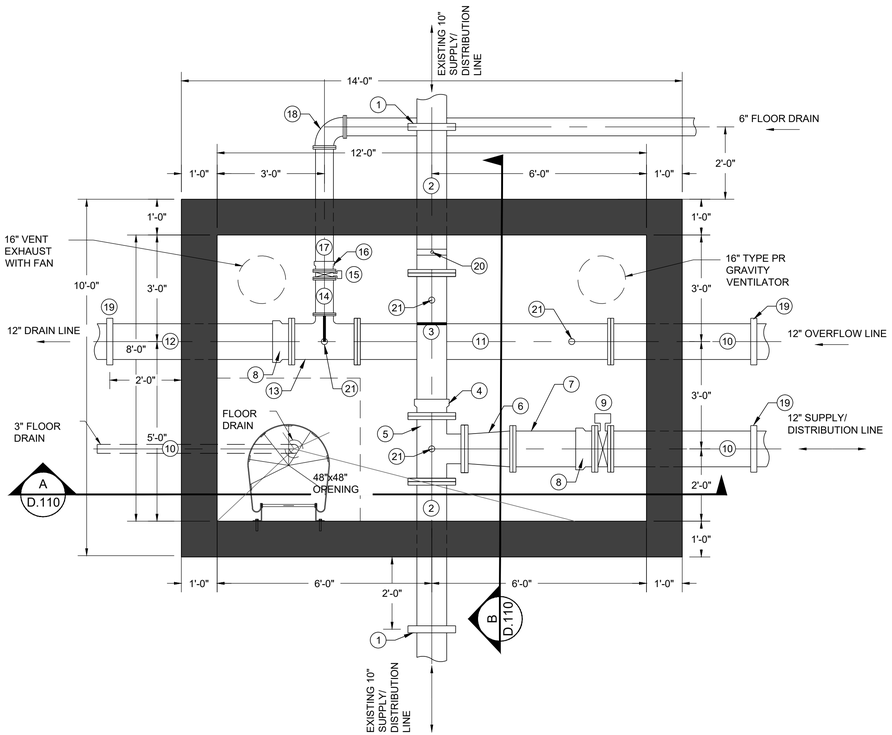

SUPPLY & DRAIN VALVE BOX: PLAN

SCALE: 1" = 2' — 1 / D.110

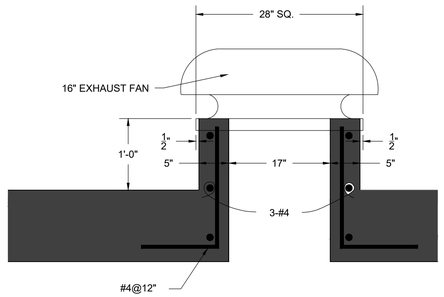

16" EXHAUST FAN

SCALE: 1" = '1 — 2 / D.110

LEGEND		
#	QTY.	DESCRIPTION
1	2	10" F x MJ SLEEVE : CONNECTION TO EXISTING 10" WATER PIPE
2	2	10" FLANGED SPOOL (4'-0" LONG) DI PIPE (CL 250)
3	1	10" FXPE DI PIPE (4'-0" LONG LESS COUPLING ADAPTER) (CL 250)
4	1	10" FLANGED COUPLING ADAPTER
5	1	10" x 10" x 10" FLANGED DI PIPE TEE (CL 250)
6	1	10" x 12" FLANGED DI PIPE REDUCER (CL 250)
7	1	12" FXPE DI PIPE (1'-0" LONG LESS COUPLING ADAPTER) (CL 250)
8	8	12" FLANGED COUPLING ADAPTER
9	9	12" BUTTERFLY VALVE
10	2	12" FLANGED SPOOL (4'-0" LONG) DI PIPE (CL 250)
11	1	12" FLANGED SPOOL (7'-0" LONG) DI PIPE (CL 250)
12	1	12" FXPE DI PIPE (5'-0" LONG LESS COUPLING ADAPTER) (CL 250)
13	1	12" x 6" x 12" FLANGED TEE
14	1	6" FLANGED SPOOL (1'-0" LONG)
15	1	6" GATE VALVE
16	1	6" FLANGED COUPLING ADAPTER
17	1	6" FXPE DI PIPE (3'-5.5" LONG LESS COUPLING ADAPTER) (CL 250)
18	1	6" FLANGED 90 DEGREE BEND
19	3	12" F x MJ SLEEVE : CONNECTION TO NEW 12" DI PIPE (CL 150)
20	1	2" COMBINATION AIR-VACUUM / RELIEF VALVE WITH BRONZE TAPPING SLEEVE, 2" VALVE AND RED BRASS PIPE AND FITTING
21	4	ADJUSTABLE FLANGE PIPE SUPPORT

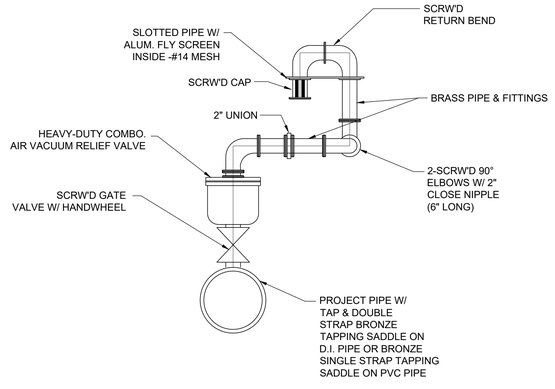

AIR VACUUM RELIEF VALVE

SCALE: N.T.S. — 4 / D.110

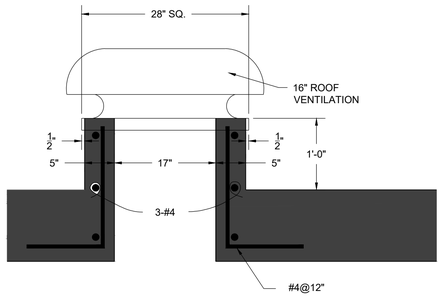

ROOF VENTILATOR DETAIL

SCALE: 1" = '1 — 3 / D.110

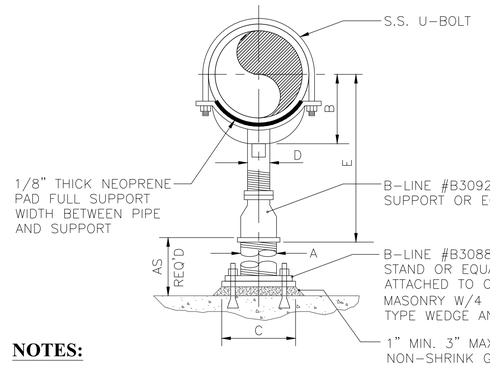

NOTES:

1. PROVIDE HALF ROUND RIGID INSULATION & INSULATION PROTECTION SHIELD, SIMILAR TO GRINNELL FIG.167 OR ELCEN FIG.219 WHEN PIPING IS INSULATED.
2. FOR BASE, HEIGHT, & FLANGE DIMENSIONS, SEE TABLE TO RIGHT. ALL DIMENSIONS IN INCHES.
3. ALL COMPONENTS OF PIPE SUPPORT SHALL BE STAINLESS STEEL.

PIPE SIZE	A	B	C	D	E MIN.	E MAX.
2½	2½	3½	9	1½	8	13
3	2½	3¾	9	1½	8¼	13¾
3½	2½	4	9	1½	8½	13½
4	3	4¼	9	2½	9¼	14
5	3	4⅞	9	2½	10	14¾
6	3	5½	9	2½	10½	15¼
8	3	6⅞	9	2½	11¾	16½
10	3	8½	9	2½	13½	18¾
12	3	9 15/16	9	2½	15	19¾
14	4	10 15/16	11	3	16¼	20¾
16	4	12⅜	11	3	17¾	22¼
18	6	13⅞	13½	3½	19½	24
20	6	15⅜	13½	3½	21	25½
24	6	17 15/16	13½	4	23¾	28¾

PIPE SUPPORT DETAIL

SCALE: N.T.S. — 5 / D.110

FOR BID
03-10-2021

GILSON ENGINEERING
Consulting Engineers & Surveyors
1140 SOUTH 400 EAST BUILDING C, UNIT 2, DRAPER, UT 84020
PHONE: (801) 571-3414 FAX: (801) 571-3449

LICENSED PROFESSIONAL ENGINEER
03/10/21
NO. 4939908-2202
James J. Milligan
STATE OF UTAH

POWDER MOUNTAIN WATER AND SEWER IMPROVEMENT DISTRICT

REVISIONS
REV | DATE | BY | COMMENTS

1" SCALE MEASURES 1" ON FULL SIZE SHEET
ADJUST FOR HALF SIZE SHEETS
0

DATE: MARCH 2021
DRAWING NAME: VAULT DETAILS
DESIGNED/DRAWN BY: JM/BP
CHECKED: ---
APPROVED: ---

VAULT DETAILS

350,000 GALLON CULINARY WATER TANK
POWDER MOUNTAIN WATER & SEWER IMPROVEMENT DISTRICT
WEBER COUNTY, UTAH

REVISION:
PROJ. # POW.010
D.110

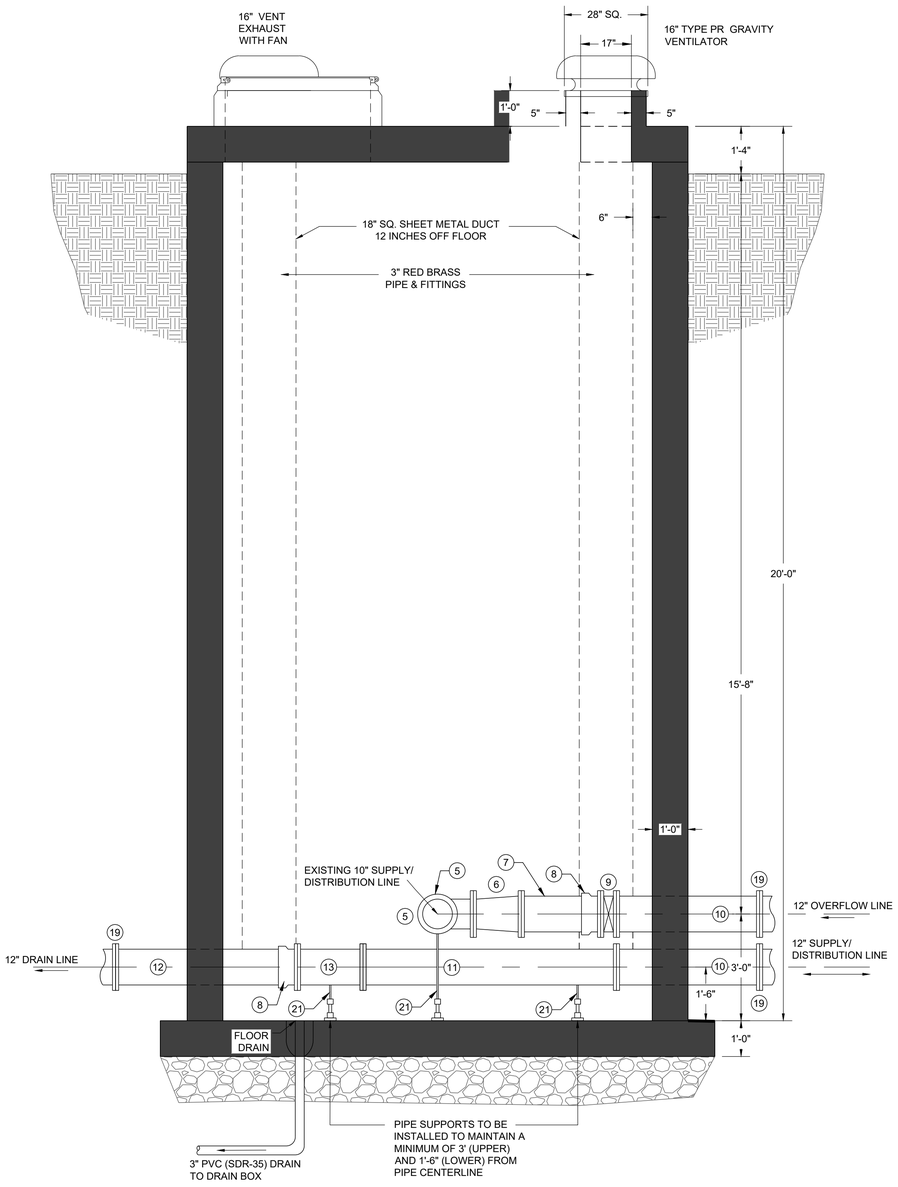

SUPPLY & DRAIN VALVE BOX: SECTION "A" (1 / D.111)
SCALE: N.T.S.

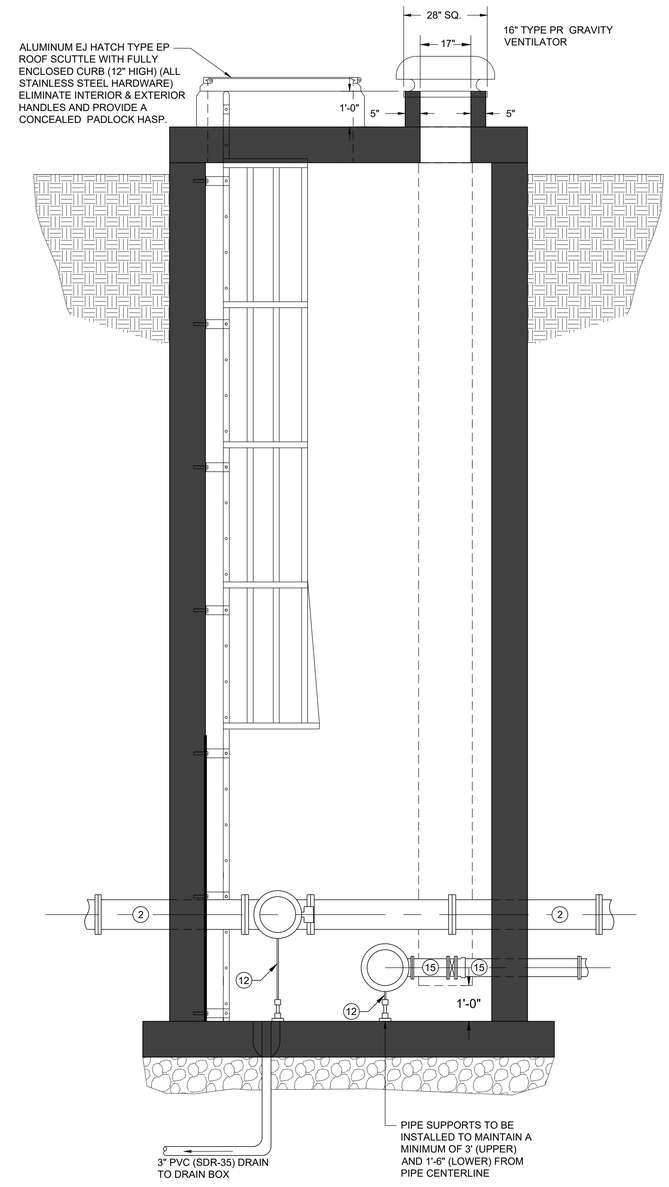

SUPPLY & DRAIN VALVE BOX: SECTION "B" (2 / D.111)
SCALE: 1" = 2'

FOR BID
03-10-2021

GILSON ENGINEERING
Consulting Engineers & Surveyors
13403 SOUTH 400 EAST BUILDING C, UNIT 2, DRAPER, UT 84020
PHONE: (801) 571-3414 FAX: (801) 571-3449

LICENSED PROFESSIONAL ENGINEER
03/10/21
NO. 4939908-2202
James J. Milligan
STATE OF UTAH

POWDER MOUNTAIN WATER AND SEWER IMPROVEMENT DISTRICT

REV | DATE | BY | COMMENTS | REVISIONS

1" SCALE MEASURES 1" ON FULL SIZE SHEET
ADJUST FOR HALF SIZE SHEETS

DATE: MARCH 2021
DRAWING NAME: VAULT DETAILS
DESIGNED/DRAWN BY: JM/BP
CHECKED: ---
APPROVED: ---

VAULT DETAILS

350,000 GALLON CULINARY WATER TANK
POWDER MOUNTAIN WATER & SEWER IMPROVEMENT DISTRICT
WEBER COUNTY, UTAH

REVISION:
PROJ. # POW.010
D.111

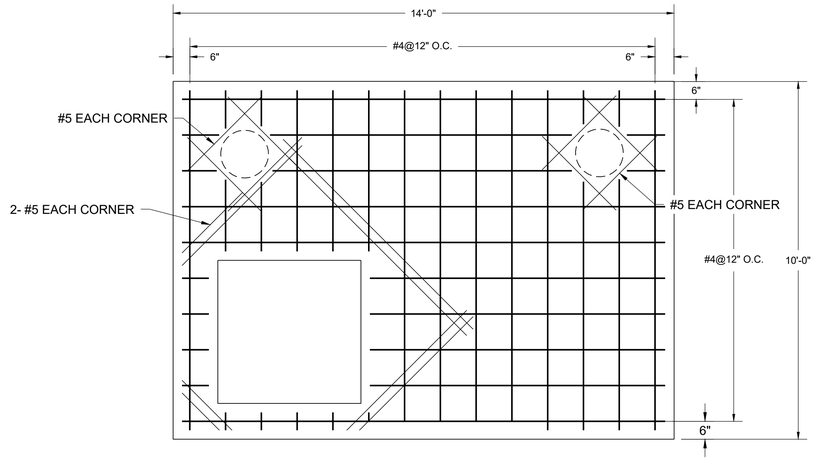

NOTE:
#4@12" EACH WAY TOP FACE

REBAR-ROOF BOTTOM FACE
SCALE: 1" = 1'
1 / D.112

NOTE:
INSTALL 2 ADDITIONAL #5 BARS ON NORTH & EAST SIDE OF 48" OPENING; AND 2 #5 BARS (6 FEET LONG), DIAGONALLY, AT SOUTH EAST CORNER OF OPENING.

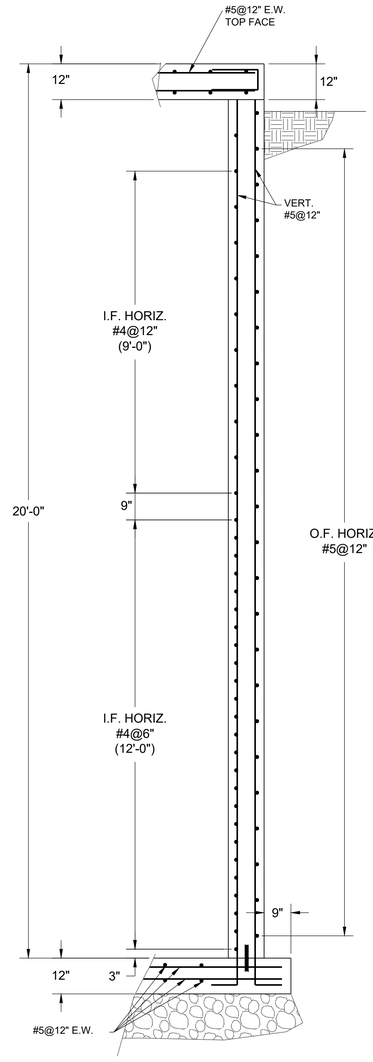

REBAR SECTION -10' SPAN
SCALE: 1"=2'
2 / D.112

GILSON ENGINEERING
Consulting Engineers & Surveyors
1360 SOUTH 450 EAST BUILDING C, UNIT 2, DRAPER, UT 84020
PHONE: (801) 571-5414 FAX: (801) 571-5443

LICENSED PROFESSIONAL ENGINEER
03/10/21
NO. 4939906-2202
James J. Milligan
STATE OF UTAH

POWDER MOUNTAIN WATER AND SEWER IMPROVEMENT DISTRICT

REV	DATE	BY	COMMENTS
			REVISIONS

1" SCALE MEASURES 1" ON FULL SIZE SHEET
ADJUST FOR HALF SIZE SHEETS
0 1"

DATE: MARCH 2021
DRAWING NAME: VAULT DETAILS
DESIGNED/DRAWN BY: JM/BP
CHECKED: ---
APPROVED: ---

VAULT DETAILS

350,000 GALLON CULINARY WATER TANK
POWDER MOUNTAIN WATER & SEWER IMPROVEMENT DISTRICT
WEBER COUNTY, UTAH

FOR BID
03-10-2021

REVISION:
PROJ. # **POW.010**
D.112

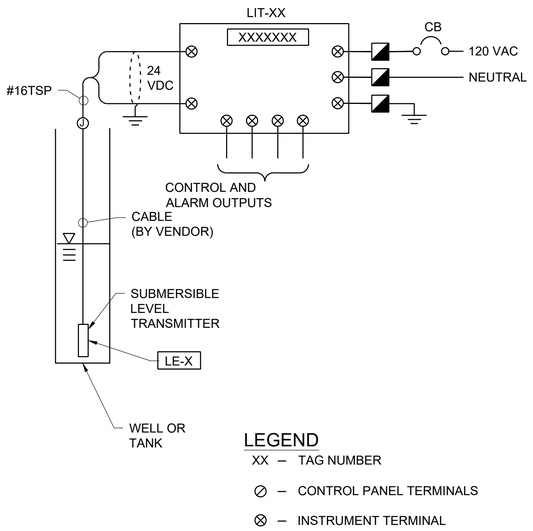

LEGEND

XX – TAG NUMBER

⊘ – CONTROL PANEL TERMINALS

⊗ – INSTRUMENT TERMINAL

TYPICAL LEVEL CONTROL SCHEMATIC FOR WELL OR TANK (1 / D.113)

SCALE: 1"=1'

NOTES

1. DO NOT USE MERCURY FLOAT SWITCHES.

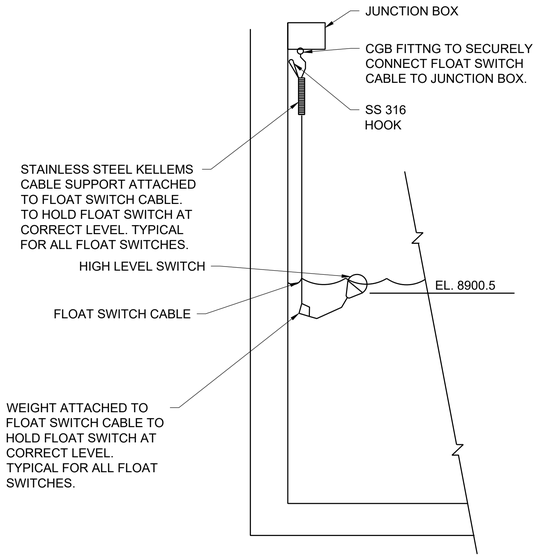

TYPICAL FLOAT LEVEL SWITCHES INSTALLATION DETAIL (2 / D.113)

SCALE: NTS

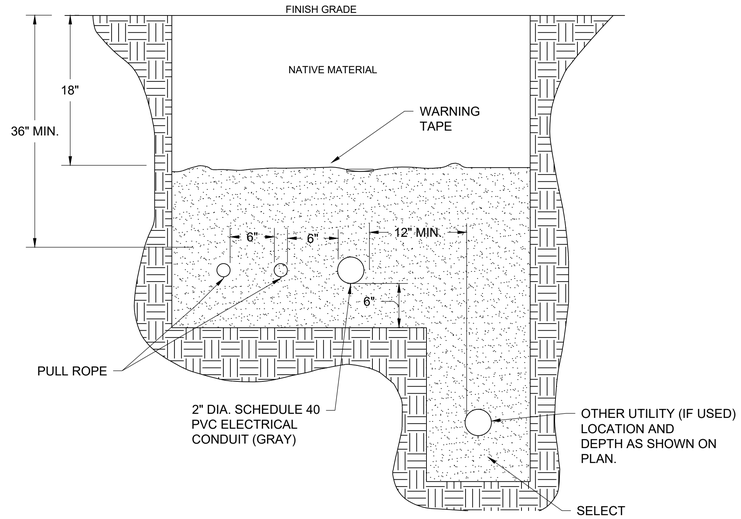

CONDUIT JOINT TRENCH DETAIL (3 / D.113)

SCALE: NTS

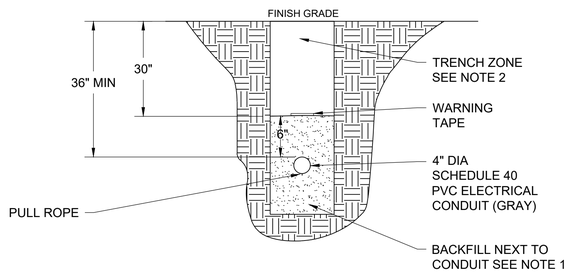

NOTES:

1. BACKFILL MATERIAL SHALL BE TYPE B, OR C COMPACTED TO 95% PER ASTM D 1557, SEE SPECIFICATION 31 23 00.
2. NATIVE MATERIAL MEETING SPECIFICATION 31 23 00 FOR SUITABLE MATERIAL MAY BE USED FOR TRENCH ZONE BACKFILL IN UNIMPROVED AREAS. COMPACT TO 85%.
3. FOR MORE THAN ONE CONDUIT IN TRENCH ALLOW 6" BETWEEN CONDUIT.

RMP CONDUIT TRENCH DETAIL (4 / D.113)

SCALE: NTS

FOR BID

03-10-2021

GILSON ENGINEERING
Consulting Engineers & Surveyors
(340) SOUTH 450 EAST BUILDING C, UNIT 2, DRAPER, UT 84020
PHONE: (801) 571-0414 FAX: (801) 571-0449

LICENSED PROFESSIONAL ENGINEER
03/10/21
NO. 4939908-2202
James J. Milligan
STATE OF UTAH

POWDER MOUNTAIN WATER AND SEWER IMPROVEMENT DISTRICT

REVISIONS

REV	DATE	BY	COMMENTS

1" SCALE MEASURES 1" ON FULL SIZE SHEET
ADJUST FOR HALF SIZE SHEETS

DATE: MARCH 2021
DRAWING NAME: TANK CONTROL DETAILS
DESIGNED/DRAWN BY: JM/BP
CHECKED: ---
APPROVED: ---

TANK CONTROL DETAILS

350,000 GALLON CULINARY WATER TANK
POWDER MOUNTAIN WATER & SEWER IMPROVEMENT DISTRICT
WEBER COUNTY, UTAH

REVISION:

PROJ. # POW.010

D.113

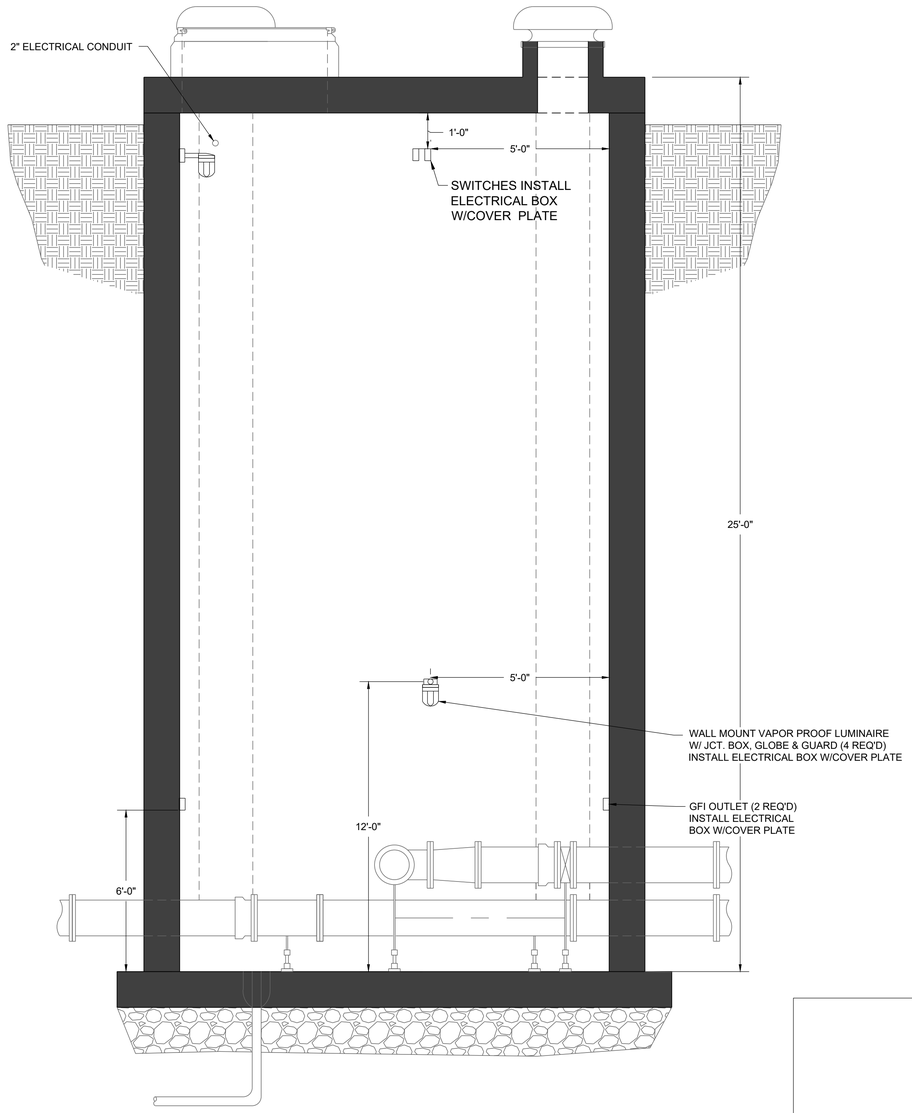

VAULT BOX
ELECTRICAL ELEVATION (1 / D.114)
SCALE: 1"=2'

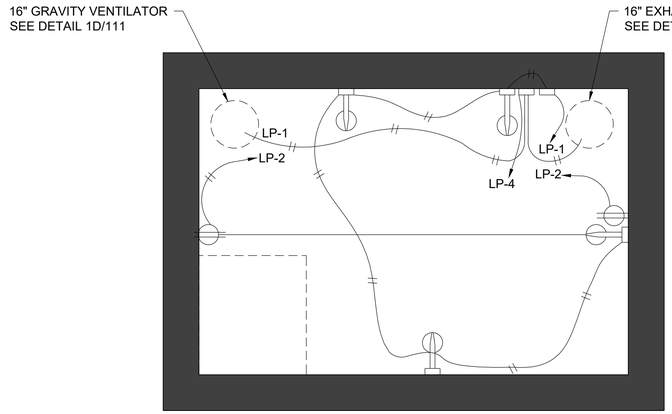

VAULT BOX
ELECTRICAL PLAN (2 / D.114)
SCALE: 1"=2'

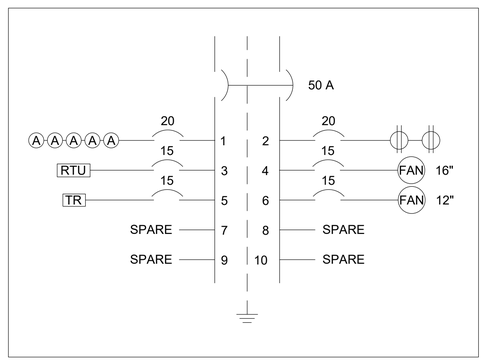

LOAD CENTER (4 / D.114)
SCALE: NONE

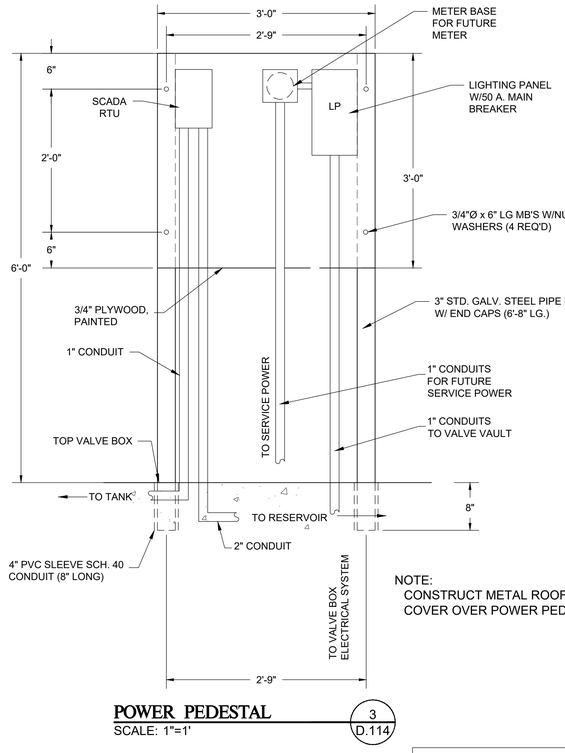

NOTE:
CONSTRUCT METAL ROOF
COVER OVER POWER PEDESTAL

POWER PEDESTAL (3 / D.114)
SCALE: 1"=1'

FOR BID
03-10-2021

GLEASON ENGINEERING
Consulting Engineers & Surveyors
12401 SOUTH 450 EAST, BUILDING C, UNIT 2, DRAPER, UT 84020
PHONE: (801) 571-9414 FAX: (801) 571-9449

LICENSED PROFESSIONAL ENGINEER
03/10/21
NO. 4939908-2202
James J. Milligan
STATE OF UTAH

POWDER MOUNTAIN WATER AND SEWER IMPROVEMENT DISTRICT

REVISIONS

REV	DATE	BY	COMMENTS

1" SCALE MEASURES 1" ON FULL SIZE SHEET
ADJUST FOR HALF SIZE SHEETS

DATE: MARCH 2021
DRAWING NAME: ELECTRICAL DETAILS
DESIGNED/DRAWN BY: JM/BP
CHECKED: ---
APPROVED: ---

ELECTRICAL DETAILS

350,000 GALLON CULINARY WATER TANK
POWDER MOUNTAIN WATER & SEWER IMPROVEMENT DISTRICT
WEBER COUNTY, UTAH

REVISION:
PROJ. # POW.010
D.114

VALID FOR 125 PCF SOIL DENSITY AND 2500 PSF (REAL LOAD), 3750 PSF (TOTAL LOAD) ALLOWABLE SOIL BEARING PRESSURE. CONFIRM ONSITE SOIL CONDITIONS WITH GEOTECHNICAL ENGINEERING

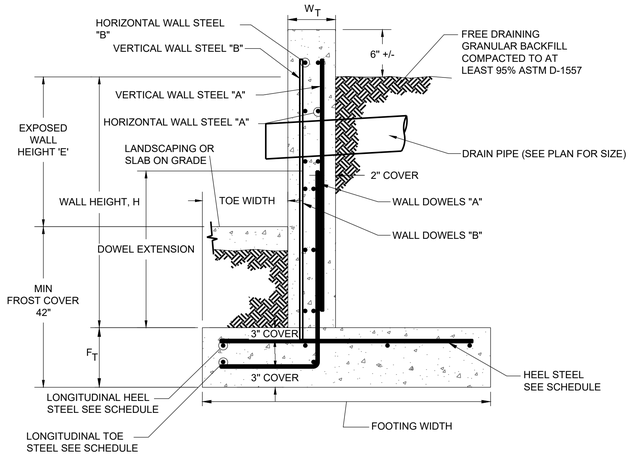

CONCRETE HEADWALL DETAIL

SCALE: 1" = 1'

1 D.115

NOTES:
1) USE 3,000 PSI CONCRETE MINIMUM
2) BACKFILL MATERIAL TO BE GRANULAR AND FREE DRAINING
3) PROVIDE ADEQUATE DRAINAGE
4) ASSURE PROPERLY COMPACTED SOILS, 90% OF MAXIMUM MODIFIED PROCTOR DENSITY IN 8" LIFTS
5) SEE SITE GRADING AND DRAINAGE PLAN FOR WALL LOCATIONS
6) PROVIDE INSPECTION OF CONCRETE RETAINING WALL CONSTRUCTION TO VERIFY REINFORCEMENT PLACED PER PLAN PRIOR TO PLACEMENT OF CONCRETE FOOTINGS AND FOUNDATION WALLS.

E	H	W_T	F_T	FTG WIDTH	TOE WIDTH	VERTICAL WALL STEEL "A"	HORIZONTAL WALL STEEL "A"	VERTICAL WALL STEEL "B"	HORIZONTAL WALL STEEL "B"	WALL DOWELS "A"	WALL DOWELS "B"	DOWEL EXTENSION	HEEL STEEL	LONGITUDINAL TOE STEEL	LONGITUDINAL HEEL STEEL
4'0"	7'6"	8"	12"	3'6"	1'6"	#4 @ 9" O.C.	#4 @ 12" O.C.	NONE	NONE	#4 @ 9" O.C.	NONE	24"	#4 @ 9" O.C.	#4 @ 18" O.C.	#4 @ 9" O.C.

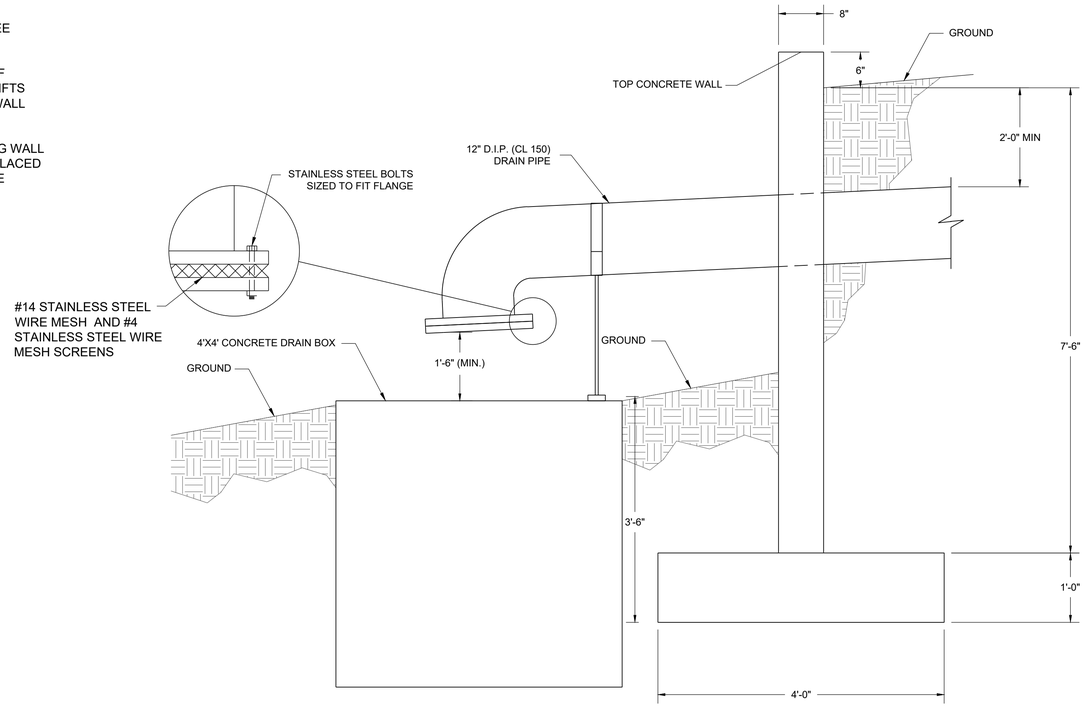

CROSS SECTION DRAIN HEADWALL DETAIL

SCALE: 1" = 1'

2 D.115

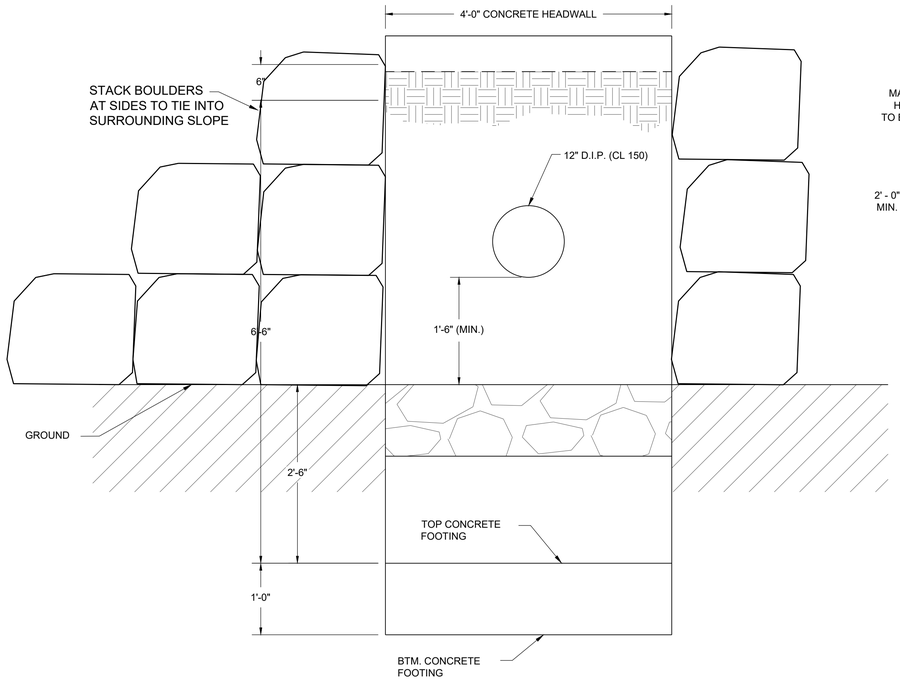

ELEVATION: DRAIN HEADWALL

SCALE: 1" = 1'

3 D.115

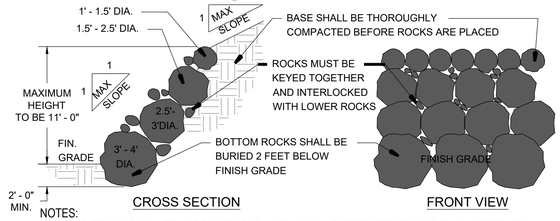

NOTES:
1. THE ROCKS SHALL BE HARD, DURABLE, AND ANGULAR FIELD STONES AND SHALL INTERLOCK WITH ADJACENT ROCKS.
2. THE ROCKS SHALL BE SET SO AS NOT TO EXCEED A 1 TO 1 SLOPE AS SHOWN.
3. LARGE IRREGULARITIES BETWEEN STONES SHALL BE FILLED WITH ROCK SPALLS OF SUITABLE SIZE AND RAMMED TIGHTLY INTO PLACE FROM THE BOTTOM TO THE TOP.
4. ALLOW HEIGHT OF WALL HORIZONTAL DISTANCE BETWEEN ROCK WALLS.

ROCK FACED EMBANKMENT

SCALE: NTS

4 D.115

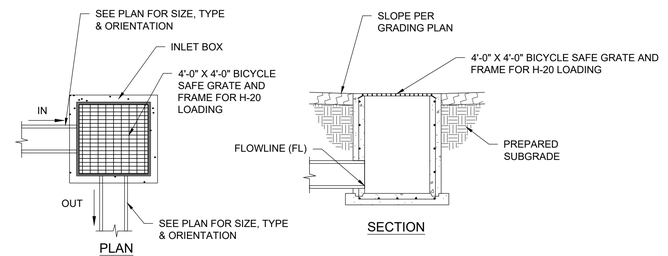

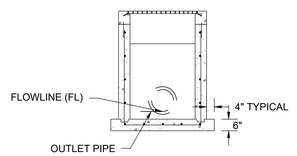

NOTES:
1. ALL REBAR SHALL BE EPOXY COATED.
2. GRATE AND FRAMES SHALL BE HOT-DIPPED GALVANIZED.
3. DOWEL LAPS SHALL BE 24".
4. COAT ALL METAL PARTS WITH ASPHALTUM PAINT.

4'X4' INLET BOX

SCALE: NTS

5 D.115

FOR BID

03-10-2021

GLEN SON ENGINEERING
Consulting Engineers & Surveyors
12401 SOUTH 450 EAST, BUILDING C, UNIT 2, DRAPER, UT 84020
PHONE: (801) 571-9414 FAX: (801) 571-9449

LICENSED PROFESSIONAL ENGINEER
03/10/21
NO. 4939908-2202
James J. Milligan
STATE OF UTAH

POWDER MOUNTAIN WATER AND SEWER IMPROVEMENT DISTRICT

REVISIONS

REV	DATE	BY	COMMENTS

1" SCALE MEASURES 1" ON FULL SIZE SHEET
ADJUST FOR HALF SIZE SHEETS
0 1"

DATE: MARCH 2021
DRAWING NAME: DETAILS
DESIGNED/DRAWN BY: JM/BP
CHECKED: ---
APPROVED: ---

DETAILS

350,000 GALLON CULINARY WATER TANK
POWDER MOUNTAIN WATER & SEWER IMPROVEMENT DISTRICT
WEBER COUNTY, UTAH

REVISION:

PROJ. # POW.010

D.115

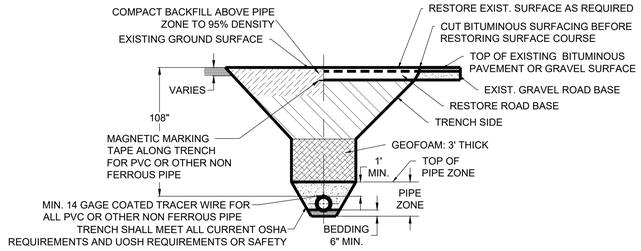

CROSS-SECTION: TYPICAL TRENCH

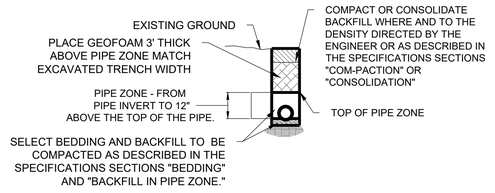

UNIMPROVED TERRAIN TRENCH SECTION

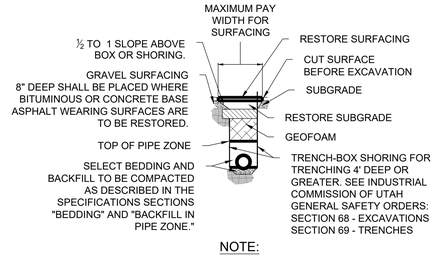

NOTE:

CRUSHED GRAVEL SURFACING 8" DEEP SHALL BE PLACED OVER THE TRENCH WHERE PIPE LINES ARE LOCATED ALONG ROAD SHOULDERS.

IMPROVED TERRAIN TRENCH SECTION

SAFE BEARING LOADS

SOIL TYPE	SAFE BEARING LOAD (lb/ft)
SAND	1000
SAND & GRAVEL	1500
SAND & GRAVEL CEMENTED WITH CLAY	2000
SHALE	5000

SAFE BEARING LOAD FORMULA

THRUST BLOCK AREA AGAINST TRENCH WALL (SQUARE FEET) = THRUST ON FITTING / SAFE BEARING LOAD OF SOIL

THRUST ON FITTINGS

POUNDS @ 1 POUND PER SQUARE INCH OF WATER PRESSURE*				
PIPE SIZE	TEES	90° BENDS	45° BENDS	22.5° BENDS
4"	18.5	26.1	14.2	7.2
6"	38	53.7	29.1	14.7
8"	65.8	93	50.4	25.5
10"	107.5	152	82.4	41.7
12"	153.1	216.4	117.2	59.4
14"	183.8	260.0	141.0	71.5
16"	237.8	336.3	182.8	92.7
18"	298.6	422.3	229.7	116.5

*MULTIPLY THRUST BY MAXIMUM WATER PRESSURE

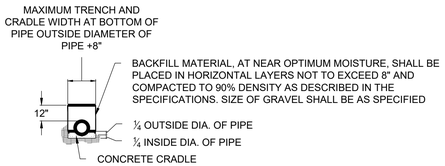

CLASS A PIPE BEDDING

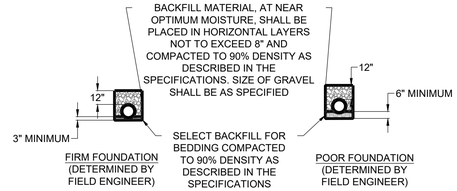

CLASS B PIPE BEDDING

TEE WITH CAP | 90° ELBOW | TEE | CAP OR PLUG | ELBOW | REDUCER | CROSS

CONCRETE THRUST BLOCK DETAILS

NOTES:

1. WATER LINES 12 INCHES AND LARGER SHALL BE DUCTILE IRON CLASS-51.
2. WATER LINES 10 INCHES AND SMALLER SHALL BE PVC AWWA C900 CLASS 200.
3. VALVES 12 INCHES AND LARGER SHALL BE BUTTERFLY VALVES.
4. WHENEVER POSSIBLE "HOT TAP" CONNECTIONS REQUIRED. HOT TAP VALVE TO BE SUPPORTED DURING CONNECTION. CONTRACTOR TO NOTIFY CITY 24 HOURS IN ADVANCE OF MAKING CONNECTION.
5. PIPE ZONE SHALL BE BACKFILLED WITH 3/4" GRAVEL MATERIAL.
6. TRACING WIRE TO BE BROUGHT OUTSIDE OF BOTTOM PORTION OF VALVE BOX AND INSIDE TOP TO SURFACE.
7. FURNISH AND INSTALL POLY-WRAP ON DUCTILE IRON PIPE. POLY-WRAP MAY BE DELETED WHERE DIRECTED BY CITY ENGINEER.
8. WHERE COLLAPSIBLE SOILS ARE ENCOUNTERED, FURNISH, PLACE AND COMPACT IMPORTED BACKFILL MATERIALS AS REQUIRED AND AS DIRECTED.
9. SEE DETAIL 2 / D.116 FOR PIPE BEDDING SPECIFICATIONS
10. PIPES DEEPER THAN BURY DEPTH SHOWN MAY OMIT GEOFOAM REQUIREMENT
11. FOR DRAIN PIPES MINIMUM BURY DEPTH IS 48" AND GEOFOAM REQUIREMENT MAY BE OMITTED

WATERLINE TRENCH DETAIL — 1 / D.116
SCALE: NTS

PIPE DIAMETER	MINIMUM WIDTH	MAXIMUM WIDTH
4"	1'-6"	2'-6"
6"	1'-6"	2'-6"
8"	1'-8"	2'-8"
10"	2'-0"	3'-0"
12"	2'-0"	3'-0"
16"	2'-6"	3'-6"
18"	2'-6"	3'-6"

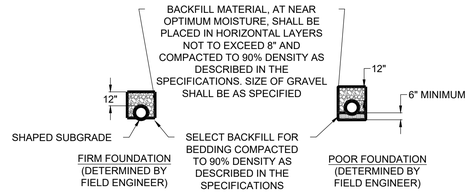

CLASS C PIPE BEDDING

PIPE BEDDING SPECIFICATIONS — 2 / D.116
SCALE: NTS

FOR BID
03-10-2021

GILSON ENGINEERING
Consulting Engineers & Surveyors
(340) SOUTH 450 EAST BUILDING C, UNIT 2, DRAPER, UT 84020
PHONE: (801) 571-5414 FAX: (801) 571-5449

LICENSED PROFESSIONAL ENGINEER
03/10/21
NO. 4939908-2202
James J. Milligan
STATE OF UTAH

POWDER MOUNTAIN WATER AND SEWER IMPROVEMENT DISTRICT

REVISIONS

REV	DATE	BY	COMMENTS

1" SCALE MEASURES 1" ON FULL SIZE SHEET
ADJUST FOR HALF SIZE SHEETS

DATE: MARCH 2021
DRAWING NAME: DETAILS
DESIGNED/DRAWN BY: JM/BP
CHECKED: ---
APPROVED: ---

DETAILS
350,000 GALLON CULINARY WATER TANK
POWDER MOUNTAIN WATER & SEWER IMPROVEMENT DISTRICT
WEBER COUNTY, UTAH

REVISION:
PROJ. # POW.010
D.116

EROSION CONTROL NOTES

1. AT ALL TIMES DURING CONSTRUCTION, THE CONTRACTOR SHALL BE RESPONSIBLE FOR PREVENTING AND CONTROLLING EROSION DUE TO WIND AND RUNOFF. THE CONTRACTOR SHALL ALSO BE RESPONSIBLE FOR MAINTAINING THE EROSION CONTROL FACILITIES SHOWN ON THE PLAN.

2. CONTRACTOR SHALL BE RESPONSIBLE FOR CLEANING DRAINAGE AND EROSION CONTROL FACILITIES AS REQUIRED. STREETS SHALL BE KEPT CLEAN OF DEBRIS FROM TRAFFIC FROM THE SITE.

3. CONTRACTOR SHALL USE VEHICLE TRACKING CONTROL AT ALL LOCATIONS WHERE VEHICLES WILL ENTER OR EXIT THE SITE. CONTROL FACILITIES WILL BE MAINTAINED WHILE CONSTRUCTION IS IN PROGRESS, MOVED WHEN NECESSARY, AND REMOVED WHEN THE SITE IS PAVED.

4. INLET PROTECTION DEVICES SHALL BE INSTALLED IMMEDIATELY UPON INDIVIDUAL INLETS BECOMING FUNCTIONAL.

5. ALL CONTRACTORS AND SUBCONTRACTORS INVOLVED WITH STORM WATER POLLUTION PREVENTION SHALL OBTAIN A COPY OF THE STORM WATER MANAGEMENT PLAN AND THE STATE OF UTAH DISCHARGE PERMIT SYSTEM. GENERAL PERMIT FOR "STORM DISCHARGES ASSOCIATED WITH CONSTRUCTION ACTIVITY" AND BECOME FAMILIAR WITH THEIR CONTENT.

6. ALL WASH WATER (CONCRETE TRUCKS, VEHICLE CLEANING, ETC.) SHALL BE DISPOSED IN A MANNER THAT PREVENTS CONTACT WITH STORM WATER DISCHARGES FROM THE SITE.

7. FUGITIVE DUST AREAS SHALL BE CONTROLLED BY SPRAYING WATER ON THE DRY AREAS OF THE SITE. CONTRACTOR WILL SUPPLY THE CITY WITH A DUST CONTROL PLAN AT THE TIME OF THE PRE-CONTSTRUCTION MEETING.

8. NO RUBBISH, TRASH, GARBAGE OR OTHER SUCH MATERIALS SHALL BE DISCHARGED INTO DRAINAGE DITCHES OR WATERS OF THE STATE.

9. ALL MATERIALS SPILLED, DROPPED, WASHED OR TRACKED FROM VEHICLES ONTO ROADWAYS OR INTO STORM DRAINS MUST BE REMOVED IMMEDIATELY.

10. THE CONTRACTOR SHALL BE RESPONSIBLE FOR ADJUSTING THE EROSION CONTROL MEASURES (SILT FENCES, STRAW BALES, ETC.) DUE TO GRADE CHANGES OR OTHER UNFORESEEN CONDITIONS DURING DEVELOPMENT OF THE PROJECT.

11. ALL INLETS WILL HAVE TEMPORARY INLET CONTROL.

12. TEMPORARY SANITATION FACILITIES REQUIRED.

13. CONTRACTOR TO COORDINATE WITH PUBLIC WORKS INSPECTOR ON ALL REQUESTS TO MODIFY OR MAKE CHANGES TO SWPPP/EROSION CONTROL PLAN.

LEGEND

- -BMP SILT FENCE
- -TOPSOIL STOCKPILE AREA (OR AS DIRECTED BY OWNER) BMP EARTH BERM BARRIER
- -BMP MATERIALS STORAGE, BMP VEHICLE AND EQUIPMENT FUELING, BMP CONCRETE WASTE MANAGEMENT, BMP PORTABLE TOILETS, BMP EARTH BERM BARRIER
- -BMP DUST CONTROLS, BMP GRADING PRACTICES, BMP CONTAMINATED OR ERODIBLE SURFACE AREAS, REPOSITORY STOCKPILE AREA (OR AS DIRECTED BY OWNER), BMP EARTH BERM BARRIER

N

120 0 120 240

SCALE IN FEET

NOTES:

1 - ALL PROPOSED AND EXISTING INLETS ARE TO BE PROTECTED. SEE BMP INLET PROTECTION ER.102, BMP CATCH BASIN CLEANING, BMP INSPECTION AND MAINTENANCE FOR INLET PROTECTION DETAILS.

2 - EXISTING GROUND COVER = 50% SEE BMP PRESERVATION OF EXISTING VEGETATION.

3 - SEQUENCE OF CONSTRUCTION

PHASE I

1. INSTALL STABILIZED CONSTRUCTION ENTRANCES.
2. CONSTRUCT SILT FENCES ON THE SITE.
3. CONSTRUCT SEDIMENTATION PONDS WHERE NEEDED PER DISCRETION OF CONTRACTOR. SIZE TO BE DETERMINED BY ENGINEER.
4. HALT ALL ACTIVITIES AND CONTACT CIVIL ENGINEERING CONSULTANT TO PERFORM INSPECTION OF BMP'S. GENERAL CONTRACTOR SHALL SCHEDULE AND CONDUCT STORM WATER PRE-CONSTRUCTION MEETING WITH ENGINEER AND ALL GROUND DISTURBING CONTRACTORS BEFORE PRECEDING WITH CONSTRUCTION.
5. PREPARE TEMPORARY PARKING AND STORAGE AREAS.
6. START CONSTRUCTION OF BUILDING PAD AND STRUCTURES. STORM DRAIN WATER DURING CONSTRUCTION WILL BE LOCATED IN RETENTION POND.
7. BEGIN GRADING THE SITE.

PHASE II

1. MAINTAIN SILT FENCE, INLET PROTECTION AND STABILIZED CONSTRUCTION EXITS INSTALLED DURING PHASE #1.
2. COMPLETE PERMANENT DETENTION POND CONSTRUCTION.
3. BEGIN CONSTRUCTION OF UNDERGROUND UTILITIES.
4. INSTALL INLET PROTECTION AT NEW STORM DRAIN INLETS, AS INSTALLED.
8. INSTALL PERMANENT VEGETATION AND PLANT MATERIALS.
9. REMOVE ALL TEMPORARY EROSION & SEDIMENTATION CONTROL DEVICES (ONLY AFTER FINAL STABILIZATION HAS BEEN ACHIEVED).

4 - DETAILS AND BMP'S ARE INCORPORATED INTO THIS PLAN BY REFERENCE.

LAND DISTURBANCE NOTES

1. CONTRACTOR SHOULD PERFORM EARTHWORK IN ACCORDANCE WITH THE LOCAL AUTHORITY HAVING JURISDICTION, EROSION, SEDIMENT, REVEGETATION REQUIREMENTS, AND THE DUST CONTROL PLANS REQUIRED BY THE STATE OF UTAH, DEPARTMENT OF ENVIRONMENTAL QUALITY, DIVISION OF AIR QUALITY.

2. THE SEQUENCE OF CONSTRUCTION IS TO BE FOLLOWED.

3. SEDIMENTATION BMPS SHOWN ON THE EROSION CONTROL AND SEDIMENT CONTROL PLANS TO BE INSTALLED WITHIN THE SAME WORKING DAY THE LAND DISTURBANCE OCCURS.

4. DUST CONTROL BMPS ARE TO BE ON SITE AND IMPLEMENTED AS SOON AS LAND DISTURBANCE OCCURS. THE DUST CONTROL AS REQUIRED BY THE STATE OF UTAH AIR QUALITY PLAN IS TO BE SUBMITTED WITH THE GRADING PLAN. THE DEVELOPER IS RESPONSIBLE FOR CONTROLLING THE DUST PRODUCTED AT HIS PROJECT AND SHALL PROVIDE THE NECESSARY MITIGATION TO KEEP THE DUST TO THE ACCEPTABLE LIMITS IDENTIFIED IN THE AIR QUALITY PERMIT OBTAINED FOR THE STATE OF UTAH, DEPARTMENT OF ENVIORONMENTAL QUALITY, AND DIVISION OF AIR QUALITY.

5. ALL AREAS TO BE REVEGETATED ARE TO RECEIVE REVEGETATION BMPS WITHIN 21 DAYS OF DISTURBANCE.

6. IF THE EXISTING GRADE IS DIFFERENT FROM WHAT IS SHOWN ON THIS GRADING PLAN, STOP WORK AND CONTACT THE WEBER COUNTY, ENGINEERING DEPARTMENT. WORK IS TO REMAIN STOPPED UNTIL THE TOWN'S ENGINEERING DEPARTMENT PROVIDES A WRITTEN NOTICE TO RESUME WORK.

7. THE PROJECT OWNER IS RESPONSIBLE FOR MAINTAINING THE STREETS, STORM DRAINS, AND CHANNELS, DITCHES AND SWALES FREE FROM DEBRIS, SOIL, MUD, OR OTHER MATERIAL THAT WOULD CAUSE A PUBLIC SAFETY CONCERN, VIOLATE THE WEBER COUNTY UPDES PERMIT, STATE OR FEDERAL LAWS, OR PREVENT THE FACILITY FROM OPERATING.

8. ALL CONCRETE TRUCKS ARE TO USE THE DESIGNATED WASHOUT AREA(S). FAILURE TO COMPLY WILL RESULT IN A WORK STOP AND THE OFFENDER COULD BE GUILTY OF A CLASS C MISDEMEANOR.

9. L.O.D. BARRIERS ARE TO BE IN PLACE AND MAINTAINED UNTIL WRITTEN NOTIFICATION IS RECEIVED FROM THE ENGINEERING DEPARTMENT. THE OWNER IS RESPONSIBLE FOR MAINTAINING L.O.D. BARRIERS.

10. IF DISTURBANCE OCCURS OUTSIDE THE L.O.D. WORK WILL STOP AND REMAIN STOPPED UNTIL THE WRITTEN RESPONSE IS RECEIVED FROM THE TOWN.

11. THE OWNER IS TO BE RESPONSIBLE FOR ADDITIONAL GRADING INFORMATION AS REQUIRED THROUGHOUT THE REMAINDER OF THE PROJECT.

12. SILT FENCES TO BE INSTALLED AT ALL DOWN GRADE SLOPES AND SHALL BE REQUIRED ON PHASE LINE FOR NON-CONCURRENT CONSTRUCTION.

13. ADDITIONAL CONSTRUCTION ENTRANCES SHALL BE REQUIRED ON PHASE LINE FOR NON-CONCURRENT CONSTRUCTION.

FOR BID

03-10-2021

GILSON ENGINEERING
Consulting Engineers & Surveyors
(340) SOUTH 450 EAST BUILDING C, UNIT 2, DRAPER, UT 84020
PHONE: (801) 571-5414 FAX: (801) 571-5449

LICENSED PROFESSIONAL ENGINEER
03/10/21
NO. 4939908-2202
James J. Milligan
STATE OF UTAH

POWDER MOUNTAIN WATER AND SEWER IMPROVEMENT DISTRICT

REV	DATE	BY	COMMENTS

REVISIONS

1" SCALE MEASURES 1" ON FULL SIZE SHEET
ADJUST FOR HALF SIZE SHEETS

0 1"

DATE: MARCH 2021
DRAWING NAME: EROSION CONTROL PLAN
DESIGNED/DRAWN BY: JM/BP
CHECKED: ---
APPROVED: ---

EROSION CONTROL PLAN

350,000 GALLON CULINARY WATER TANK
POWDER MOUNTAIN WATER & SEWER IMPROVEMENT DISTRICT
WEBER COUNTY, UTAH

REVISION: -

PROJ. # POW.010

ER.100

AREA CONTROL PROCEDURES

WM-001

1 OF 1

APPLICATIONS

Manufacturing
Material handling
Vehicle Maintenance
Construction
Commercial Activities
Roadways
Waste Containment
Housekeeping Practices

TARGETED POLLUTANTS

- ☑ Sediment
- ☑ Heavy Metals
- ☑ Toxic Materials
- ☑ Oxygen Demanding Substances
- ☑ Oil and Grease
- ☑ Floatable Materials
- ☑ Bacteria and Viruses

DESCRIPTION

Area control procedures involve practicing good housekeeping measures such as maintaining indoor or covered material storage and industrial processing areas. If the area is kept clean, the risk of accumulating materials on footwear and clothing is reduced, in turn the chance of left over pollutants making contact with stormwater polluting surface water is minimized.

IMPLEMENTAION

Area Control procedures can be used at any facility where materials may be tracked into areas where they can come in contact with stormwater runoff. Areas can include material handling areas, storage areas, or process areas.

- Effective practices include the following:
- Store hazardous materials and wastes in covered containers and protect from vandalism.
- Storm Place stock pile if spill cleanup materials where it will be readily accessible.
- Train employees in good housekeeping measures.
- Designate responsible individuals to oversee and enforce control measures
- Cover garments, foot mats and other devices used to collect residual material near the area. Clean regularly.
- Brush off clothing before leaving area.
- Stop feet to remove material before leaving area.
- Use floor mats at exits
- Use coverall, smocks, and other over garments in areas where exposure to material is of greatest concern. Remove before leaving area.
- Post signs to remind employees about these practices.

LIMITATIONS

- Procedures and practices presented in this BMP are general. Contractor should identify appropriate practices for the specific materials used or stored onsite.
- May be seen as tedious by employees and therefore may not be followed.

MAINTENANCE

- Materials storage areas and industrial processing areas should be checked regularly to ensure that good housekeeping measures are implemented.
- Verify spill control and cleanup materials are onsite, near storage, unloading and maintenance areas
- Update your spill prevention control plan and stock cleanup material

Vehicle and Equipment Fueling

WM-003

1 OF 1

OBJECTIVES

Manufacturing
Material Handling
Vehicle Maintenance
Construction
Commercial Activities
Roadways
Waste Containment
Housekeeping Practices

TARGETED POLLUTANTS

- ☐ Sediment
- ☑ Heavy Metals
- ☑ Toxic Materials
- ☐ Oxygen Demanding Substances
- ☑ Oil and Grease
- ☐ Floatable Materials
- ☐ Bacteria and Viruses

DESCRIPTION

Prevent fuel spills and leaks, and reduce their impacts to stormwater by using offsite facilities, fueling in designated areas only, enclosing or covering stored fuel, implementing spill controls, and training employees and subcontractors.

IMPLEMENTATION

- Use properly maintained offsite fueling stations whenever possible. Fueling vehicles and equipment outdoors or in areas where fuel may spill/leak onto paved surfaces or into drainage pathways can pollute stormwater. If you fuel a large number of vehicles or pieces of equipment, consider using an offsite fueling station.
- Fueling that must occur on-site use designated areas, located away from drainage courses, to prevent the run-on of stormwater and the runoff of spills properly.
- Educate employees about pollution prevention measures and goals,
- Focus pollution prevention activities on containment of spills and leaks, most of which may occur during liquid transfers.
- Discourage "topping Off" of fuel tanks.
- Always use secondary containment, such as a drain pan, when fueling to catch spills/leaks.
- Carry out all federal and state requirements regarding stationary above ground storage tanks., Avoid mobile fueling of mobile construction equipment around the site; rather, transport the equipment to designated fueling areas. With the exception of tracked equipment such as bulldozers and perhaps forklifts, most vehicles should be able to travel to a designated area with little lost time. Train employees and subcontractors in proper fueling and cleanup procedures.

LIMITATIONS

Sending vehicles/equipment off-site should be done in conjunction with Stabilized Construction Entrance BMP.

MAINTENANCE

- Keep ample supplies of spill cleanup materials on-site
- Inspect fueling areas and storage tanks on a regular schedule

CONCRETE WASTE MANAGEMENT

WM-026

1 OF 1

OBJECTIVES

Housekeeping Practices
Contain Waste
Minimize disturbed Areas
Stabilize Disturbed Areas
Protect Slopes/Channels
Control Site Perimeter
Control Internal Erosion

TARGETED POLLUTANTS

- ☐ Sediment
- ☐ Heavy Metals
- ☐ Toxic Materials
- ☐ Oxygen Demanding Substances
- ☐ Oil and Grease
- ☐ Floatable Materials
- ☐ Bacteria and Viruses

DESCRIPTION:

Prevent or reduce the discharge of pollutants to stormwater from concrete wash by conducting washout off-site, performing on-site washout in a designated area, and training employees and subcontractors.

APPLICATIONS:

This technique is applicable to all types of sites.

INSTALLATION/APPLICATION CRITERIA:

- Store dry and wet materials under cover, away from drainage areas.
- Avoid mixing excess amounts of fresh concrete or cement on-site.
- Perform washout of concrete trucks off-site or in designated areas only.
- Do not wash out concrete trucks into storm drains, open ditches, streets, or streams.
- Do not allow excess concrete to be dumped on-site, except in designated areas.
- When washing concrete to remove fine particles and expose the aggregate, avoid creating runoff by draining the water within a bermed or level area. (See Earth Berm Barrier information sheet.)
- Train employees and subcontractors in proper concrete waste management.

LIMITATIONS:

Off-site washout of concrete wastes may not always be possible.

MAINTENANCE:

- Inspect subcontractors to ensure that concrete wastes are being properly managed.
- If using a temporary pit, dispose hardened concrete on a regular basis.

EARTH BERM BARRIER

WM-027

1 OF 1

OBJECTIVES

Housekeeping Practices
Contain Waste
Minimize disturbed Areas
Stabilize Disturbed Areas
Protect Slopes/Channels
Control Site Perimeter
Control Internal Erosion

TARGETED POLLUTANTS

- ☐ Sediment
- ☐ Heavy Metals
- ☐ Toxic Materials
- ☐ Oxygen Demanding Substances
- ☐ Oil and Grease
- ☐ Floatable Materials
- ☐ Bacteria and Viruses

DESCRIPTION:

A temporary containment control constructed of compacted soil.

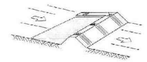

APPLICATION:

- Construct around waste and materials storage area.
- Construct around staging and maintenance areas.
- Construct around vehicle parking and servicing areas.

INSTALLATION/APPLICATION CRITERIA:

- Construct an earthen berm down hill of the area to be controlled. The berm should surround fueling facilities and maintenance areas on three sides to provide containment.
- Berm needs to be a minimum of 1 foot tall by 1 foot wide and be compacted by earth moving equipment.

LIMITATIONS:

- Not effective on steep slopes.
- Limits access to controlled area.
- Personnel need to quickly respond to spills with remedial actions.

MAINTENANCE:

- Observe daily for any non-stormwater discharge.
- Look for runoff bypassing ends of berms or undercutting berms.
- Repair or replace damaged areas of the berm and remove accumulated sediment.
- Recompact soil around berm as necessary to prevent piping.

HAZARDOUS WASTE MANAGEMENT

WM-011

1 OF 1

OBJECTIVES

New Development
Residential
Commercial Activities
Industrial Activities
Municipal Facilities
Illegal Discharges

TARGETED POLLUTANTS

- ☑ Sediment
- ☑ Heavy Metals
- ☑ Toxic Materials
- ☐ Oxygen Demanding Substances
- ☑ Oil and Grease
- ☑ Floatable Materials
- ☐ Bacteria and Viruses

DESCRIPTION

Prevent or reduce the discharge of pollutants to stormwater from hazardous waste through proper material use, waste disposal, and training of employees and subcontractors.

IMPLEMENTAION

Many of the chemicals used on-site can be hazardous materials which become hazardous waste upon disposal. These wastes may include:

- Paints and solvents, petroleum products such as oils, fuels and greases, herbicides and pesticides, acids for cleaning masonry, and concrete curing compounds.
-
- In addition, sites with existing structures may contain wastes which must be disposed of in accordance with federal, state and local regulations, including:
- Sandblasting grit mixed with lead, cadmium or chromium based paints, asbestos, and PCBs

INSTALLATION/APPLICATION CRITERIA

The following steps will help reduce stormwater pollution from hazardous wastes:

- Use the entire product before disposing of the container.
- Do not remove the original product label; it contains important safety and disposal information.
- Do not over-apply herbicides and pesticides. Prepare only the amount needed. Follow the recommended usage instructions. Over-application is expensive and environmentally harmful. Apply surface dressings in several smaller applications, as opposed to one large application, to allow time for infiltration and to avoid excess material being carried off-site by runoff. Do not apply these chemicals just before it rains. People applying pesticides must be certified in accordance with Federal and State regulations.

LIMITATIONS:

Hazardous waste that cannot be reused or recycled must be disposed of by a licensed hazardous waste hauler.

MAINTENANCE:

- Inspect hazardous waste receptacles and areas regularly.
- Arrange for regular hazardous waste collection.

VEHICLE AND EQUIPMENT WASH DOWN AREA

WM-028

1 OF 1

OBJECTIVES

Housekeeping Practices
Contain Waste
Minimize Disturbed Areas
Stabilize Disturbed Areas
Protect Slopes/Channels
Control Site Perimeter
Control Internal Erosion

TARGETED POLLUTANTS

- ☑ Sediment
- ☐ Heavy Metals
- ☑ Toxic Materials
- ☑ Oxygen Demanding Substances
- ☐ Oil and Grease
- ☐ Floatable Materials
- ☐ Bacteria and Viruses

DESCRIPTION:

A stabilized pad of crushed stone for general washing of equipment and construction vehicles.

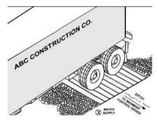

APPLICATION:

- At any site where regular washing of vehicles and equipment will occur. May also be used as a filling point for water trucks limiting erosion caused by overflow or spillage of water.

INSTALLATION/APPLICATION CRITERIA:

- Clear and grub area and grade to provide maximum slope of 1%
- Compact subgrade and place filter fabric if desired (recommended for wash areas to remain in use for more than 3 months).
- Place coarse aggregate, 1 to 2-1/2 inches in size, to a minimum depth of 8 inches.
- Install silt fence down gradient (see silt fence BMP information sheet).

LIMITATIONS:

- Cannot be utilized for washing equipment or vehicles that may cause contamination of runoff such as fertilizer equipment or concrete equipment. Solely used to control sediment in wash water.

MAINTENANCE:

- Inspect daily for loss of gravel or sediment buildup.
- Inspect adjacent area for sediment deposit and install additional controls as necessary.
- Repair area and replace gravel as required to maintain control in good working condition.
- Expand stabilized area as required to accommodate activities.
- Maintain silt fence as outlined in specific silt fence BMP information sheet.

PORTABLE TOILETS

WM-029

1 OF 1

OBJECTIVES

Housekeeping Practices
Contain Waste

TARGETED POLLUTANTS

- ☐ Sediment
- ☐ Heavy Metals
- ☐ Toxic Materials
- ☐ Oxygen Demanding Substances
- ☐ Oil and Grease
- ☐ Floatable Materials
- ☑ Bacteria and Viruses
- ☑ Other Waste

DESCRIPTION

Temporary On-Site Sanitary Facilities for construction personnel

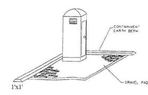

APPLICATION

- All sites with no permanent sanitary faculties or where permanent facility is to far from activities.
- Installation/application criteria:
- Locate portable toilets in convenient locations throughout the site
- Prepare level, gravel surface and provide clear access to the toilets for servicing and for on-site personnel.
- Construct earth berm perimeter (se earth berm barrier information sheet). Control for spill/protection leak.

LIMITATIONS

No limitations

MAINTENANCE

- Portable toilets should be maintained in good working order by licensed service with daily observation for leak detection.
- Regular waste collection should be arranged with licensed service.
- All waste should be deposited in sanitary sewer system for treatment with appropriate agency approval.

RIPRAP

TC-004

1 OF 1

OBJECTIVES

Soils
Area Required
Slope
Water Availability
Aesthetics
Hydraulic Head
Environmental Side Effects

TARGETED POLLUTANTS

- ☐ Sediment
- ☐ Heavy Metals
- ☐ Toxic Materials
- ☐ Oxygen Demanding Substances
- ☐ Oil and Grease
- ☐ Floatable Materials
- ☐ Bacteria and Viruses

DESCRIPTION:

Riprap is a permanent, erosion-resistant protective layer made of loose stones. It is intended to protect soil from erosion in areas of concentrated runoff. Riprap may also be used to stabilize slopes that are unstable because of seepage problems.

APPLICATION:

- Riprap is normally used at locations where erosive forces from water flow exceed the ability of the soil or vegetative cover to resist those forces.
- Riprap can be used for pipe outlet protection, channel lining, scour protection, etc.
- Riprap is commonly used for wave protection on lakes.

INSTALLATION/APPLICATION CRITERIA:

- For slopes steeper than 2:1, consider using materials other than riprap for erosion protection.
- If riprap is being planned for the bottom of a permanently flowing channel, the bottom can be modified to enhance fish habitat. This can be done by constructing riffles and pools which simulate natural conditions.
- When working within flowing streams, measures should be taken to prevent excessive turbidity and erosion during construction. Bypassing base flows or temporarily blocking base flows are two possible methods. Work should be done during a period of low flow.
- In designing riprap consider the following:
- Use durable rock, such as granite, and a variety of rock sizes.
- The thickness of riprap layers should be at least 1.25 times the max. stone diameter.
- Filter material is usually required between riprap and the underlying soil surface.

LIMITATIONS:

- Riprap may be unstable on very steep slopes.
- The placement of a riprap in streams requires a state stream alteration permit.

MAINTENANCE:

- Riprap should be inspected annually and after major storms.
- If riprap has been damaged, repairs should be made promptly to prevent a progressive failure.

If repairs are needed repeatedly at one location, the site should be evaluated to see if original design conditions have changed.

GILSON ENGINEERING
Consulting Engineers & Surveyors
1140 SOUTH 450 EAST BUILDING C, UNIT 2, DRAPER, UT 84020
PHONE: (801) 571-9414 FAX: (801) 571-9449

POWDER MOUNTAIN WATER & SEWER IMPROVEMENT DISTRICT

REV	DATE	BY	COMMENTS
			REVISIONS

1" SCALE MEASURES 1" ON FULL SIZE SHEET
ADJUST FOR HALF SIZE SHEETS
0

DATE: MARCH 2021
DRAWING NAME: BMP DETAILS
DESIGNED/DRAWN BY: JM/BP
CHECKED: ---
APPROVED: ---

BMP DETAILS

350,000 GALLON CULINARY WATER TANK
POWDER MOUNTAIN WATER & SEWER IMPROVEMENT DISTRICT
WEBER COUNTY, UTAH

REVISION:

PROJ. # POW.010

ER.101

STABILIZED CONTRUCTION ENTRANCE

S-027
1 OF 1

OBJECTIVES

Housekeeping Practices
Contain Waste
Minimize Disturbed Areas
Stabilize Disturbed Areas
Protect Slopes/Channels
Control Site Perimeter
Control Internal Erosion

TARGETED POLLUTANTS

- ☑ Sediment
- ☐ Heavy Metals
- ☐ Toxic Materials
- ☐ Oxygen Demanding Substances
- ☐ Oil and Grease
- ☐ Floatable Materials
- ☐ Bacteria and Viruses

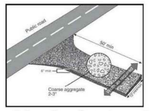

DESCRIPTION:
A stabilized pad of crushed stone located where construction traffic enters or leaves the site from or to paved surface.

APPLICATIONS:
At any point of ingress or egress at a construction site where adjacent traveled way is paved. Generally applies to sites over 2 acres unless special conditions exist.

INSTALLATION/APPLICATION CRITERIA:
- Clear and grub area and grade to provide maximum slope of 2%.
- Compact subgrade and place filter fabric if desired (recommended for entrances to remain for more than 3 months.
- Place coarse aggregate, 1 to 2-1/2 inches in size, to a minimum depth of 8 inches.

LIMITATIONS:
- Requires periodic top dressing with additional stones.
- Should be used in conjunction with street sweeping on adjacent public right-of-way.

MAINTENANCE:
- Inspect daily for loss of gravel or sediment buildup.
- Inspect adjacent roadway for sediment deposit and clean by sweeping or shoveling.
- Repair entrance and replace gravel as required to maintain control in good working condition.
- Expand stabilized area as required to accommodate traffic and prevent erosion at driveways.

OUTDOOR STORAGE OF RAW MATERIALS

WM-008
1 OF 1

OBJECTIVES

Manufacturing
Material Handling
Vehicle Maintenance
Construction
Commercial Activities
Roadways
Waste Containment
Housekeeping Practices

TARGETED POLLUTANTS

- ☑ Sediment
- ☑ Heavy Metals
- ☑ Toxic Materials
- ☐ Oxygen Demanding Substances
- ☑ Oil and Grease
- ☑ Floatable Materials
- ☐ Bacteria and Viruses

DESCRIPTION
Prevent or reduce the discharge of pollutants to stormwater from outdoor materials and product storage areas by enclosing or covering materials, installing secondary containment, and preventing stormwater run-on.

INPLEMENTATION
Protect materials from rainfall, run-on, runoff and wind dispersal:
- Store material indoors.
- Cover the storage area with a roof.
- Cover the material with a temporary covering made of polyethylene, polypropylene, or hypalon.
- Minimize stormwater run-on by enclosing the area or building a berm around the area.
- Use a "doghouse" for storage of liquid containers.
- Parking lots or other surfaces near bulk materials should be swept periodically to remove debris blown or washed from storage area.
- < Install pellet traps at stormwater discharge points where plastic pellets are loaded and unloaded.
- Keep liquids in a designated area on a paved impervious surface within a secondary containment.
- Keep outdoor storage containers in good condition.
- Use berms and curbing.
- Use catch basin filtration inserts.

LIMITATIONS
- Space limitations may preclude storing some materials indoors.
- Some municipalities require that secondary containment areas (regardless of size) be connected to the sanitary sewer, prohibiting any hard connections to the storm drain.
- Storage sheds often must meet building and fire code requirements.

MAINTENANCE:
Berm and curbing repair and patching.

DUST CONTROLS

S-006
1 OF 1

OBJECTIVES

Housekeeping Practices
Contain Waste
Minimize Disturbed Areas
Stabilize Disturbed Areas
Protect Slopes/Channels
Control Site Perimeter
Control Internal Erosion

TARGETED POLLUTANTS

- ☐ Sediment
- ☐ Heavy Metals
- ☐ Toxic Materials
- ☐ Oxygen Demanding Substances
- ☐ Oil and Grease
- ☐ Floatable Materials
- ☐ Bacteria and Viruses

DESCRIPTION:
Dust control measures are used to stabilize soil from wind erosion, and reduce dust by construction activities.

APPLICATION:
Dust control is useful in any process area, loading and unloading area, material handling areas, and transfer areas where dust is generated. Street sweeping is limited to areas that are paved.

INSTALLATION/APPLICATION CRITERIA:
- Mechanical dust collection systems are designed according to the size of dust particles and the amount of air to be processed. Manufacturers' recommendations should be followed for installation (as well as the design of the equipment).
- Two kinds of street weepers are common: brush and vacuum. Vacuum sweepers are more efficient and work best when the area is dry.
- Mechanical equipment should be operated according to the manufacturers' recommendations and should be inspected regularly.

LIMITATIONS:
- Is generally more expensive than manual systems.
- May be impossible to maintain by plant personnel (the more elaborate equipment).
- Is labor and equipment intensive and may not be effective for all pollutants (street sweepers).

MAINTENANCE:
If water sprayers are used, dust-contaminated waters should be collected and taken for treatment. Areas will probably need to be resprayed to keep dust from spreading.

CONTAMINATED OR ERODIABLE SURFACE AREAS

WM-017
1 OF 1

OBJECTIVES

Manufacturing
Material Handling
Vehicle Maintenance
Construction
Commercial Activities
Roadways
Waste Containment
Housekeeping Practices

TARGETED POLLUTANTS

- ☑ Sediment
- ☑ Heavy Metals
- ☑ Toxic Materials
- ☑ Oxygen Demanding Substances
- ☐ Oil and Grease
- ☑ Floatable Materials
- ☐ Bacteria and Viruses

DESCRIPTION:
Prevent or reduce the discharge of pollutants to stormwater from contaminated or erodible surface areas by leaving as much vegetation on-site as possible, minimizing soil exposure time, stabilizing exposed soils, and preventing stormwater runon and runoff.

IMPLEMENTAION
This BMP addresses soils which are not so contaminated as to exceed criteria but the soil is eroding and carrying pollutants off in the stormwater.

Contaminated or erodible surface areas can be controlled by:
- Preservation of natural vegetation,
- Re-vegetation,
- Chemical stabilization,
- Removal of contaminated soils, or
- Geosynthetics.

LIMITATIONS:
Disadvantages of preserving natural vegetation or re-vegetating include:
- Requires substantial planning to preserve and maintain the existing vegetation.
- May not be cost-effective with high land costs.
- Lack of rainfall and/or poor soils may limit the success of re-vegetated areas.
- Disadvantages of chemical stabilization include:
- Creation of impervious surfaces.
- May cause harmful effects on water quality.
- Is usually more expensive than vegetative cover.

MAINTENANCE:
Maintenance should be minimal, except if irrigation of vegetation is necessary.

ILLEGAL DUMPING CONTROLS

WM-021
1 OF 1

OBJECTIVES

New Development
Residential
Commercial Activities
Industrial Activities
Municipal Facilities
Illegal Discharges

TARGETED POLLUTANTS

- ☐ Sediment
- ☐ Heavy Metals
- ☑ Toxic Materials
- ☑ Oxygen Demanding Substances
- ☑ Oil and Grease
- ☑ Floatable Materials
- ☐ Bacteria and Viruses

DESCRIPTION:
Implement measures to detect, correct, and enforce against illegal dumping of pollutants on streets, into the storm drain system, and into creeks. Substance illegally dumped on streets, into the storm drain system, and into creeks includes paints, used oil and other automotive fluids, construction debris, chemicals, fresh concrete, leaves, grass clippings, and pet wastes. All of these wastes can cause storm water and receiving water quality problems as well as clog the storm drain system.

IMPLEMENTAION
One of the keys to success is increasing the general public's awareness of the problem and to at least identify the incident, if not correct it. There are a number of ways of accomplishing this:
- Train municipal staff from all departments to recognize and report incidents.
- Deputize municipal staff that may come into contact with illegal dumping with the authority to write illegal dumping tickets for offenders caught in the act.
- Educate the public.
- Provide the public with a mechanism for reporting such as a hot line.

Establish system for tracking incidents which will identify:
- Illegal dumping "hot spots",
- Types and quantities (in some cases) of wastes,
- Patterns in time of occurrence (time of day/night, month, or year),
- Mode of dumping (abandoned containers, "midnight dumping" from moving vehicles, direct dumping of materials, accident/spills), and
- Responsible parties.
- A tracking system also helps manage the program by indicating trends, and identifying who, what, when, and where efforts should be concentrated.

LIMITATIONS
The elimination of illegal dumping is dependent on the availability, convenience, and cost of alternative means of disposal.

SILT FENCE

S-026
1 OF 1

OBJECTIVES

Housekeeping Practices
Contain Waste
Minimize Disturbed Areas
Stabilize Disturbed Areas
Protect Slopes/Channels
Control Site Perimeter
Control Internal Erosion

TARGETED POLLUTANTS

- ☑ Sediment
- ☐ Heavy Metals
- ☐ Toxic Materials
- ☐ Oxygen Demanding Substances
- ☐ Oil and Grease
- ☐ Floatable Materials
- ☐ Bacteria and Viruses

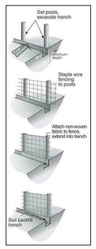

DESCRIPTION:
A temporary sediment barrier consisting of entrenched filter fabric stretched across and secured to supporting posts.

APPLICATION:
- Perimeter control: place barrier at down gradient limits of disturbance
- Sediment barrier: place barrier at toe of slope or soil stockpile
- Protection of existing waterways: place barrier at top of stream bank
- Inlet protection: place fence surrounding catch basins

INSTALLATION/APPLICATION CRITERIA:
- Place posts 6 feet apart on center along contour (or use preassembled unit) and drive 2 feet minimum into ground. Excavate an anchor trench immediately up gradient of posts.
- Secure wire mesh (14 gage min. With 6 inch openings) t upslope side of posts. Attach with heavy duty 1 inch long wire staples, tie wires or hog rings.
- Cut fabric to required width, unroll along length of barrier and drape over barrier. Secure fabric to mesh with twine, staples, or similar, with trailing edge extending into anchor trench.
- Backfill trench over filter fabric to anchor.

LIMITATIONS:
- Recommended maximum drainage area of 0.5 acre per 100 feet of fence
- Recommended maximum up gradient slope length of 150 feet
- Recommended maximum uphill grade of 2:1 (50%)
- Recommended maximum flow rate of 0.5 cfs
- Ponding should not be allowed behind fence

MAINTENANCE:
- Inspect immediately after any rainfall and at least daily during prolonged rainfall.
- Look for runoff bypassing ends of barriers or undercutting barriers.
- Repair or replace damaged areas of the barrier and remove accumulated sediment.
- Re-anchor fence as necessary to prevent shortcutting.
- Remove accumulated sediment when it reaches ½ the height of the fence.

OUTDOOR LOADING/UNLOADING MATERIALS

WM-007
1 OF 1

OBJECTIVES

Manufacturing
Material Handling
Vehicle Maintenance
Construction
Commercial Activities
Roadways
Waste Containment
Housekeeping Practices

TARGETED POLLUTANTS

- ☐ Sediment
- ☑ Heavy Metals
- ☑ Toxic Materials
- ☑ Oxygen Demanding Substances
- ☑ Oil and Grease
- ☑ Floatable Materials
- ☐ Bacteria and Viruses

DESCRIPTION
Prevent or reduce the discharge of pollutants to stormwater from outdoor loading/unloading of materials.

IMPLMENTATION
- Park tank trucks or delivery vehicles so that spills or leaks can be contained.
- Cover the loading/unloading docks to reduce exposure of materials to rain.
- A seal or door skirt between trailer and building can also prevent exposure to rain.
- Design loading/unloading area to prevent stormwater run-on: grade/Berm and position roof downspouts to direct stormwater away from loading/unloading areas.
- Contain leaks during transfer.
- Use drip pans under hoses.
- Make sure fork lift operators are properly trained.
- Train employees for spill containment and cleanup.

LIMITATIONS
- Space and time limitations may preclude all transfers from being performed indoors or under cover.
- It may not be possible to conduct transfers only during dry weather.

MAINTENANCE
- Conduct regular inspections and make repairs as necessary. The frequency of repairs will depend on the age of the facility.
- Check loading and unloading equipment regularly for leaks: valves, pumps, flanges, and connections.

.

BMP: GRADING PRACTICES

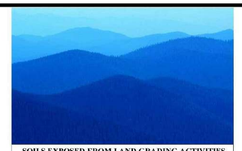

SOILS EXPOSED FROM LAND GRADING ACTIVITIES ARE VERY VULNERABLE TO EROSION

DESCRIPTION:
CONTROL SOIL EROSION BY MINIMIZING THE EXPOSURE OF BARE SOIL TO EROSIVE FORCES. THIS IS DONE BY:
(1) LIMITING THE AMOUNT OF LAND DISTURBED AT ONE TIME IN PREPARATION FOR CONSTRUCTION.
(2) LIMITING THE AMOUNT OF TIME BETWEEN THE DISTURBANCE OF SOIL AND PROTECTION OR STABILIZATION OF DISTURBED SOILS.
(3) USING GRADING PRACTICES TO PROTECT EXPOSED SOILS SUSCEPTIBLE TO STORM WATER RUNOFF. RELATED PRACTICES INCLUDE CONSTRUCTION SEQUENCING, PRESERVATION OF EXISTING VEGETATION, EROSION CONTROL PRACTICES AND SEDIMENT CONTROL PRACTICES.

APPROACH:
- LIMIT THE AREA OF DISTURBANCE TO THOSE AREAS REQUIRING GRADING. THIS PRESERVES EXISTING VEGETATION AND REDUCES THE VULNERABILITY OF SOIL TO EROSION.
- BASED ON EROSION POTENTIAL AND SEDIMENT CONTROL MEASURES ON THE SITE, ESTABLISH WHAT AREAS ARE TO GRADED AT ONE TIME.
- AN UNDISTURBED BUFFER ZONE CONTAINING VEGETATION AT THE LOWEST ELEVATION OF A CONSTRUCTION SITE CAN REDUCE THE TRANSPORT OF SEDIMENT OFF SITE.
- INITIATE SOIL PROTECTION MEASURES DURING THE COURSE OF WORK TO MINIMIZE THE LENGTH OF TIME SOILS EXPOSED TO EROSIVE FORCES.
- CONDUCT WORK IN STAGES SO THAT CONSTRUCTION OR SOIL STABILIZATION OCCURS PROMPTLY AFTER DISTURBANCE OF SOILS.
- ESTABLISH A SCHEDULE GOVERNING THE STABILIZATION OF DISTURBED SLOPES, BOTH IN TERMS OF PASSAGE OF TIME SINCE COMMENCEMENT AND COMPLETION OF DISTURBANCE AND IN TERMS OF PLANTING SEASON.
- LEAVING THE SURFACE OF THE DISTURBED SOIL GRADED IN A ROUGHENED CONDITION (NOT SMOOTH) CAN REDUCE THE QUANTITY AND VELOCITY OF STORM WATER RUNOFF.
- PREVENT STORM WATER RUNOFF FROM RUNNING ONTO STEEP SLOPES FROM ABOVE.
- AVOID LONG, STEEP CUT OR FILL SLOPES THAT ALLOW RUNOFF WATER OF SUFFICIENT QUANTITY OR VELOCITY TO CUT INTO AND ERODE THE SLOPE.

LIMITATIONS:
- THE SPECIFIC APPROACH TO GRADING ON A PARTICULAR SITE DEPENDS ON THE CONDITIONS OF THE SITE AND SURROUNDING LAND; ENGINEERING JUDGMENT IS REQUIRED TO DESIGN THE APPROACH BEST SUITED FOR EACH SITE.

MAINTENANCE:
- PRACTICES MAY NEED TO VARY FROM THE APPROVED PLAN IF EROSION PROBLEMS APPEAR WHEN STORM WATER RUNOFF OCCURS.

OBJECTIVES
- ☐ HOUSEKEEPING PRACTICES
- ☐ CONTAIN WASTE
- ☒ MINIMIZE DISTURBED AREAS
- ☒ STABILIZE DISTURBED AREAS
- ☒ PROTECT SLOPES/CHANNELS
- ☐ CONTROL SITE PERIMETER
- ☒ CONTROL INTERNAL EROSION

TARGETED POLLUTANTS
- ■ SEDIMENT
- ☐ NUTRIENTS
- ☐ HEAVY METALS
- ☐ TOXIC MATERIALS
- ☐ OXYGEN DEMANDING SUBSTANCES
- ☐ OIL & GREASE
- ☐ FLOATABLE MATERIALS
- ☐ BACTERIA & VIRUSES

- ■ HIGH IMPACT
- ☒ MEDIUM IMPACT
- ☐ LOW OR UNKNOWN IMPACT

IMPLEMENTATION REQUIRED
- ☒ CAPITAL COSTS
- ☐ O&M COSTS
- ☐ MAINTENANCE
- ■ TRAINING

■ HIGH ☒ MEDIUM ☐ LOW

GILSON ENGINEERING
Consulting Engineers & Surveyors
[1043] SOUTH 450 EAST BUILDING C, UNIT 2, DRAPER, UT 84020
PHONE: (801) 571-3414 FAX: (801) 571-3449

POWDER MOUNTAIN WATER AND SEWER IMPROVEMENT DISTRICT

REV | DATE | BY | COMMENTS | REVISIONS

1" SCALE MEASURES 1" ON FULL SIZE SHEET
ADJUST FOR HALF SIZE SHEETS
0

DATE: MARCH 2021
DRAWING NAME: BMP DETAILS
DESIGNED: JM/BP
DRAWN BY: JM/BP
CHECKED: ---
APPROVED: ---

BMP DETAILS

350,000 GALLON CULINARY WATER TANK
POWDER MOUNTAIN WATER & SEWER IMPROVEMENT DISTRICT
WEBER COUNTY, UTAH

REVISION:

PROJ. # POW.010

ER.102

BMP: CONSTRUCTION SEQUENCING

In sequenced construction, sites are completed in stages and completed portions are permanently stabilized before other areas are disturbed

DESCRIPTION:
CONSTRUCTION SEQUENCING REQUIRES CREATING AND FOLLOWING A WORK SCHEDULE THAT BALANCES THE TIMING OF LAND DISTURBANCE ACTIVITIES AND THE INSTALLATION OF MEASURES TO CONTROL EROSION AND SEDIMENTATION, IN ORDER TO REDUCE ON-SITE EROSION AND OFF-SITE SEDIMENTATION. STAGING AREAS CAN BE USED TO LIMIT CONTAMINATION AND EROSION.

APPROACH:
CONSTRUCTION SEQUENCING CAN BE USED TO PLAN EARTHWORK AND EROSION AND SEDIMENT CONTROL (ESC) ACTIVITIES AT SITES WHERE LAND DISTURBANCES MIGHT AFFECT WATER QUALITY IN A RECEIVING WATER BODY.

CONSTRUCTION SEQUENCING SCHEDULES SHOULD, AT A MINIMUM INCLUDE THE FOLLOWING:
- THE ESC PRACTICES THAT ARE TO BE INSTALLED
- PRINCIPAL DEVELOPMENT ACTIVITIES
- WHICH MEASURES SHOULD BE INSTALLED BEFORE OTHER ACTIVITIES ARE STARTED
- COMPATIBILITY WITH THE GENERAL CONTRACT CONSTRUCTION SCHEDULE

THE FOLLOWING ACTIVITIES AND FEATURES SHOULD BE INCLUDED (AS THEY APPLY):
- CONSTRUCTION ACCESS-ENTRANCE TO SITE, CONSTRUCTION ROUTES, AREAS DESIGNATED FOR EQUIPMENT PARKING
- SEDIMENT TRAPS AND BARRIERS-BASIN TRAPS, SEDIMENT FENCES, OUTLET PROTECTION
- RUNOFF CONVEYANCE SYSTEM-STABILIZE STREAM BANKS, STORM DRAINS, CHANNELS, INLET AND OUTLET PROTECTION, SLOPE DRAINS
- LAND CLEARING AND GRADING-SITE PREPARATION (CUTTING, FILLING, AND GRADING, SEDIMENT TRAPS, BARRIERS, DIVERSIONS, DRAINS, SURFACE ROUGHENING)
- LANDSCAPING AND FINAL STABILIZATION-TOP SOILING, TREES AND SHRUBS, PERMANENT SEEDING, MULCHING, SODDING, RIPRAP

LIMITATIONS:
- WEATHER AND OTHER UNPREDICTABLE VARIABLES MAY AFFECT CONSTRUCTION SEQUENCING SCHEDULES.

MAINTENANCE:
- THE CONSTRUCTION SEQUENCE SHOULD BE FOLLOWED THROUGHOUT THE PROJECT AND THE WRITTEN PLAN SHOULD BE MODIFIED BEFORE ANY CHANGES IN CONSTRUCTION ACTIVITIES ARE EXECUTED.

APPLICATIONS
- ☐ MANUFACTURING
- ☒ MATERIAL HANDLING
- ☐ VEHICLE MAINTENANCE
- ☒ CONSTRUCTION
- ☐ COMMERCIAL ACTIVITIES
- ☐ ROADWAYS
- ☐ WASTE CONTAINMENT
- ☐ HOUSEKEEPING PRACTICES

TARGETED POLLUTANTS
- ■ SEDIMENT
- ☒ NUTRIENTS
- ☐ HEAVY METALS
- ☐ TOXIC MATERIALS
- ☐ OXYGEN DEMANDING SUBSTANCES
- ☐ OIL & GREASE
- ☒ FLOATABLE MATERIALS
- ☐ BACTERIA & VIRUSES

- ■ HIGH IMPACT
- ☒ MEDIUM IMPACT
- ☐ LOW OR UNKNOWN IMPACT

IMPLEMENTATION REQUIRED
- ☒ CAPITAL COSTS
- ☐ O&M COSTS
- ☒ MAINTENANCE
- ☐ TRAINING

■ HIGH ☒ MEDIUM ☐ LOW

OUTDOOR STORAGE OF RAW MATERIALS — WM-008

1 OF 1

OBJECTIVES
- Manufacturing
- Material Handling
- Vehicle Maintenance
- Construction
- Commercial Activities
- Roadways
- Waste Containment
- Housekeeping Practices

TARGETED POLLUTANTS
- ☑ Sediment
- ☑ Heavy Metals
- ☑ Toxic Materials
- ☐ Oxygen Demanding Substances
- ☑ Oil and Grease
- ☑ Floatable Materials
- ☐ Bacteria and Viruses

DESCRIPTION
Prevent or reduce the discharge of pollutants to stormwater from outdoor materials and product storage areas by enclosing or covering materials, installing secondary containment, and preventing stormwater run-on.

IMPLEMENTATION
Protect materials from rainfall, run-on, runoff and wind dispersal:
- Store material indoors.
- Cover the storage area with a roof.
- Cover the material with a temporary covering made of polyethylene, polypropylene, or hypalon.
- Minimize stormwater run-on by enclosing the area or building a berm around the area.
- Use a "doghouse" for storage of liquid containers.
- Parking lots or other surfaces near bulk materials should be swept periodically to remove debris blown or washed from storage area.
- < Install pellet traps at stormwater discharge points where plastic pellets are loaded and unloaded.
- Keep liquids in a designated area on a paved impervious surface within a secondary containment.
- Keep outdoor storage containers in good condition.
- Use berms and curbing.
- Use catch basin filtration inserts.

LIMITATIONS
- Space limitations may preclude storing some materials indoors.
- Some municipalities require that secondary containment areas (regardless of size) be connected to the sanitary sewer, prohibiting any hard connections to the storm drain.
- Storage sheds often must meet building and fire code requirements.

MAINTENANCE:
Berm and curbing repair and patching.

TEMPORARY AND PERMANENT SEEDING — S-011

1 OF 1

OBJECTIVES
- Housekeeping Practices
- Contain Waste
- Minimize Disturbed Areas
- Stabilize Disturbed Areas
- Protect Slopes/Channels
- Control Site Perimeter
- Control Internal Erosion

TARGETED POLLUTANTS
- ☑ Sediment
- ☐ Heavy Metals
- ☐ Toxic Materials
- ☐ Oxygen Demanding Substances
- ☐ Oil and Grease
- ☐ Floatable Materials
- ☐ Bacteria and Viruses

DEFINITION:
Temporary seeding - establishment of short term cover by application of rapidly germinating seed mix (alternatively hydroseeding may be utilized).
Permanent seeding - establishment of final term cover by application of perennial seed mix (alternatively sod may be utilized).

APPLICATION:
Disturbed areas that are at final grade and which will not be disturbed by continuing activities on site. Also areas that are not at final grade but which will be left untouched in excess of one year.

RECOMMENDED SEED MIX:
The recommended seed mix will be dependent on site specific information such as elevation, exposure, soils, water available and topography.

LIMITATIONS:
- Limited to areas that will not be subject to traffic or high usage.
- May require irrigation and fertilizer which creates potential for impacting runoff quality.
- May only be applied during appropriate planting season, temporary cover required until that time.

INSTALLATION:
- Roughen soil to a depth of 2 inches. Add fertilizer, manure, topsoil as necessary.
- Evenly distribute seed using a commonly accepted method such as; breast seeding, drilling, hydroseeding.
- Use a seed mix appropriate for soil and location that will provide rapid germination and growth. Check with County for recommended mix and application rate.
- Cover area with mulch if required due to steep slopes or unsuitable weather conditions.

MAINTENANCE:
- Provide irrigation as required to establish growth and to maintain plant cover through duration of project.
- Reseed as necessary to provide 75% coverage
- Remediate any areas damaged by erosion or traffic.
- When 75% coverage is achieved

BMP: HOUSEKEEPING

Description
Promote efficient and safe housekeeping practices (storage, use, and cleanup) when handling potentially harmful materials such as fertilizers, pesticides, cleaning solutions, paint products, automotive products, and swimming pool chemicals. Related information is provided in BMP fact sheets SC-11 Spill Prevention, Control & Cleanup and SC-34 Waste Handling & Disposal.

Approach
Pollution Prevention

Purchase only the amount of material that will be needed for foreseeable use. In most cases this will result in cost savings in both purchasing and disposal. See SC-61 Safer Alternative Products for additional information.

Be aware of new products that may do the same job with less environmental risk and for less or the equivalent cost. Total cost must be used here; this includes purchase price transportation costs, storage costs, use related costs, clean up costs and disposal costs.

Suggested Protocols
General

Keep work sites clean and orderly. Remove debris in a timely fashion. Sweep the area.

Dispose of wash water, sweepings, and sediments, properly.

Recycle or dispose of fluids properly.

Establish a daily checklist of office, yard and plant areas to confirm cleanliness and adherence to proper storage and security. Specific employees should be assigned specific inspection responsibilities and given the authority to remedy any problems found.

Post waste disposal charts in appropriate locations detailing for each waste its hazardous nature (poison, corrosive, flammable), prohibitions on its disposal (dumpster, drain, sewer) and the recommended disposal method (recycle, sewer, burn, storage, landfill).

Summarize the chosen BMPs applicable to your operation

Require a signed checklist from every user of any hazardous material detailing amount taken, amount used, amount returned and disposal of spent material.

Do a before audit of your site to establish baseline conditions and regular subsequent audits to note any changes and whether conditions are improving or deteriorating.

Keep records of water, air and solid waste quantities and quality tests and their disposition.

Maintain a mass balance of incoming, outgoing and on hand materials so you know when there are unknown losses that need to be tracked down and accounted for.

Use and reward employee suggestions related to BMPs, hazards, pollution reduction, work place safety, cost reduction, alternative materials and procedures, recycling and disposal.

Have, and review regularly, a contingency plan for spills, leaks, weather extremes etc. Make sure all employees know about it and what their role is so that it comes into force automatically.

Training

Train all employees, management, office, yard, manufacturing, field and clerical in BMPs and pollution prevention and make them accountable.

Train municipal employees who handle potentially harmful materials in good housekeeping practices.

Train personnel who use pesticides in the proper use of the pesticides. The California Department of Pesticide Regulation license pesticide dealers, certify pesticide applicators and conduct onsite inspections.

Train employees and contractors in proper techniques for spill containment and cleanup. The employee should have the tools and knowledge to immediately begin cleaning up a spill if one should occur.

Spill Response and Prevention

Refer to SC-11, Spill Prevention, Control & Cleanup.

Keep your Spill Prevention Control and Countermeasure (SPCC) plant up-to-date, and implement accordingly.

Have spill cleanup materials readily available and in a known location.

Cleanup spills immediately and use dry methods if possible.

Properly dispose of spill cleanup material.

Other Considerations

There are no major limitations to this best management practice.

There are no regulatory requirements to this BMP. Existing regulations already require municipalities to properly store, use and dispose of hazardous materials.

Requirements
Costs

Minimal cost associated with this BMP. Implementation of good housekeeping practices may result in cost savings as these procedures may reduce the need for more costly BMPs.

Maintenance

Ongoing maintenance required to keep a clean site. Level of effort is a function of site size and type of activities.

Objectives
- Cover
- Contain
- Educate
- Reduce/Minimize
- Product Substitution

Targeted Constituents
- Sediment
- Nutrients
- Trash
- Metals
- Bacteria
- Oil and Grease
- Organics
- Oxygen Demanding

GILSON ENGINEERING
Consulting Engineers & Surveyors
(340) SOUTH 450 EAST BUILDING C, UNIT 2, DRAPER, UT 84020
PHONE: (801) 571-5414 FAX: (801) 571-5443

POWDER MOUNTAIN WATER AND SEWER IMPROVEMENT DISTRICT

REVISIONS

REV	DATE	BY	COMMENTS

1" SCALE MEASURES 1" ON FULL SIZE SHEET
ADJUST FOR HALF SIZE SHEETS

DATE: MARCH 2021
DRAWING NAME: BMP DETAILS
DESIGNED/DRAWN BY: JM/BP
CHECKED: ---
APPROVED: ---

BMP DETAILS

350,000 GALLON CULINARY WATER TANK
POWDER MOUNTAIN WATER & SEWER IMPROVEMENT DISTRICT
WEBER COUNTY, UTAH

REVISION:

PROJ. # POW.010

ER.103

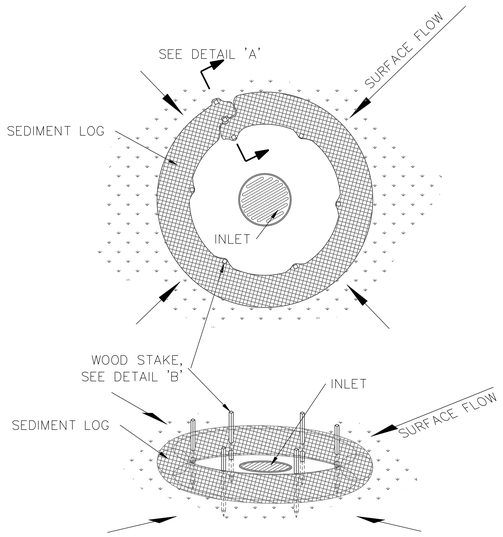

INLET

INLET PROTECTION (3 / C.05)
SCALE: NTS

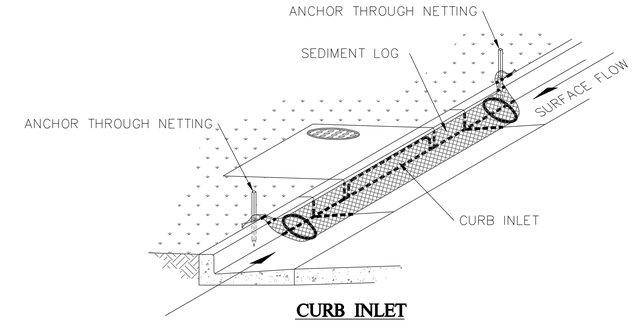

CURB INLET

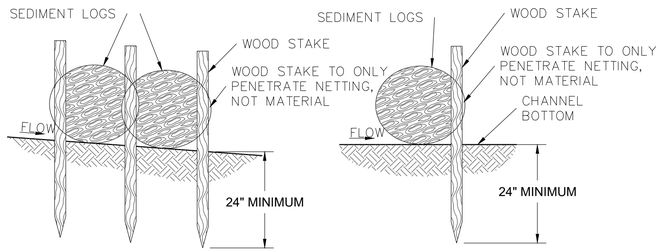

STAKING 'A' **STAKING 'B'**

GILSON ENGINEERING
Consulting Engineers & Surveyors
(340) SOUTH 450 EAST BUILDING C, UNIT 2, DRAPER, UT 84020
PHONE: (801) 571-3414 FAX: (801) 571-3449

POWDER MOUNTAIN WATER AND SEWER IMPROVEMENT DISTRICT

REVISIONS

REV	DATE	BY	COMMENTS

1" SCALE MEASURES 1" ON FULL SIZE SHEET
ADJUST FOR HALF SIZE SHEETS
0 1"

DATE: MARCH 2021
DRAWING NAME: ER.104 BMP DETAILS
DESIGNED/DRAWN BY: JM/BP
CHECKED: ---
APPROVED: ---

BMP DETAILS

350,000 GALLON CULINARY WATER TANK
POWDER MOUNTAIN WATER & SEWER IMPROVEMENT DISTRICT
WEBER COUNTY, UTAH

REVISION:

PROJ. # POW.010

ER.104